SPBT2532C2.AT

Bluetooth® technology class-2 module

Preliminary data

Features

- Bluetooth® specification compliant V2.1
- Output power class-2
- Transmission rate up to 2 Mbps with EDR
- Point-to-point
- Packet types supported:
  - ACL: DM1, DM3, DM5, DH1, DH3, DH5, 2-DH1, 2-DH3, 2-DH5
- Adaptive frequency hopping (AFH)
- Efficient and flexible support for WLAN coexistence in collocated scenario
- Communication interfaces: (a)
  - Fast UART up to 3.25 Mbit/s
  - SPI interface
  - I^2C interface
  - I^2S interface
- General I/O: (a)
  - 4 general purpose I/O
  - 4 x 12-bit A/D input
- User interface:
  - AT command set
- Memory:
  - 256 Kbytes Flash memory
  - 48 Kbytes RAM memory
- 3.3 V single supply voltage
- No external oscillator required
- Module size: 10 x 13 mm

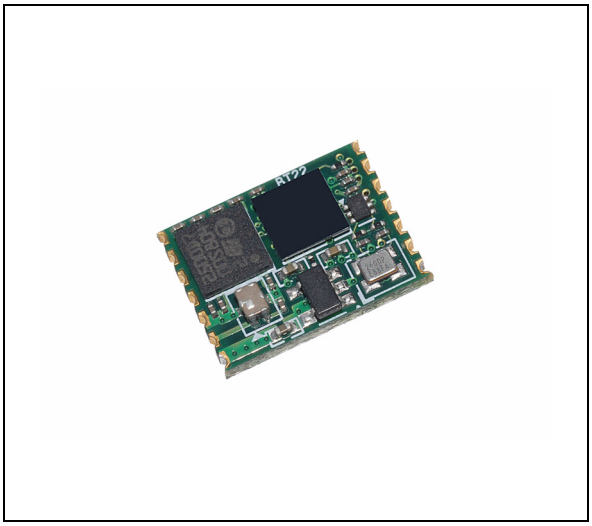

Description

The SPBT2532C2.AT is a surface-mount PCB module that provides fully embedded, ready-to-use Bluetooth wireless technology. It is designed for maximum performance in a minimal space and includes 4 general purpose (a) and 4 A/D IO lines (a), several serial interface options (a), and up to 2 Mbps data throughput.

The re-programmable Flash memory contains embedded firmware for serial cable replacement using the Bluetooth SPP profile.

a. All these resources cannot coexist at the same time; they are shared on the 8 pins available for interface. Standard configuration for AT command set is 4 pins for UART and 4 pins for GPIO.

This is preliminary information on a new product now in development or undergoing evaluation. Details are subject to change without notice.

www.st.com

Contents

1 RoHS compliance 7

2 Application 7

3 Block diagram 8

4 Electrical characteristics 9

4.1 Absolute maximum ratings 9

4.2 Operating ranges 9

4.3 Power consumption 10

4.4 DC I/O specification 10

5 Bluetooth parameters 11

5.1 RF performance characteristics 11

6 Pin settings 12

6.1 Pin connections 12

6.2 Pin description 13

7 Software architecture 14

7.1 Lower layer stack 15

7.2 Upper layer stack: amp'ed UP 15

7.3 AT command set: abSerial 15

8 Hardware design 16

8.1 Component drawing 16

8.2 UART interface 17

8.3 Typical circuit 17

9 Soldering 18

Appendix A Certifications 19

A.1 FCC compliance 19

Appendix B 20
B.1 Purpose 20
B.2 Definitions and acronyms 20
B.3 Overview 21
B.4 abSerial interface overview 21
B.5 Factory defaults 22

Appendix C Commands 23
C.1 Bond 24
C.1.1 Syntax 24
C.1.2 Responses 24
C.2 Build 25
C.2.1 Syntax 25
C.2.2 Responses 25
C.3 Bypass 25
C.3.1 Syntax 25
C.3.2 Responses 25
C.4 ChangeBaud 25
C.4.1 Syntax 25
C.4.2 Responses 26
C.5 ChangeDefaultBaud 26
C.5.1 Syntax 26
C.5.2 Responses 27
C.6 DefaultLocalName 27
C.6.1 Syntax 27
C.6.2 Responses 27
C.7 DeleteSmartCable 27
C.7.1 Syntax 27
C.7.2 Responses 27
C.8 DisableBond 28
C.8.1 Syntax 28
C.8.2 Responses 28
C.9 Discovery 28
C.9.1 Syntax 28
C.9.2 Responses 28

C.10 DUNConnect . . . 28
C.10.1 Syntax . . . 29
C.10.2 Responses . . . 29
C.11 DUNDisconnect . . . 29
C.11.1 Syntax . . . 29
C.11.2 Responses . . . 29
C.12 EnableBond . . . 29
C.12.1 Syntax . . . 30
C.12.2 Responses . . . 30
C.13 EraseBondTable . . . 30
C.13.1 Syntax . . . 30
C.13.2 Responses . . . 30
C.14 ExitPark . . . 30
C.14.1 Syntax . . . 31
C.14.2 Responses . . . 31
C.15 ExitSniff . . . 31
C.15.1 Syntax . . . 31
C.15.2 Responses . . . 31
C.16 GPIOConfig . . . 31
C.16.1 Syntax . . . 31
C.16.2 Responses . . . 31
C.17 GPIORead . . . 31
C.17.1 Syntax . . . 31
C.17.2 Responses . . . 32
C.18 GPIOWrite . . . 32
C.18.1 Syntax . . . 32
C.18.2 Responses . . . 32
C.19 Hold . . . 32
C.19.1 Syntax . . . 32
C.19.2 Responses . . . 32
C.20 HostEvent . . . 32
C.20.1 Syntax . . . 32
C.20.2 Responses . . . 33
C.21 LocalName . . . 33
C.21.1 Syntax . . . 33
C.21.2 Responses . . . 33

C.22 Park . . . 33
C.22.1 Syntax . . . 33
C.22.2 Responses . . . 33
C.23 RemoteCommand . . . 33
C.23.1 Syntax . . . 34
C.23.2 Responses . . . 34
C.24 RemoteCmdDisconnect . . . 34
C.24.1 Syntax . . . 34
C.24.2 Responses . . . 34
C.25 Reset . . . 34
C.25.1 Syntax . . . 34
C.25.2 Responses . . . 34
C.26 Security . . . 35
C.26.1 Syntax . . . 35
C.26.2 Responses . . . 35
C.27 SmartCableSetup . . . 35
C.27.1 Syntax . . . 35
C.27.2 Responses . . . 35
C.28 Sniff . . . 36
C.28.1 Syntax . . . 36
C.28.2 Responses . . . 36
C.29 SPPConnect . . . 36
C.29.1 Syntax . . . 36
C.29.2 Responses . . . 36
C.30 SPPDisconnect . . . 36
C.30.1 Syntax . . . 36
C.30.2 Responses . . . 36
C.31 StreamingSerial . . . 37
C.31.1 Syntax . . . 37
C.31.2 Query . . . 37
C.31.3 Responses . . . 37
C.32 UpdateInquiryScan . . . 37
C.32.1 Syntax . . . 37
C.32.2 Responses . . . 37
C.33 UpdatePageScan . . . 38
C.33.1 Syntax . . . 38

C.33.2 Responses . . . 38
C.34 Version . . . 38
C.34.1 Syntax . . . 38
C.34.2 Responses . . . 38

Appendix D Error responses . . . 39
D.1 ErrConnect . . . 39
D.2 ErrExecution . . . 40
D.3 ErrFormat . . . 40
D.4 ErrInvalidParam . . . 41
D.5 ErrNumParam . . . 41
D.6 ErrUnknownCmd . . . 42
D.7 ErrInProgress . . . 42
D.8 Commands and associated errors . . . 43

Appendix E Other responses . . . 44
E.1 Reset . . . 44
E.2 Escape sequence . . . 44
E.3 Controlled disconnect . . . 44
E.4 Unexpected disconnect . . . 45

Ordering information scheme . . . 46

Revision history . . . 47

1 RoHS compliance

ST modules are RoHS compliant and being based on ST devices comply with ECOPACK® norms implemented by ST.

2 Application

- Serial cable replacement
- Industrial control
- Medical
- POS terminals
- Data acquisition equipment
- Internet access points
- Machine control
- Sensor monitoring
- Robotic and bionic control
- Security control
- Patient monitoring
- Wireless printers
- Cordless terminals
- Laptops, PCs and accessories
- Handheld devices and accessories
- HID devices (keyboard, mouse, joystick, game controller…)

3 Block diagram

Figure 1. Block diagram

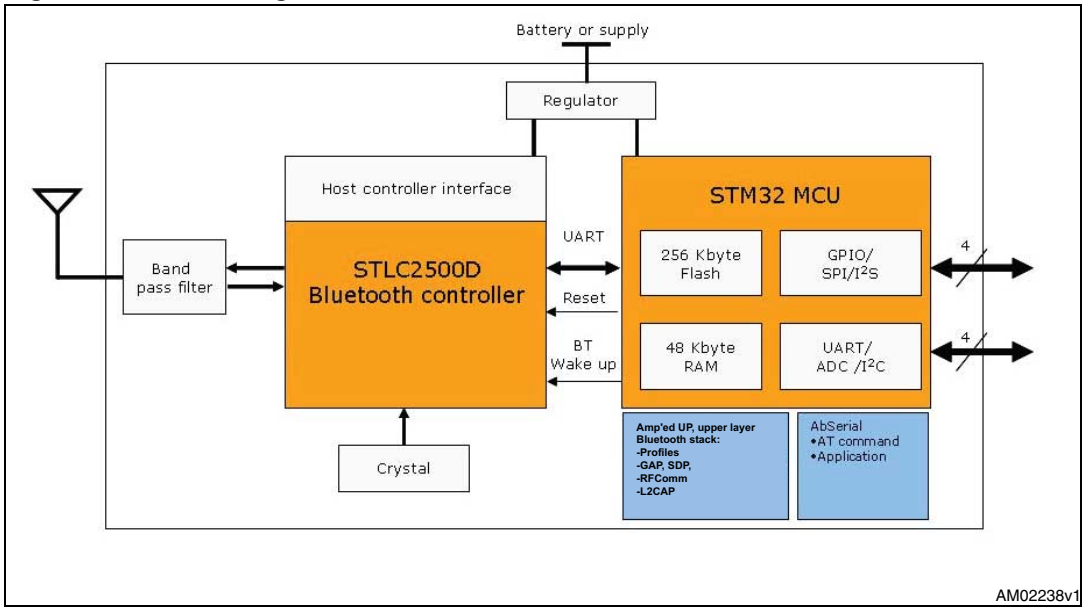

4 Electrical characteristics

4.1 Absolute maximum ratings

Table 1. Absolute maximum ratings

Rating	Min	Typ	Max	Unit
Storage temperature range	-55	-	+105	C
Supply voltage, V_{IN}	-0.3	-	+ 5.0	V
RF input power	-	-	+10	dBm
Input voltage on 5 V tolerant pin	-0.3	-	+5.5	V
Input voltage on non-5 V tolerant pin	-0.3	-	+4.0	V

4.2 Operating ranges

Operating ranges define the limits for functional operation and parametric characteristics of the module.

Functionality outside these limits is not implied

Table 2. Operating ranges

Rating	Min	Typ	Max	Unit
Operating temperature range	-40	-	85	°C
Supply voltage V_{IN}	2.8	3.0	3.6	V
Signal pin voltage	-	3.0	-	V
RF frequency	2400	-	2483.5	MHz

4.3 Power consumption

- CPU 32 MHz
- UART supports up to 921 Kbps
- Data throughput up to 2 Mbps

Table 3. High speed CPU mode

Modes	Avg	Unit
Typical power consumption		
ACL data 115 KBaud UART at max throughput (Master)	41.0	mA
ACL data 115 KBaud UART at max throughput (Slave)	41.0	mA
Connection, no data traffic, master	28.9	mA
Connection, no data traffic, slave	34.5	mA
Standby, and page/inquiry scan, without deep sleep	28.0	mA
Standby, and page/inquiry scan, with deep sleep	3.1	mA
Connection, sniff 375ms (600 slots), master	4.2	mA
Connection, sniff 375ms (600 slots), slave	8.1	mA

4.4 DC I/O specification

Table 4. DC input / output specification

Symbol	Parameter	Conditions	Min	Max	Unit
V_{IL}	Low-level input voltage	V_{IN} = 3.0 V (pin 8)	-	0.9	V
V_{IH}	High-level input voltage	V_{IN} = 3.0 V (pin 8)	2.1	-	
V_{OL}	Low-level output voltage	V_{IN} = 3.0 V (pin 8)	-	0.4	
V_{OH}	High-level output voltage	V_{IN} = 3.0 V (pin 8)	2.2	-	
I_{OL}	Low-level output current	V_{OL} = 0.4 V	-	4.0	mA
I_{OH}	High-level output current	V_{OH} = 2.2 V	-	4.0	
R_{PU}	Pull-up resistor	Resistor turned on	80	120	kΩ
R_{PD}	Pull-down resistor	Resistor turned on	80	120	

5 Bluetooth parameters

5.1 RF performance characteristics

In the performance characteristics table the following applies:

- Test condition: nominal
- Voltage: typical, V_{IN} = 3.0 V
- Temperature: typical T_A = 25 °C

Table 5. RF performance characteristics

Parameters	Conditions	BT spec	Typical	Unit
Antenna load			50	Ω
Radio receiver				
Sensitivity level	BER < 0.001 with DH5	-70	-85	dBm
Maximum usable level	BER < 0.001 with DH1	-20	+8	dBm
Input VSWR			2.5:1	
Radio transmitter				
Output power	50 load	-6 to +4	+2	dBm
Initial carrier frequency tolerance		±75	±30	kHz
20 dB bandwidth for modulated carrier		≤1000	930	kHz

Note: For more complete data, please refer to STM STLC2500D datasheet.

6 Pin settings

6.1 Pin connections

Figure 2. Pin connection diagram

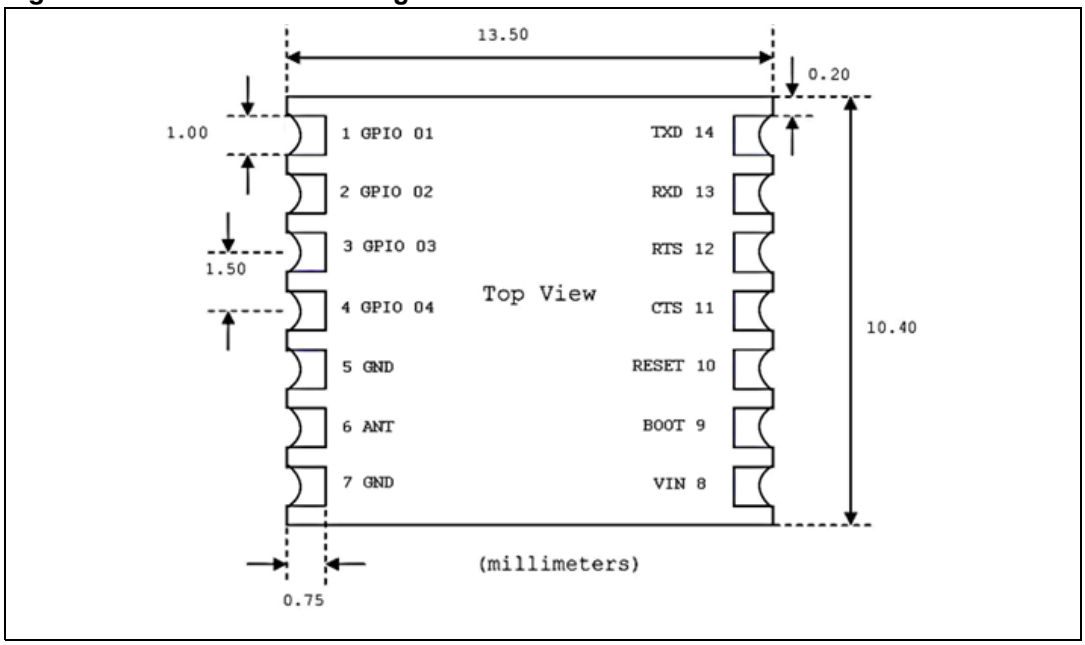

6.2 Pin description

Table 6. Pin description

Pin n°	Name	Type	Description	ALT function
UART interface				
13	RXD	I	Receive data	ADC3 (1)
14	TXD	O	Transmit data	ADC2
11	CTS	I	Clear to send (active low)	ADC0/I^{2}C Data/Aux Uart Rx
12	RTS	O	Request to send (active low)	ADC1/I^{2}C Clock/Aux Uart Tx
Antenna				
6	ANT	RF I/O	50 Ω Rx/Tx antenna port	
Reserved				
9	Reserved	I	Boot 0	
Power and ground				
8	V_{in}		V_{in}	
5, 7	GND		GND	
Reset				
10	RESETN	I	Reset input (active low for 5 ms);	
GPIO – general purpose input/output				
1	GPIO [1]	I/O	General purpose input/output	SPI MISO
2	GPIO [2]	I/O	General purpose input/output	SPI MOSI/I^{2}S_SD
3	GPIO [3]	I/O	General purpose input/output	SPI SCLK/ I^{2}S_CK
4	GPIO [4]	I/O	General purpose input/output	SPI SS/I^{2}S_WS

1. ADC pin functions are not 5V tolerant, when used as ALT pin function. Otherwise the I/O pins are all 5V tolerant.

7 Software architecture

The SPBT2532C2.AT includes the Bluetooth full protocol stack with upper layers and profiles.

Figure 3. Bluetooth firmware implementation

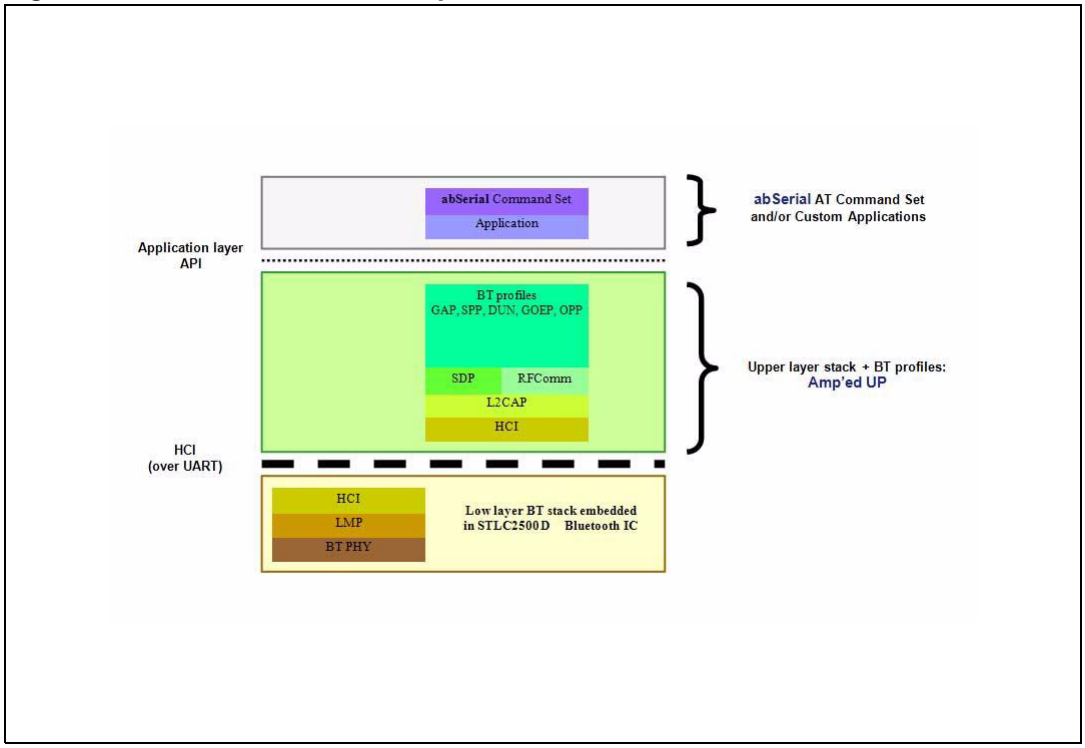

7.1 Lower layer stack

- Full Bluetooth v2.1 data rate (3M bps maximum)
- Device power modes—active, sleep and deep sleep
- Wake on Bluetooth feature—optimized power consumption of host CPU
- Authentication and encryption
- Encryption key length from 8-bits to 128-bits maximum
- Persistent Flash memory—for BD Address and radio parameter storage
- ACL (Asynchronous Connection Less) packet types (DM1, DH1, DM3, DH3, DM5, DH5, 2-DH1, 2-DH3, 2-DH5)
- Point to point support
- Park, sniff, and hold modes—fully supported to maximum allowed intervals (see *Appendix B:*)
- Master slave switch—supported during connection and post connection
- Dedicated inquiry access code—for improved inquiry scan performance
- Dynamic packet selection—channel quality driven data rate to optimize link performance
- Dynamic power control—interference reduction and link performance
- Bluetooth test modes—per Bluetooth v2.0 specification
- 802.11b/g co-existence—AWMA and AFH
- Vendor specific HCI commands—to support device configuration and certification test modes

7.2 Upper layer stack: amp'ed UP

- SPP, SDAP, GAP protocols
- RFComm, SDP, and L2CAP supported

7.3 AT command set: abSerial

- Please see *Appendix B: abSerial reference guide* for details

8 Hardware design

Notes:

- All unused pins should be left floating; do not ground.
- All GND pins must be well grounded.
- Traces should not be routed underneath the module.

8.1 Component drawing

Figure 4. Pin placement

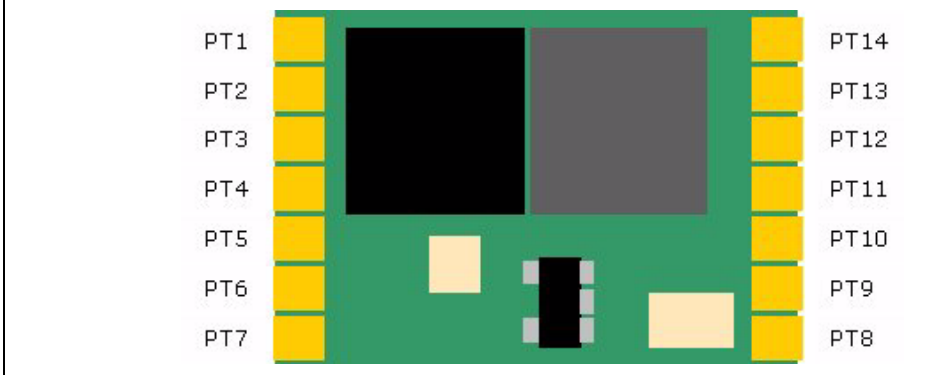

Figure 5. Ground plane diagram

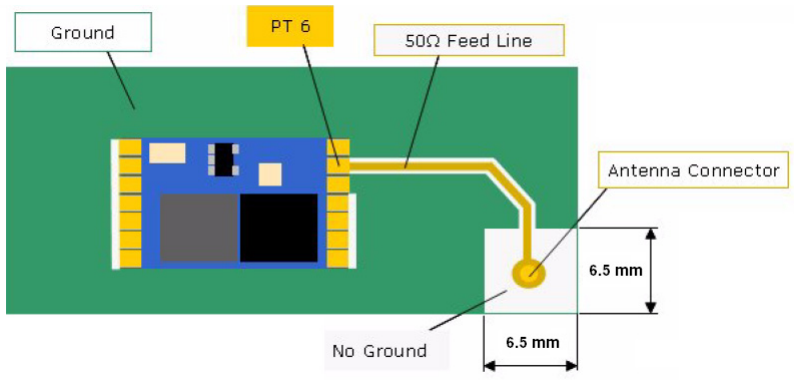

8.2 UART interface

The UART is compatible with the 16550 industry standard. Four signals are provided with the UART interface. The TXD and RXD pins are used for data while the CTS and RTS pins are used for flow control.

Figure 6. Connection to host device

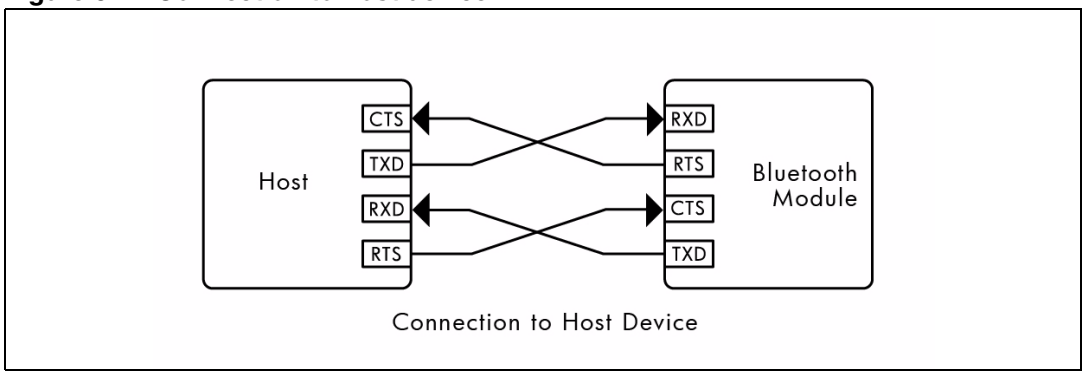

8.3 Typical circuit

Figure 7. Typical RS232 circuit

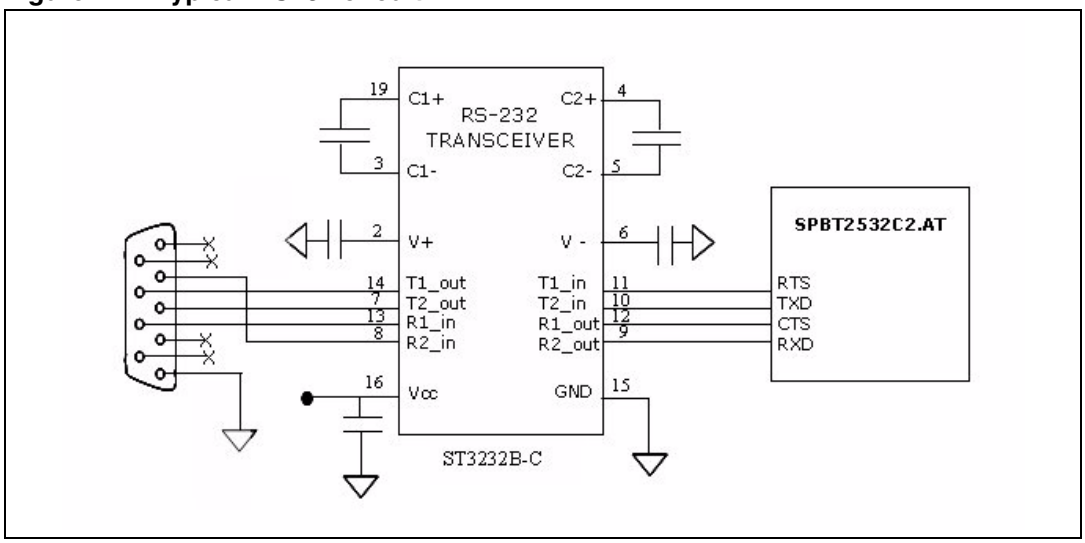

9 Soldering

Soldering phase has to be executed with care: In order to avoid undesired melting phenomenon, particular attention has to be taken on the set up of the peak temperature.

Here following some suggestions for the temperature profile based on

IPC/JEDEC J-STD-020C, July 2004 recommendations.

Table 7. Soldering

Profile feature	PB-free assembly
Average ramp up rate (T_{SMAX} to T_P)	3°C / sec max
Preheat Temperature min (T_S min) Temperature max (T_S max) Time (t_S min to t_S max) (t_S)	 150 °C 200 °C 60-100 sec
Time maintained above: Temperature T_L Time t_L	 217 °C 60-70 sec
Peak temperature (T_P)	240 + 0 °C
Time within 5 °C of actual peak temperature (t_P)	10-20 sec
Ramp down rate	6 °C / sec
Time from 25 °C to peak temperature	8 minutes max

Figure 8. Soldering

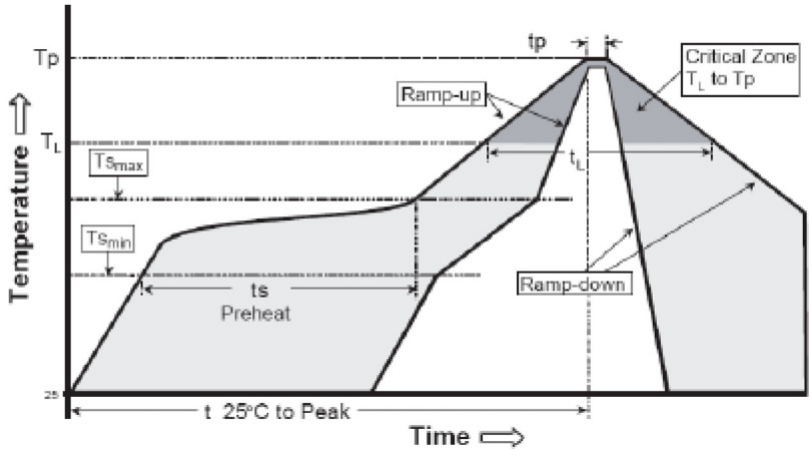

Appendix A Certifications

A.1 FCC compliance

FCC licensing is dependent on final antenna implementation. Many tests do not need to be repeated for final compliance and certification.

Appendix B

The appendix describes an embedded application that provides a serial cable replacement service using the Bluetooth serial port profile.

B.1 Purpose

This document provides a detailed description of each command supported by the AT command interface, (abSerial) SW developed by Amp'edRF.

Figure 9. SW developer



Each description explains parameters and the expected behaviors of each command and response.

Errors responses are also detailed in this document.

To provide feedback or to request assistance on abSerial commands please contact abserial.support@st.com

B.2 Definitions and acronyms

The following acronyms are used in this document.

Table 8. Definitions and acronyms

Term	Description/Meaning
ASCII	American standard code for information Interchange, a standard describing encoding of characters; the use in this document is strictly US 7-bit
BD	Bluetooth device
DCD	Modem signal “data carrier detect”; indication from a modem that a connection has been made through, for example, a dialup connection
DTE	Data terminal entity, e.g., a computer
DTR	Modem signal “data terminal ready”; indication to a modem that the data terminal is ready for a connection
DUN	Dialup networking (profile)
GPIO	General purpose input-output
LAN	Local area network
PIN	Personal identification number
SPP	Serial port profile
UART	Universal asynchronous receiver-transmitter

B.3 Overview

This chapter gives a basic overview of the abSerial interface. For further information, please refer to the abserial user guide.

B.4 abSerial interface overview

abSerial is a cable replacement application that provides point-to-point communication between two Bluetooth devices. A serial port is used to communicate with a host device through an AT command interface as shown below.

Figure 10. Communications between hosts

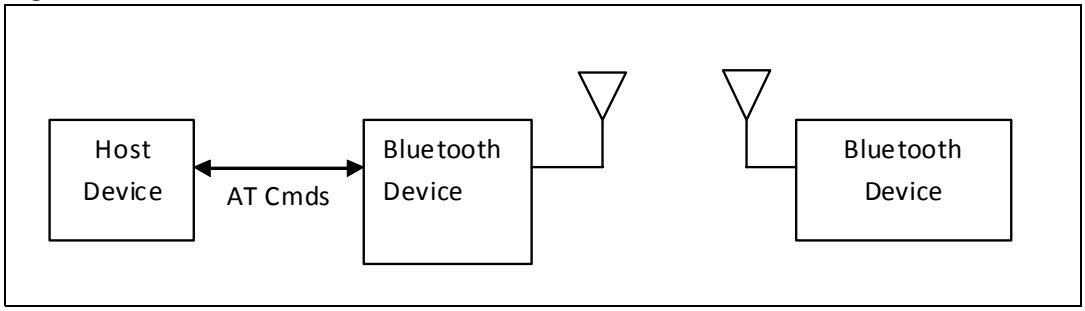

abSerial provides the following basic features:

- Point-to-point connection – abSerial only supports a connection with one device at a time.
- Optional MultiPoint applications are available upon request
- Serial port profile – SPP is supported with abSerial for both Client and Server application.
- Optional dial up networking – DUN profile support for Client applications (DUN Server is not currently supported).
- Optional OBEX profiles are available upon request
- Command and bypass modes – it is possible to switch between command and bypass (data transmit/receive) modes during an active connection
- Security – Bonding and data encryption provides a secure link between two devices.
- Multiple device bonding – special security keys can be exchanged with multiple devices to allow different devices to securely connect with abSerial.
- Power conservation – use of the sniff feature to minimize power consumption.
- Variable baud rates – the serial port can be configured for the following baud rates: 1200, 2400, 4800, 9600, 19.2k, 38.4k, 57.6k, 115.2k (default), 230.4k, 460.8k, 921.6k

B.5 Factory defaults

- The follow factory defaults are typically shipped with our standard products. Customized defaults may be ordered upon request.
- UART: 115200 baud, no parity, 1 stop bit, 8 data bits
- Local name: “Amp’ed UP!”
- Class of device: misc device
- Profile: SPP (serial port profile)
- Service name: “AMP-SPP”
- Deep sleep: disabled
- Page and inquiry scan: 1.28 s interval, 11 ms duration
- Security: disabled
- Bonding PIN: “1234”
- Bonding allowed: always enabled

Appendix C Commands

This chapter details the each of the abSerial AT commands including brief descriptions of behavior, syntax of the command, context of the command, and types of responses.

This abSerial reference guide covers the following commands:

Table Key:

√ – command is supported in this release

X – command not supported in this release

Table 9. abSerial command summary

Command	abSerial v1.1
Bond	√
Build	√
Bypass	√
ChangeBaud	√
ChangeDefaultBaud	√
DefaultLocalName	√
DeleteSmartCable	√
DisableBond	√
Discovery	√
DunConnect	x
DunDisconnect	x
EnableBond	√
EraseBondTable	√
ExitPart	√
ExitSniff	√
GPIOConfig	√
GPIORead	√
GPIOWrite	√
Hold	√
HostEvent	√
LocalName	√
Park	√
RemoteCommand	√
RemoteCmdDisconnect	√
Reset	√

Table 9. abSerial command summary (continued)

Command	abSerial v1.1
Security	√
SmartCableSetup	√
Sniff	√
SPPConnect	√
SPPDisconnect	√
StreamingSerial	√
UpdateInquiryScan	√
UpdatePageScan	√
Version	√

The following subsections describe each of these commands in detail, including a description of behavior, syntax (including possible parameter values), and types of responses.

Some responses will not be “immediate”. Where applicable, these will be noted and will include an approximate delay before response.

For commands with optional parameters, all possible forms will be listed under the syntax subsection.

Error responses are described in *Appendix D* error responses.

C.1 Bond

The Bond command is used to initiate bonding with a specified device. A personal identification number (PIN) is also required with this command.

C.1.1 Syntax

```
AT+AB Bond [BD addr] [PIN]
```

Where `[BD addr]` is the BD Address of the remote device with which to bond and `[PIN]` is the PIN code to use (up to 16 characters).

C.1.2 Responses

If the request is successfully submitted, the response is:

```
AT-AB BondPending [BD addr]
```

If the operation is successful, the response is:

```
AT-AB BondOk
```

If the operation fails, the response is:

```
AT-AB BondFail
```

C.2 Build

The version command is used to return the current version of the abSerial interface.

C.2.1 Syntax

```
AT+AB Build
```

C.2.2 Responses

If the operation is successful, the response is:

```
AT-AB abSerial Build [date]
```

where `[date]` is the date code of the application firmware.

C.3 Bypass

The Bypass command is used to return the abSerial interface to the bypass mode, if a connection is still available. The possible use for this is to change a setting after a connection has been made (such as the UART baud rate). If the abSerial interface does not have a connection, it will respond as if the connection is down.

C.3.1 Syntax

```
AT+AB Bypass
```

C.3.2 Responses

If a connection is still available, the response is:

```
AT-AB -BypassMode-
```

If there is currently no connection, the response is:

```
AT-AB ConnectionDown
```

C.4 ChangeBaud

The host sends the ChangeBaud command in order to change the local UART speed to a new speed identified by the host. This setting will only remain in effect during the current session - until reset.

C.4.1 Syntax

```
AT+AB ChangeBaud [rate]
```

where `[rate]` is the new baud rate:

- 1200
- 2400
- 4800
- 9600
- 19,200
- 38,400
- 57,600
- 115,200
- 230,400
- 460,800
- 921,600

C.4.2 Responses

If the change is accepted, the response is:

```
AT-AB Baudrate Changed
```

The actual change will not occur until the response has been completely transmitted.

C.5 ChangeDefaultBaud

The host sends the ChangeDefaultBaud command in order to change the default UART speed to a new speed identified by the host. This command is used to override the default baud rate from the Dynamic Configuration script so that the device does not require reprogramming to update this setting. The new baud rate is updated permanently until the device is either re-programmed or another ChangeDefaultBaud command is issued. The baud rate specified in the command will not take effect until the device is reset. To change the baud rate of the current session, use the ChangeBaud command.

C.5.1 Syntax

```
AT+AB ChangeDefaultBaud [rate]
```

where `[rate]` is the new baud rate:

- 1200
- 2400
- 4800
- 9,600
- 19,200
- 38,400
- 57,600
- 115,200
- 230,400
- 460,800
- 921,600

C.5.2 Responses

If the change is accepted, the response is:

```
AT-AB Baudrate Changed
```

C.6 DefaultLocalName

The DefaultLocalName command is used to set the name of the device to the name that is reported during device discoveries. By default, the abSerial interface uses “Amp’edBTDevice”. Changing the name using this command will permanently change the local name, unlike the LocalName command.

C.6.1 Syntax

```
AT+AB DefaultLocalName [name]
```

Where `[name]` is a string for the new local name (up to 50 characters). The space character is allowed; the name is assumed to be all text up to the end of the command.

C.6.2 Responses

If the operation is successful, the response is:

```
AT-AB LocalNameOk
```

C.7 DeleteSmartCable

The DeleteSmartCable command removes the current Smart Cable settings that were entered using the SmartCableSetup command, but not the setting from the dynamic configuration. The Smart Cable will then be deactivated for the remainder of this session. Upon reset, if a dynamic configuration for a Smart Cable exists, it will be activated. If there is no dynamic configuration Smart Cable setup, then this feature will remain deactivated.

C.7.1 Syntax

```
AT+AB DeleteSmartCable
```

C.7.2 Responses

If the operation is successful, the response is:

```
AT-AB DeleteSmartCableDone
```

C.8 DisableBond

The DisableBond command is used to disallow new bonding with a device.

This command cannot be used while a connection is active.

C.8.1 Syntax

```
AT+AB DisableBond
```

C.8.2 Responses

If the operation is successful, the response is:

```
AT-AB BondDisabled
```

C.9 Discovery

The Discovery command is used to initiate a device discovery. The command will return the number of responses of nearby devices and then the individual responses with BD address, name of device. The number of devices returned is limited to 10.

Inquiry is performed with an interval of 10.24 seconds.

The devices are reported in the same order as the original inquiry results.

C.9.1 Syntax

```
AT+AB Discovery
AT+AB Discovery [CoD]
AT+AB Discovery [CoD] [profile] [include service enable/disable]
```

C.9.2 Responses

When the discovery command has been accepted, the response is:

```
AT-AB InqPending
```

Once the initial inquiry is complete and discovery has been started, the response is:

```
AT-AB DiscoveryPending [num]
```

where `[num]` is the number of devices found, in decimal (up to 10 will be reported).

For each name or service name request that is successful, the response uses the returned names in the following format.

```
AT-AB Device [BD addr] [name]
AT-AB Device [BD addr] Unknown
```

C.10 DUNConnect

The DUNConnect command is used to initiate a connection with the specified device. The remote BD address must be specified. The remote Service is optional. If not specified, the first registered DUN service will be used by default.

C.10.1 Syntax

```
AT+AB DUNConnect [BD Addr] [Service]
```

Where `[BD Addr]` is the remote devices BD Address to page . `[Service]` is the specific service on the remote device; optional.

C.10.2 Responses

If the connection is successful, the response is:

```
AT-AB ConnectionUp
```

```
AT-AB -BypassMode-
```

If the connection cannot be completed, the response is:

```
AT-AB DUNConnectionClosed
```

C.11 DUNDisconnect

The DUNDisconnect command is used to terminate a connection with the remote device.

C.11.1 Syntax

```
AT+AB DUNDisconnect
```

C.11.2 Responses

If the connection is successful, the response is:

```
AT-AB DUNConnectionClosed
```

C.12 EnableBond

The EnableBond command is used to enable bonding with another device. The BD Address, PIN and timeout parameters are optional.

When no BD Address is specified, requests from all BD Addresses are allowed.

If a BD Address is specified, bonding requests from devices with BD Addresses other than the one specified will fail and the existing link key will be deleted for that device.

Optionally, a PIN code may be entered with this command. If no PIN code is specified, the default PIN code will be used. The default PIN code is either the last 4 digits of the device's BD address or the dynamically configured PIN code, depending on the default PIN selection in the dynamic configuration file.

Also, a timeout value, in seconds, may be entered after the PIN code. Bonding will be disabled automatically after the requested timeout. If no timeout is specified, bonding is enabled until reset or until the DisableBond command is used.

If this command is issued multiple times, only the last PIN and BD address are saved. Also, if this command is issued before the first timeout occurs, the subsequent command will extend the timeout. The timeout is always set to the specified time beyond the last received EnableBond.

C.12.1 Syntax

```
AT+AB EnableBond
AT+AB EnableBond [BD addr]
AT+AB EnableBond [BD addr] [PIN]
AT+AB EnableBond [BD addr] [PIN] [timeout]
```

Where `[BD addr]` is the BD Address of the remote device with which to bond, `[PIN]` is the PIN code to use (up to 16 characters), and `[timeout]` is the duration of the timeout in seconds (1 to 14,400, in decimal).

C.12.2 Responses

If the operation is successful, the response is:

```
AT-AB BondEnabled
```

If bonding has been initiated by a remote device, the notification is:

```
AT-AB BondPending [BD addr]
```

where `[BD addr]` is the BD address of the remote device that initiated the bonding.

If bonding has occurred, the notification is:

```
AT-AB BondOk [BD addr]
```

where `[BD addr]` is the BD address of the remote device with successful bonding.

If bonding was initiated by a remote device but failed, the notification is

```
AT-AB BondFail
```

When the time limit for bonding has expired, the notification is

```
AT-AB BondDisabled
```

C.13 EraseBondTable

The EraseBondTable command is used to erase all of the bonded device entries. Single devices cannot be erased with this command

C.13.1 Syntax

```
AT+AB EraseBondTable
```

C.13.2 Responses

If the operation is successful, the response is:

```
AT-AB BondTableErased
```

C.14 ExitPark

The **`ExitPark`** command is used to switch a device from park mode to active mode.

C.14.1 Syntax

```
AT+AB ExitPark [BD address]
```

Where `[BD address]` is the BD address of the device to be switched to active mode.

C.14.2 Responses

If the operation is successful, the response is:

```
AT-AB ActiveMode
```

C.15 ExitSniff

The ExitSniff command is used to switch a device from sniff mode to active mode.

C.15.1 Syntax

```
AT+AB ExitSniff [BD address]
```

Where `[BD address]` is the BD address of the device to be switched to active mode.

C.15.2 Responses

If the operation is successful, the response is:

```
AT-AB ActiveMode
```

C.16 GPIOConfig

The GPIOConfig command is used to configure a GPIO pin to input or output.

C.16.1 Syntax

```
AT+AB GPIOConfig [GPIO Pin] [Configuration]
```

Where `[GPIO Pin]` is the Pin number, 1 – 4, of the desired GPIO to configure. `[Configuration]` is i or I for input and o or O for output.

C.16.2 Responses

If the operation is successful, the response is:

```
AT-AB GPIOConfigDone
```

C.17 GPIORead

The GPIORead command is used to read a GPIO pin. A GPIO may be read while configured as either an input or output.

C.17.1 Syntax

```
AT+AB GPIORead [GPIO Pin]
```

Where `[GPIO Pin]` is the Pin number, 1 – 4, of the desired GPIO to read.

C.17.2 Responses

If the operation is successful, the response is:

```
AT-AB GPIOReadDone [result]
```

Where `[result]` is either a 1 to indicate high, or 0 to indicate low.

C.18 GPIOWrite

The GPIOWrite command is used to set a GPIO pin to high or low. A GPIO may only be set when configured as an output.

C.18.1 Syntax

```
AT+AB GPIOWrite [GPIO Pin] [Setting]
```

Where `[GPIO Pin]` is the Pin number, 1 – 4, of the desired GPIO to read. `[Setting]` is a 1 to set a pin to high and a 0 to set a pin to low.

C.18.2 Responses

If the operation is successful, the response is:

```
AT-AB GPIOWriteDone
```

C.19 Hold

The Hold command is used to switch a device from active mode to hold mode.

C.19.1 Syntax

```
AT+AB Hold [BD address] [Hold Duration]
```

Where `[BD address]` is the BD address of the device to be switched to active mode. `[Hold Duration]` is given in slots from 4-10,000.

C.19.2 Responses

If the operation is successful, the response is:

```
AT-AB HoldMode
```

C.20 HostEvent

The HostEvent command is used to enable/disable the host notification strings. This will override the default setting in the dynamic configuration only for the current session; until reset.

C.20.1 Syntax

```
AT+AB HostEvent [Enable/Disable]
```

Where `[Enable/Disable]` is an e or E character to enable this parameter and a d or D character to disable it.

C.20.2 Responses

If the feature is successfully enabled, the response is:

```
AT-AB HostEvent Enabled
```

If the feature is successfully disabled there is no response because the events have been disabled.

C.21 LocalName

The LocalName command is used to set the name of the device to the name that is reported during device discoveries. By default, the abSerial interface uses Amp'edBTDevice. Changing the name using this command does not permanently change the local name.

C.21.1 Syntax

```
AT+AB LocalName [name]
```

Where `[name]` is a string for the new local name (up to 50 characters). The space character is allowed; the name is assumed to be all text up to the end of the command.

C.21.2 Responses

If the operation is successful, the response is:

```
AT-AB LocalNameOk
```

C.22 Park

The Park command is used to switch a device from active mode to park mode.

C.22.1 Syntax

```
AT+AB Park [BD address] [Beacon Period]
```

Where `[BD address]` is the BD address of the device to be switched to active mode. `[Beacon Period]` is given in slots from 200-10,000.

C.22.2 Responses

If the operation is successful, the response is:

```
AT-AB ParkMode
```

C.23 RemoteCommand

The RemoteCommand command is used to enable/disable the remote command mode. This setting is stored in persistent memory, and will be retained after each reset. Additionally, the new setting will take effect upon the next device reset.

C.23.1 Syntax

```
AT+AB RemoteCommand [Enable/Disable]
```

Where `[Enable/Disable]` is an e or E character to enable this parameter and a d or D character to disable it.

C.23.2 Responses

If the feature is successfully applied, the response is:

```
AT-AB RemoteCommand [Enabled/Disabled]
```

C.24 RemoteCmdDisconnect

The RemoteCmdDisconnect command is used to disconnect a remote command connection. This command only applies to the server side of the link; the remote device. The client or local device, if using the abSerial interface, should use a SPPDisconnect command since it is not in Remote Command mode.

C.24.1 Syntax

```
AT+AB RemoteCmdDisconnect
```

C.24.2 Responses

If the operation is successful, the response is:

```
AT-AB RemoteCmdModeClosed
```

C.25 Reset

The Reset command is used to reset the abSerial interface. This is provided in the event that a host application wants to perform a software reset for error recovery. There is a response prior to reset to verify the command was received by the abSerial interface.

C.25.1 Syntax

```
AT+AB Reset
```

C.25.2 Responses

If the operation is successful, the response is:

```
AT-AB ResetPending
```

C.26 Security

The Security command is used to set the security level of the device in use. By default, security level none is used.

- Variable pin type (the pincode request event will always be received by the application from the stack), and
- 128-bit unit key.

Service level security, level 2, is not currently supported. The security setting is not preserved in non-volatile memory.

C.26.1 Syntax

```
AT+AB Security [level]
```

where `[level]` is the type of security to use:

- None
- Link (default)

C.26.2 Responses

If the operation is successful, the response is:

```
AT-AB SecurityOk
```

C.27 SmartCableSetup

The SmartCableSetup command is used enable and configure a Smart Cable device. A device's BD Address is specified with which to automatically establish a connection; replacing the need for AT connection commands. This command will override the dynamic configuration of a Smart Cable device until the DeleteSmartCable command is issued; it is saved in non-volatile memory.

C.27.1 Syntax

```
AT+AB SmartCableSetup [BD address] [Attempts] [Interval]
```

Where `[BD address]` is the BD address of the remote device to page and attempt to connect. `[Attempts]` 0 – 999 is the number of pages the will be attempted to the specified device until a connection is successful. A value of 0 will not automatically page the remote device, however, GPIO 7 may be asserted to manually send a page. A value of 1000 will perform unlimited pages until connected. be switched to active mode. `[Sniff Interval]` is given in slots from 66-10,000. [Interval] 1-1000 is the number of 100ms intervals (0.1sec to 100 sec) between page attempts. This interval is in addition to the amount of time required by the page attempt itself.

C.27.2 Responses

If the operation is successful, the response is:

```
AT-AB SmartCableConfigDone
```

C.28 Sniff

The Sniff command is used to switch a device from active mode to sniff mode.

C.28.1 Syntax

```
AT+AB Sniff [BD address] [Sniff Interval]
```

Where `[BD address]` is the BD address of the device to be switched to active mode. `[Sniff Interval]` is given in slots from 66-10,000.

C.28.2 Responses

If the operation is successful, the response is:

```
AT-AB SniffMode
```

C.29 SPPConnect

The SPPConnect command is used to initiate a connection with the specified device. The remote BD address must be specified. The remote Service is optional. If not specified, the first registered SPP service will be used by default.

C.29.1 Syntax

```
AT+AB SPPConnect [BD Addr] [Service]
```

Where `[BD Addr]` is the remote devices BD Address to page. `[Service]` is the specific service on the remote device; optional.

C.29.2 Responses

If the connection is successful, the response is:

```
AT-AB ConnectionUp
```

```
AT-AB -BypassMode-
```

If the connection cannot be completed, the response is:

```
AT-AB SPPConnectionClosed
```

C.30 SPPDisconnect

The SPPDisconnect command is used to terminate a connection with the remote device.

C.30.1 Syntax

```
AT+AB SPPDisconnect
```

C.30.2 Responses

If the connection is successful, the response is

```
AT-AB SPPConnectionClosed
```

C.31 StreamingSerial

C.31.1 Syntax

`AT+AB StreamingSerial [Enable/Disable]`

Where `[Enable/Disable]` is an e or E character to enable this parameter and a d or D character to disable it.

C.31.2 Query

An alternative syntax may be used to query the current StreamingSerial feature status. This syntax is not supported by other commands.

`AT+AB StreamingSerial`

C.31.3 Responses

If the feature is successfully applied or queried, the response is:

`AT-AB StreamingSerial [Enabled/Disabled]`

C.32 UpdateInquiryScan

The UpdateInquiryScan command is used to modify the Inquiry scan parameters: mode, duration, and interval.

C.32.1 Syntax

`AT+AB UpdateInquiryScan [mode] [duration] [interval]`

where `[mode]` is the discoverable mode:

- 0: non-discoverable
- 1: limited discoverability – not supported
- 2: discoverable

`[duration]` is the scan length in slots; 18 to 4096. The default duration is 18 slots.

`[interval]` is the period between scans in slots; 18 to 4096. The default interval is 2048 slots

C.32.2 Responses

If the command is successful, the response is:

`AT-AB InquiryScanUpdateDone`

C.33 UpdatePageScan

The UpdateInquiryScan command is used to modify the Page scan parameters: mode, duration, and interval.

C.33.1 Syntax

```
AT+AB UpdatePageScan [mode] [duration] [interval]
```

Where `[mode]` is the connectable mode:

- 0: non-connectable
- 1: connectable

`[duration]` is the scan length in slots; 18 to 4096. The default duration is 18 slots.

`[interval]` is the period between scans in slots; 18 to 4096. The default interval is 2048 slots

C.33.2 Responses

If the command is successful, the response is:

```
AT-AB PageScanUpdateDone
```

C.34 Version

The Version command is used to return the current version of the abSerial interface.

C.34.1 Syntax

```
AT+AB Version
```

C.34.2 Responses

If the operation is successful, the response is:

```
AT-AB abSerialVer [x.y]
```

where `[x.y]` is the current version of the abSerial Interface.

Appendix D Error responses

This chapter details the error responses that occur under specific circumstances.

There are seven error responses that can occur beyond error responses specific to a particular command (e.g., Discovery). They are:

- ErrConnect
- ErrExecution
- ErrFormat
- ErrInProgress
- ErrInvalidParam
- ErrNumParam
- ErrUnknownCmd

The following subsections detail the different error responses. These error responses replace the original error response

```
AT-AB ErrorCommand
```

D.1 ErrConnect

The ErrConnect error response will be sent if abSerial has a valid connection established and the command cannot be executed while connected (even in the command mode). Examples of commands that produce this error response are given in the following table.

Table 10. Example commands that generate <ErrConnect>

Example	Reason
AT+AB security none	Changing security level while a connection is up.
AT+AB discovery	Performing a device discovery while a connection is up.
AT+AB SPPConnect 00043e000000	Establishing a connection to a device while a connection is exists with another.

D.2 ErrExecution

The ErrExecution error response will be sent if the command cannot complete for any reason.

Examples of commands that produce this error response are given in the following table.

Table 11. Example commands that generate <ErrExecution>

Example	Reason
AT+AB security none	Execution of command with correct syntax failed
AT+AB discovery	Execution of command with correct syntax failed

D.3 ErrFormat

The ErrFormat error response will be sent if abSerial receives a command (text terminated by a carriage return or line feed) that does not match the expected format of starting with AT+AB .

Examples of commands that produce this error response are given in the following table.

Table 12. Example commands that generate <ErrFormat>

Example	Reason
AT-AB Discovery	A valid command name that does not start with the right prefix.
SPPConnect 00043e000000	A command does not start with AT+AB
abcdef	A command does not start with AT+AB

D.4 ErrInvalidParam

The ErrInvalidParam error response will be sent if the parameters for the requested command are not correct. The parameter(s) will be echoed back to the user starting from the parameter that was rejected.

Examples of commands that produce this error response are given in the following table.

Table 13. Example commands that generate <ErrInvalidParam>

Example	Response	Reason
AT+AB SPPConnect 8136	AT-AB ErrInvalidParam 8136	Numeric parameter not specified with required number of digits (BD address must always be 12 hex characters).
AT+AB SPPConnect 00043e008136 GOEP	AT-AB ErrInvalidParam goep	Unrecognized (or unsupported) symbolic parameter used.
AT+AB ChangeBaud 1600	AT-AB ErrInvalidParam 1600	Numeric parameter is out of range (specified baud rate is not supported by command).
AT+AB EnableBond 00043e000000 12345678901234567	AT-AB ErrInvalidParam 12345678901234567	String parameter (PIN)has too many characters.

D.5 ErrNumParam

The ErrNumParam error response will be sent if there are too few parameters for the requested command. A command sent with too many parameters does not generate an error; instead, the extra parameters are ignored.

Warning: Some commands will accept a variable number of parameters.

Examples of commands that produce this error response are given in the following table.

Table 14. Example commands that generate <ErrNumParam>

Example	Reason
AT+AB Security	No parameters were specified.
AT+AB Sniff	The minimum number of parameters was not specified.

D.6 ErrUnknownCmd

The ErrUnknownCmd error response will be sent if the requested command is not recognized. The unrecognized command will be echoed back to the host. Any parameters given will be ignored.

```
AT-AB ErrUnknownCmd [unrecognized command]
```

An accepted command always starts with the command identifier:

```
AT+AB
```

D.7 ErrInProgress

ErrInProgress is sent in response to Discovery command being issued when the previous one is still in progress.

```
AT+AB Discovery [unrecognized command]
```

Examples of commands that produce this error response are given in the following table:

Table 15. Example commands that generate <ErrInProgress>

Example	Reason
AT+AB Discovery	Trying to do discovery when the previous one has not completed.

D.8 Commands and associated errors

The table below summarizes which of the commands produce specific error responses. If a command can produce an error response, the column will be marked with an X.

Table 16. Possible ErrConnect error responses

Example	ErrInvalidParam	ErrNumParam	ErrExecute	ErrConnect	ErrInProgress
Bond	X	X	X		
Build					
Bypass					
ChangeBaud	X	X			
ChangeDefaultBaud	X	X			
DefaultLocalName		X	X		
DeleteSmartCable					
DisableBond					
Discovery	X	X	X		X
DUNConnect	X	X		X	
DUNDisconnect					
EnableBond	X	X	X		
EraseBondTable					
ExitPark	X		X		
ExitSniff	X		X		
GPIOConfig	X	X			
GPIORead	X				
GPIOWrite	X	X			
Hold	X	X	X		
LocalName		X	X		
Park	X	X	X		
RemoteCmdDisconnect					
Reset					
Security	X	X	X		
SmartCableSetup	X	X			
Sniff	X	X	X		
SPPConnect	X	X		X	
SPPDisconnect					
UpdateInquiryScan	X	X	X		
UpdatePageScan	X	X	X		
Version					

Appendix E Other responses

The following subsections describe the 4 types of responses that occur under specific circumstances, not necessarily as a result of a specific command. They are:

- Reset
- Escape sequence
- Controlled disconnect
- Unexpected disconnect

E.1 Reset

Upon either hardware reset or software reset (such as the Reset command), abSerial will respond as follows after the reset is complete:

```
AT-AB -CommandMode-
```

```
AT-AB BDAddress [BD addr]
```

Because the BD address of the local device is reported during this response, the response is different than a response to the Escape Sequence.

E.2 Escape sequence

If the Escape sequence, ^#^$^%, is received and no connection is active, abSerial will immediately respond with:

```
AT-AB -CommandMode-
```

When the Escape Sequence is received while a connection is still active and there is no data for 2 seconds, abSerial will respond (after those 2 seconds of no data) with the same string.

abSerial will now be in command mode.

E.3 Controlled disconnect

If the local host initiates a disconnect, it must first put the abSerial interface into command mode (see the section on Escape Sequence directly above). After a successful disconnect command, the following response is made:

```
AT-AB ConnectionDown
```

E.4 Unexpected disconnect

Bluetooth connections may be unexpectedly dropped (e.g., in changing RF conditions). Although it is generally assumed that a disconnect will be negotiated on the application level, the remote device may initiate a disconnect. When that happens, the disconnect may be unexpected. This section applies to both the general case and the unexpected disconnect.

It is useful for the local host to be notified that a connection has been terminated when it isn't controlling the termination. An unexpected disconnect is essentially defined as a disconnect that occurs while in bypass mode. If this happens, abSerial will respond with:

```
###NO CARRIER

AT-AB -CommandMode-
```

It is the responsibility of the host to prevent this string from appearing in the data stream during normal operation.

If a remote disconnect occurs during command mode, this notification string is also sent. It will not be sent, however, if an initial setup cannot be established or if the disconnect is requested by the local device.

Hardware handshaking is not used to indicate a disconnection in this implementation. Modems can use DCD (data carrier detect) to notify the DTE (data terminal entity, e.g., computer) that a connection is either available or unavailable.

Ordering information scheme

Table 17. Ordering information scheme

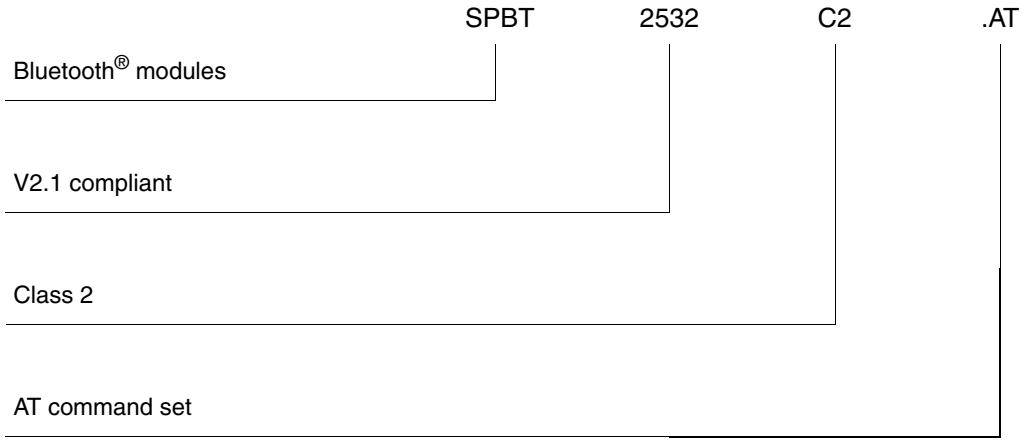

Note: No antenna on board

Revision history

Table 18. Document revision history

Date	Revision	Changes
07-Aug-2009	1	First release
04-Nov-2009	2	Updated *Figure 1*, *Table 3*, *Figure 2*, *Table 6* and *Chapter Appendix B*
24-Feb-2010	3	Updated *Chapter 4*, *Table 5*, *Appendix C* and *Table 9*

Please Read Carefully:

Information in this document is provided solely in connection with ST products. STMicroelectronics NV and its subsidiaries (“ST”) reserve the right to make changes, corrections, modifications or improvements, to this document, and the products and services described herein at any time, without notice.

All ST products are sold pursuant to ST’s terms and conditions of sale.

Purchasers are solely responsible for the choice, selection and use of the ST products and services described herein, and ST assumes no liability whatsoever relating to the choice, selection or use of the ST products and services described herein.

No license, express or implied, by estoppel or otherwise, to any intellectual property rights is granted under this document. If any part of this document refers to any third party products or services it shall not be deemed a license grant by ST for the use of such third party products or services, or any intellectual property contained therein or considered as a warranty covering the use in any manner whatsoever of such third party products or services or any intellectual property contained therein.

UNLESS OTHERWISE SET FORTH IN ST’S TERMS AND CONDITIONS OF SALE ST DISCLAIMS ANY EXPRESS OR IMPLIED WARRANTY WITH RESPECT TO THE USE AND/OR SALE OF ST PRODUCTS INCLUDING WITHOUT LIMITATION IMPLIED WARRANTIES OF MERCHANTABILITY, FITNESS FOR A PARTICULAR PURPOSE (AND THEIR EQUIVALENTS UNDER THE LAWS OF ANY JURISDICTION), OR INFRINGEMENT OF ANY PATENT, COPYRIGHT OR OTHER INTELLECTUAL PROPERTY RIGHT.

UNLESS EXPRESSLY APPROVED IN WRITING BY AN AUTHORIZED ST REPRESENTATIVE, ST PRODUCTS ARE NOT RECOMMENDED, AUTHORIZED OR WARRANTED FOR USE IN MILITARY, AIR CRAFT, SPACE, LIFE SAVING, OR LIFE SUSTAINING APPLICATIONS, NOR IN PRODUCTS OR SYSTEMS WHERE FAILURE OR MALFUNCTION MAY RESULT IN PERSONAL INJURY, DEATH, OR SEVERE PROPERTY OR ENVIRONMENTAL DAMAGE. ST PRODUCTS WHICH ARE NOT SPECIFIED AS "AUTOMOTIVE GRADE" MAY ONLY BE USED IN AUTOMOTIVE APPLICATIONS AT USER’S OWN RISK.

Resale of ST products with provisions different from the statements and/or technical features set forth in this document shall immediately void any warranty granted by ST for the ST product or service described herein and shall not create or extend in any manner whatsoever, any liability of ST.

ST and the ST logo are trademarks or registered trademarks of ST in various countries.

Information in this document supersedes and replaces all information previously supplied.

The ST logo is a registered trademark of STMicroelectronics. All other names are the property of their respective owners.

© 2010 STMicroelectronics - All rights reserved

STMicroelectronics group of companies

Australia - Belgium - Brazil - Canada - China - Czech Republic - Finland - France - Germany - Hong Kong - India - Israel - Italy - Japan - Malaysia - Malta - Morocco - Philippines - Singapore - Spain - Sweden - Switzerland - United Kingdom - United States of America

www.st.com