SPB-3620WG / SPB-3620BWG / SPB-3620AWG (SC BIDI SFP) (RoHS Compliant)

SPB-3620LWG / SPB-3620BLWG / SPB-3620ALWG (LC BIDI SFP)

1310 nm TX / 1550 nm RX , 3.3V / 155 Mbps Digital Diagnostic Single-Fiber SFP Transceiver

FEATURES

- 1-Fiber Bi-Directional SFP Optical Transceiver
- Compliant with IEEE 802.3ah-2004 100BASE-BX
- Simplex SC Connector: SPB-3620WG
- Simplex LC Connector: SPB-3620LWG
- SFF-8472 Digital Diagnostic Function
- 1310 nm LD Transmitter
- 1550 nm Receiver
- Distance Up to 20 km
- AC/AC Coupling according to MSA
- Single +3.3 V Power Supply
- RoHS Compliant
- 0 to 70°C Operating : SPB-3620WG
- -10 to 85°C Operating : SPB-3620BWG
- -40 to 85°C Operating : SPB-3620AWG
- Class 1 Laser International Safety Standard IEC 60825 Compliant

APPLICATIONS

- WDM Fast Ethernet Links
- SONET/SDH Equipment Interconnect
- Fiber Channel Links

DESCRIPTION

The SPB-3620WG series is small form factor pluggable module for IEEE 802.3ah 100BASE-BX and OC-3/STM-1 SONET/SDH single fiber communications by using 1310 nm transmitter and 1550 nm receiver. It is with the SFP 20-pin connector to allow hot plug capability. Digital diagnostic functions are available via an I^2C. The transmitter section uses a multiple quantum well 1310 nm laser and is a class 1 laser compliant according to International Safety Standard IEC 60825. The receiver section uses an integrated 1550 nm detector preamplifier (IDP) mounted in an optical header and a limiting post-amplifier IC.

LASER SAFETY

This single mode transceiver is a Class 1 laser product. It complies with IEC 60825 and FDA 21 CFR 1040.10 and 1040.11. The transceiver must be operated within the specified temperature and voltage limits. The optical ports of the module shall be terminated with an optical connector or with a dust plug.

ORDER INFORMATION

P/No.	Bit Rate (Mb/s)	Distance (km)	TX (nm)	RX (nm)	Package	Temp (°C)	TX Power (dBm)	RX Sens. (dBm)	RoHS Compliant
SPB-3620WG	125/155	20	1310	1550	SC SFP with DMI	0 to 70	-8 to -14	-33	Yes
SPB-3620BWG	125/155	20	1310	1550	SC SFP with DMI	-10 to 85	-8 to -14	-33	Yes
SPB-3620AWG	125/155	20	1310	1550	SC SFP with DMI	-40 to 85	-8 to -14	-33	Yes
SPB-3620LWG	125/155	20	1310	1550	LC SFP with DMI	0 to 70	-8 to -14	-33	Yes
SPB-3620BLWG	125/155	20	1310	1550	LC SFP with DMI	-10 to 85	-8 to -14	-33	Yes
SPB-3620ALWG	125/155	20	1310	1550	LC SFP with DMI	-40 to 85	-8 to -14	-33	Yes

OPTOWAY TECHNOLOGY INC. No.38, Kuang Fu S. Road, Hu Kou, Hsin Chu Industrial Park, Hsin Chu, Taiwan 303
Tel: 886-3-5979798 Fax: 886-3-5979737
E-mail: sales@optoway.com.tw http: // www.optoway.com.tw 1/1/2008 V3.0

Absolute Maximum Ratings					
Parameter	**Symbol**	**Min**	**Max**	**Units**	**Notes**
Storage Temperature	Tstg	-40	85	°C	
Operating Case Temperature	Topr	0	70	°C	SPB-3620WG
		-10	85		SPB-3620BWG
		-40	85		SPB-3620AWG
Power Supply Voltage	Vcc	0	3.6	V	
Input Voltage	---	GND	Vcc	V	
Output Current	Iout	0	30	mA	

Recommended Operating Conditions					
Parameter	**Symbol**	**Min**	**Typ**	**Max**	**Units / Notes**
Power Supply Voltage	Vcc	3.1	3.3	3.5	V
Power Supply Current	$I_{CC\ (TX+RX)}$		200	300	mA
Operating Case Temperature	Topr	0		70	°C / SPB-3620WG
		-10		85	°C / SPB-3620BWG
		-40		85	°C / SPB-3620AWG
Data Rate			125/155	200	Mb/s

Transmitter Specifications (0°C < Topr < 70°C, 3.1V < Vcc < 3. 5V)						
Parameter	**Symbol**	**Min**	**Typ**	**Max**	**Units**	**Notes**
Optical						
Optical Transmit Power	Po	-14	---	-8	dBm	1
Output Center Wavelength	λ	1260		1360	nm	
Output Spectrum Width	Δλ	---	---	5	nm	RMS (σ)
Extinction Ratio	E_R	8.2	---	---	dB	
Output Eye	Compliant with Bellcore GR-253-CORE and ITU recommendation G.957					
Optical Rise Time	t_r			2	ns	10% to 90% Values
Optical Fall Time	t_f			2	ns	10% to 90% Values
Relative Intensity Noise	RIN			-116	dB/Hz	
Total Jitter	TJ			1.0	ns	2
Electrical						
Data Input Current – Low	I_{IL}	-350			μA	
Data Input Current – High	I_{IH}			350	μA	
Differential Input Voltage	V_{IH} - V_{IL}	0.5		2.4	V	Peak-to-Peak
TX Disable Input Voltage – Low	$T_{DIS,\ L}$	0		0.5	V	3
TX Disable Input Voltage – High	$T_{DIS,\ H}$	2.0		Vcc	V	3
TX Disable Assert Time	T_{ASSERT}			10	μs	
TX Disable Deassert Time	$T_{DEASSERT}$			1	ms	
TX Fault Output Voltage -- Low	T_{FaultL}	0		0.5	V	4
TX Fault Output Voltage -- High	T_{FaultH}	2.0		Vcc+0.3	V	4

Notes: 1. Output power is power coupled into a 9/125 μm single mode fiber.

2. Measured with a 2^{23}-1 PRBS.

3. There is an internal 4.7K to 10K ohm pull-up resistor to VccTX.

4. Open collector compatible, 4.7K to 10K ohm pull-up to Vcc (Host Supply Voltage).

Receiver Specifications (0^oC < Topr < 70^oC, 3.1 V < Vcc < 3. 5V)						
Parameter	**Symbol**	**Min**	**Typ**	**Max**	**Units**	**Notes**
Optical						
Sensitivity	---	---	---	-33	dBm	5
Maximum Input Power	Pin	-8	---	---	dBm	
Signal Detect -- Asserted	Pa	---	---	-33	dBm	Transition: low to high
Signal Detect -- Deasserted	Pd	-43	---	---	dBm	Transition: high to low
Signal detect -- Hysteresis		1.0	---		dB	
Wavelength of Operation		1480		1580	nm	6
Optical Return Loss	ORL	14			dB	
Electrical						
Differential Output Voltage	$V_{OH} - V_{OL}$	0.6		2.0	V	
Output LOS Voltage -- Low	V_{OL}	0		0.5	V	7
Output LOS Voltage – High	V_{OH}	2.0		Vcc+0.3	V	7
Signal Detect Assert Time	AS_{MAX}			100	µs	OFF to ON
Signal Detect Deassert Time	ANS_{MAX}			300	µs	ON to OFF

Notes: 5. Minimum sensitivity and saturation levels at BER 1E-10 for a 2^{23}-1 PRBS.

6. At least 30 dB optical isolation for the wavelength 1260 to 1360 nm.

7. Open collector compatible, 4.7K to 10K ohm pull-up to Vcc (Host Supply Voltage).

RECOMMENDED CIRCUIT SCHEMATIC

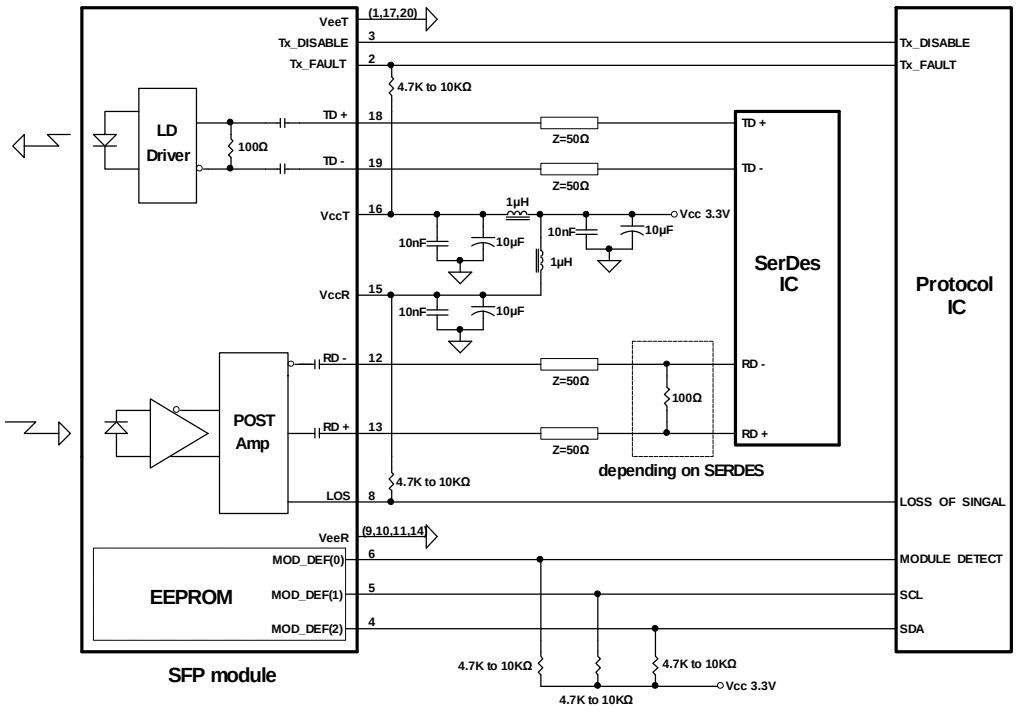

CONNECTION DIAGRAM

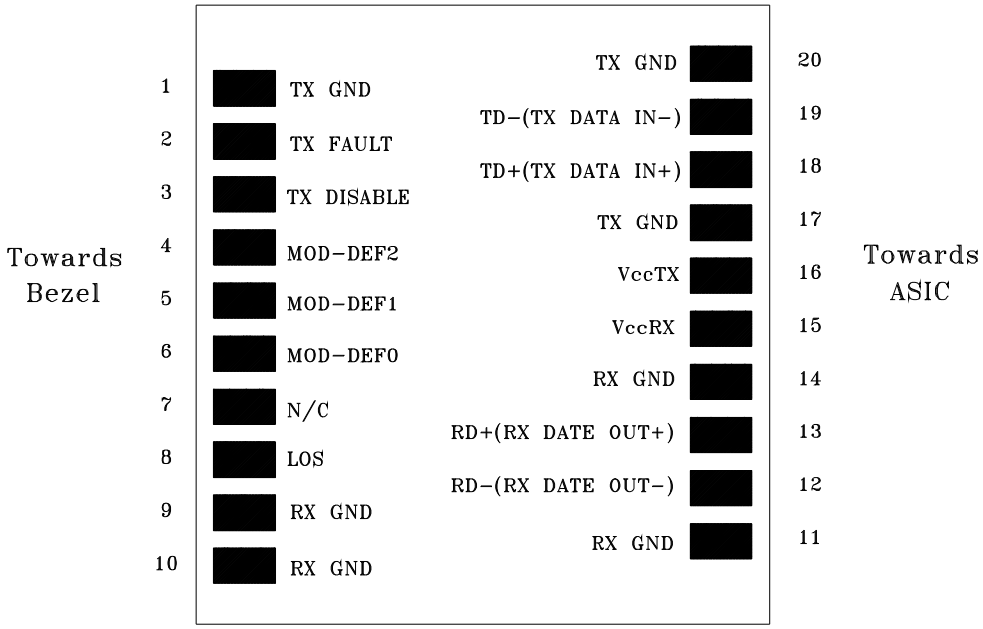

PIN	Signal Name	Description	PIN	Signal Name	Description
1	TX GND	Transmitter Ground	11	RX GND	Receiver Ground
2	TX Fault	Transmitter Fault Indication	12	RX DATA OUT-	Inverse Receiver Data Out
3	TX Disable	Transmitter Disable (Module disables on high or open)	13	RX DATA OUT+	Receiver Data Out
4	MOD-DFE2	Modulation Definition 2 – Two wires serial ID Interface	14	RX GND	Receiver Ground
5	MOD-DEF1	Modulation Definition 1 – Two wires serial ID Interface	15	Vcc RX	Receiver Power – 3.3V±5%
6	MOD-DEF0	Modulation Definition 0 – Ground in Module	16	Vcc TX	Transmitter Power – 3.3V±5%
7	N/C	Not Connected	17	TX GND	Transmitter Ground
8	LOS	Loss of Signal	18	TX DATA IN+	Transmitter Data In
9	RX GND	Receiver Ground	19	TX DATA IN-	Inverse Transmitter Data In
10	RX GND	Receiver Ground	20	TX GND	Transmitter Ground

Module Definition

Module Definition	MOD-DEF2 PIN 4	MOD-DEF1 PIN 5	MOD-DEF0 PIN 6	Interpretation by Host
4	SDA	SCL	LV-TTL Low	Serial module definition protocol

Module Definition 4 specifies a serial definition protocol. For this definition, upon power up, MOD-DEF(1:2) appear as no connector (NC) and MOD-DEF(0) is TTL LOW. When the host system detects this condition, it activates the serial protocol. The protocol uses the 2-wire serial CMOS E^2PROM protocol of the ATMEL AT24C01A/02/04 family of components.

PACKAGE DIAGRAM

Units in mm

A) SC SFP

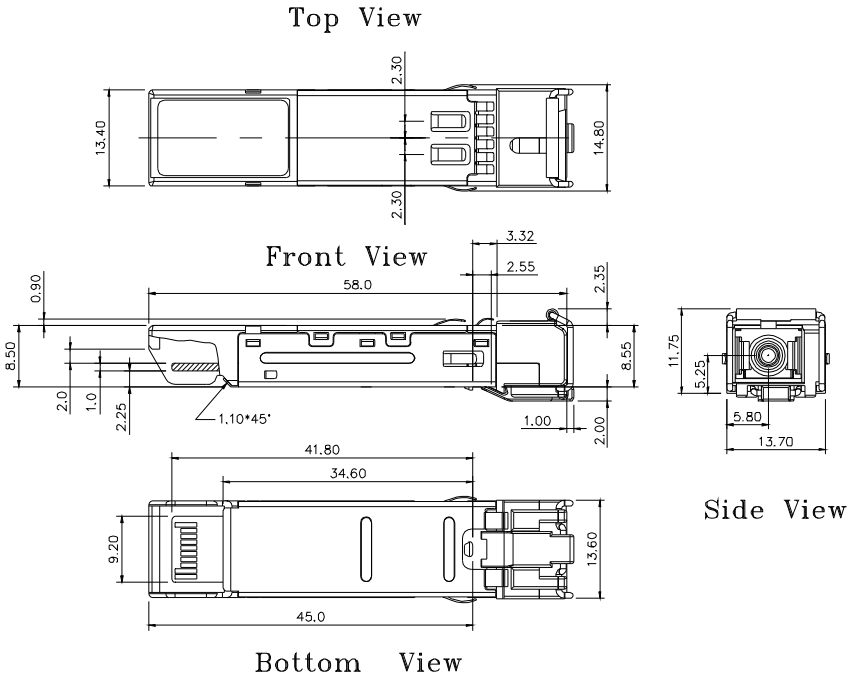

A) LC SFP

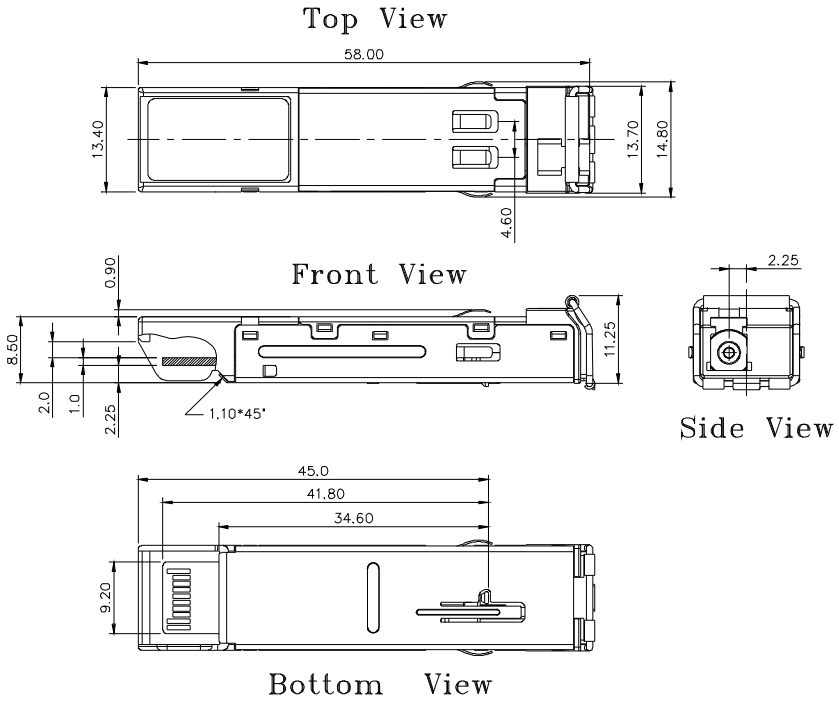

Note: Specifications subject to change without notice.

Revision History

Version	Subject	Release Date
1.0	Initial datasheet	2005/12/1
2.0	Combine datasheet of SC BIDI SFP and LC BIDI SFP	2006/3/1
3.0	Revise SC BIDI SFP package diagram for high port density use	2008/1/1