Low Voltage, Synchronous Step Down PWM Controller

Ideal for 2A to 10A, Small Footprint, DC-DC Power Converters

FEATURES

- Optimized for Single Input Voltage - 3V to 5.5V
- High Efficiency: Greater than 95% possible
- Accurate, 500kHz Fixed Frequency Operation
- Fast Transient Response
- 500µA, I_Q (25µA in Shutdown)
- Internal, 0.4 V/ms, Soft Start Circuit
- Precision 1% Reference
- Resistor Programmable Output Voltage
- Lossless Adjustable Current Limit with
- High Side $R_{DS(ON)}$ Sensing
- 0% to 100% Duty Cycle Range
- High Side PMOS Switch Negates Need for
- External Charge Pump
- Output Over Voltage Protection
- Hiccup Mode Current Limit Protection

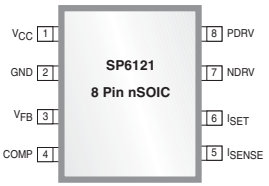

Now Available in Lead Free Packaging

APPLICATIONS

- Supply Bias for
  - DSP
  - Microprocessor Core
  - I/O & Logic
- Video Cards
- Board Level Supply in Distributed Power Systems

DESCRIPTION

The SP6121 is a fixed frequency, voltage mode, synchronous PWM controller designed to work from a single 5V or 3.3V input supply, providing excellent AC and DC regulation for high efficiency power conversion. The operating frequency is internally set at 500kHz, permitting the use of small, surface mount inductors and capacitors. Requiring only few external components, the SP6121 packaged in an 8-pin SOIC, is especially suited for low voltage applications where cost, small size and high efficiency are critical. With its low voltage capability and inherent 100% duty cycle operation, the SP6121 allows low dropout operation in the event of a low input supply voltage condition.

TYPICAL APPLICATION CIRCUIT

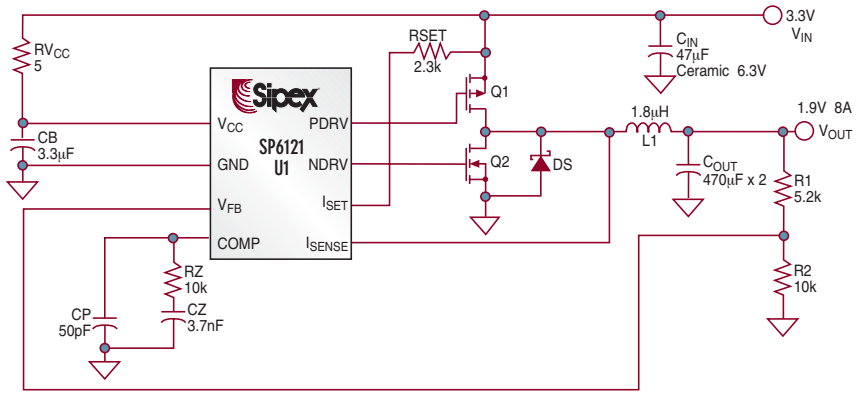

Q1 = FAIRCHILD FDS6375
Q2 = FAIRCHILD FDS6690A
DS = STMICROELECTRONICS STPS2L25BU

L1 = PANASONIC ETQ-P6F1R6SFA
C_{OUT} = SANYO 4TPB470M

 © Copyright 2004 Sipex Corporation

ABSOLUTE MAXIMUM RATINGS

V_{CC} 7V
All other pins ..... -0.3V to V_{CC}+0.3V
Peak Output Current < 10μs
PDRV, NDRV 2A
Storage Temperature ..... -65°C to 150°C
Lead Temperature (Soldering, 10 sec) ..... 300°C
ESD Rating ..... 2kV HBM

These are stress ratings only and functional operation of the device at these ratings or any other above those indicated in the operation sections of the specifications below is not implied. Exposure to absolute maximum rating conditions for extended periods of time may affect reliability.

ELECTRICAL CHARACTERISTICS

Unless otherwise specified: 0°C < T_A < 70°C, 3.0V < V_{CC} < 5.5V, C_{COMP} = 22nF, C_{PDRV} = C_{NDRV} = 3.3nF, V_{FB} = 1.25V, I_{SET} = I_{SENSE} = V_{CC}, GND=0V

PARAMETER	MIN	TYP	MAX	UNITS	CONDITIONS
QUIESCENT CURRENT					
V_{CC} Supply Current	-	0.5	1.0	mA	No Switching
V_{CC} Supply Current (Disabled)	-	25	60	μA	COMP = 0V
ERROR AMPLIFIER					
Error Amplifier Transconductance		600		μs	
COMP Sink Current	15	35	65	μA	V_{FB} = 1.35V, COMP=0.8V, No Faults
COMP Source Current	15	35	65	μA	V_{FB} =1.15V, COMP=1.8V
COMP Output Impedance		3		MΩ	
V_{FB} Input Bias Current		100		nA	
ERROR AMPLIFIER REFERENCE					
Initial Accuracy	1.238	1.250	1.262	V	Trimmed with Error Amp in Unity Gain
Error Amplifier Reference over Line, Load and Temperature	1.225	1.250	1.275	V	
OSCILLATOR & DELAY PATH					
Internal Oscillator Frequency	440	500	560	kHz	
Maximum Duty Cycle	100	-	-	%	COMP = 2V
Minimum Duty Cycle	-	-	0	%	COMP = 0.8V
Minimum PDRV Pulse Width		100		ns	V_{CC} > 4.5V, Ramp up COMP voltage until PDRV starts switching
CURRENT LIMIT					
Internal Current Limit Threshold	125	160	195	mV	V_{ISET} - V_{ISENSE}, T_A = 25°C
ISET Sink Current	25	30	35	μA	V_{ISET} =5V, T_A = 25°C
Current Limit Threshold and ISET Temperature Coefficient		0.33		%/C	
Current Limit Time Constant		15		μs	
ISENSE Input Bias Current	-	-	100	nA	
SOFT START, SHUTDOWN, UVLO					
Internal Soft Start Slew Rate		0.4		V/ms	Measured at COMP pin on the transition from shutdown
Internal Soft Start Delay Time		1.5		ms	COMP charging to PDRV switching
COMP Discharge Current	150	300		μA	COMP = 0.5V, Fault Initiated
COMP Clamp Voltage	0.6	0.7	0.8	V	V_{FB} = 1.3V
COMP Clamp Current		100		μA	COMP = 0.5V, V_{FB} =1.15V

 © Copyright 2004 Sipex Corporation

ELECTRICAL CHARACTERISTICS

Unless otherwise specified: 0°C < T_A < 70°C, 3.0V < V_{CC} < 5.5V, C_{COMP} = 22nF, C_{PDRV} = C_{NDRV} = 3.3nF, V_{FB} = 1.25V, I_{SET} = I_{SENSE} = V_{CC}, GND=0V

PARAMETER	MIN	TYP	MAX	UNITS	CONDITIONS
SOFT START, SHUTDOWN, UVLO: continued					
Shutdown Threshold Voltage	0.2	0.3	0.4	V	Measured at COMP Pin
Shutdown Input Pull-up Current		5		µA	COMP = 0.2V, Measured at COMP pin
V_{CC} Start Threshold	2.69	2.79	2.89	V	
V_{CC} Stop Threshold	2.59	2.69	2.79	V	
V_{CC} Hysteresis	-	100	-	mV	
GATE DRIVERS					
PDRV Rise Time	-	40	110	ns	V_{CC} > 4.5V
PDRV Fall Time	-	40	110	ns	V_{CC} > 4.5V
NDRV Rise Time	-	40	110	ns	V_{CC} > 4.5V
PDRV Fall Time	-	40	110	ns	V_{CC} > 4.5V
PDRV to NDRV Non-Overlap Time		80		ns	V_{CC} > 4.5V
NDRV to PDRV Non-Overlap Time		50		ns	V_{CC} > 4.5V

PIN DESCRIPTION

PIN NO.	PIN NAME	DESCRIPTION
1	V_{CC}	Positive input supply for the control circuitry and gate drivers. Properly bypass this pin to GND with a low ESL/ESR ceramic capacitor.
2	GND	Ground pin. Both power and control circuitry of the IC is referenced to this pin.
3	V_{FB}	Feedback Voltage Pin. It is the inverting input of the Error Amplifier and serves as the output voltage feedback point for the buck converter. The output voltage is sensed and can be adjusted through an external resistor divider.
4	COMP	Output of the Error Amplifier. It is internally connected to the non-inverting input of the PWM comparator. A lead-lag network is typically connected to the COMP pin to compensate the feedback loop in order to optimize the dynamic performance of the voltage mode control loop. Sleep mode can be invoked by pulling the COMP pin below 0.2V with an external open-drain or open-collector transistor. Supply current is reduced to 25µA (typical) in shutdown. An internal 5µA pull-up ensures start-up.
5	I_{SENSE}	Current Limit Sense pin. Connect this pin to the switching node at the junction between the two external power MOSFET transistors. This pin monitors the voltage dropped across the $R_{DS(ON)}$ of the high side P-channel MOSFET while it is conducting. When this drop exceeds the sum of the voltage programmed through the I_{SET} pin plus the internal 160mV threshold, the overcurrent comparator sets the fault latch and terminates the output pulses. The controller stops switching and goes through a hiccup sequence. This prevents excessive power dissipation in the external power MOSFETs during an overload condition. An internal delay circuit prevents that very short and mild overload conditions, that could occur during a load transient, activate the current limit circuit.
6	I_{SET}	Current Limit Threshold pin. An external resistor connected between this pin and the source of the high side P-channel MOSFET adds to the internal current limit threshold of 160mV. If a current limit threshold in excess of 160mV is required, the external programming resistor can properly be chosen based on the internal 30µA pull down current available on the I_{SET} pin. Both this 30µA current source and the 160mV built-in current limit threshold have a positive temperature coefficient to provide first order correction for the temperature coefficient of the external P-channel MOSFET's $R_{DS(ON)}$.
7	NDRV	High current driver output for the low side MOSFET switch. It is always low if PDRV is low or during a fault.
8	PDRV	High current driver output for the high side MOSFET switch. It is always high if NDRV is high or during a fault.

© Copyright 2004 Sipex Corporation

FUNCTIONAL DIAGRAM

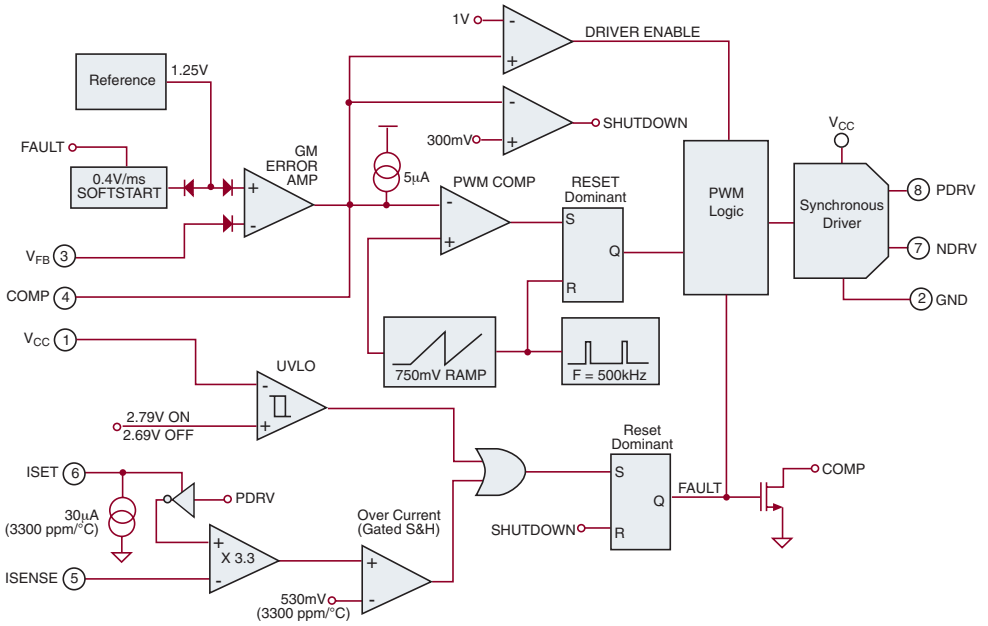

THEORY OF OPERATION

General Overview

The SP6121 is a constant frequency, voltage mode, synchronous PWM controller designed for low voltage, DC/DC step down converters. It is intended to provide complete control for a high power, high efficiency, precisely regulated output voltage from a highly integrated 8-pin solution.

The internal free-running oscillator accurately sets the PWM frequency at 500kHz without requiring any external elements and allows the use of physically small, low value external components without compromising performance. A transconductance amplifier is used for the error amplifier, which compares an attenuated sample of the output voltage with a precision reference voltage. The output of the error amplifier (COMP), is compared to a 0.75V peak-to-peak ramp waveform to provide PWM control. The COMP pin provides access to the output of the error amplifier and allows the use of external components to stabilize the voltage loop.

High efficiency is obtained through the use of synchronous rectification. Synchronous regulators replace the catch diode in the standard buck converter with a low $R_{DS(ON)}$ N-channel MOSFET switch allowing for significant efficiency improvements. The SP6121 includes two fast MOSFET drivers with internal non-overlap circuitry and drives a complementary pair of power transistors, P-channel on the high side, and N-channel on the low side. The use of a P-channel high side device minimizes complexity and external component count by eliminating the need for a charge pump that would otherwise be required to fully enhance an N-channel device. It also allows inherent 100% duty cycle for low dropout operation in the event of a low input supply voltage condition.

The SP6121 includes an internal 0.4V/ms soft-start circuit that provides controlled ramp up of the output voltage, preventing overshoot and inrush current at power up.

Current limiting is implemented by monitoring the voltage drop across the $R_{DS(ON)}$ of the high side P-channel MOSFET while it is conducting, thereby eliminating the need for an external sense resistor. The over-current comparator has a built-in threshold of 160mV that can be programmed to higher values using a single external resistor, connected to the I_{SET} pin, whose

 © Copyright 2004 Sipex Corporation

value is selected to match the MOSFET characteristics. When the over-current threshold is exceeded, the over-current comparator sets the fault latch and terminates the output pulses. The controller stops switching and goes through a hiccup sequence. This prevents excessive power dissipation in the external power MOSFETs during an overload condition. An internal delay circuit prevents that very short and mild overload conditions, that could occur during a load transient, activate the current limit circuit.

A low power sleep mode can be invoked in the SP6121 by externally forcing the COMP pin below 0.3V. Quiescent supply current in sleep mode is typically less than 25µA. An internal 5µA pull-up current at the COMP pin brings the SP6121 out of shutdown mode.

The SP6121 also includes under-voltage lockout and over-voltage protection. Output overvoltage protection is achieved by turning off the high side switch, and turning on the low side N-channel MOSFET full time.

Enable

Low quiescent mode or "Sleep Mode" is initiated by pulling the COMP pin below 0.3V with an external open-drain or open-collector transistor. Supply current is reduced to 25µA (typical) in shutdown. On power-up, assuming that V_{CC} has exceeded the UVLO start threshold (2.79V), an internal 5µA pull-up current at the COMP pin brings the SP6121 out of shutdown mode and ensures start-up. During normal operating conditions and in absence of a fault, an internal clamp prevents the COMP pin from swinging below 0.6V. This guarantees that during mild transient conditions, due either to line or load variations, the SP6121 does not enter shutdown unless it is externally activated.

During Sleep Mode, the high side and low side MOSFETs are turned off and the internal soft start voltage is held low.

UVLO

Assuming that there is not shutdown condition present, then the voltage on the V_{CC} pin determines operation of the SP6121. As V_{CC} rises, the UVLO block monitors V_{CC} and keeps the high side and low side MOSFETS off and the internal SS voltage low until V_{CC} reaches 2.79V. If no faults are present, the SP6121 will initiate a soft start when V_{CC} exceeds 2.79V.

Hysteresis (about 100mV) in the UVLO comparator provides noise immunity at start-up.

Soft Start

Soft start is required on step-down controllers to prevent excess inrush current through the power train during start-up. Typically this is managed by sourcing a controlled current into a timing capacitor and then using the voltage across this capacitor to slowly ramp up either the error amp reference or the error amp output (COMP). The control loop creates narrow width driver pulses while the output voltage is low and allows these pulses to increase to their steady-state duty cycle as the output voltage increases to its regulated value. As a result of controlling the inductor volt*second product during startup, inrush current is also controlled.

In the SP6121 the duration of the soft-start is controlled by an internal timing circuit that provides a 0.4V/ms slew-rate, which is used during start-up and over-current to set the hiccup time. The SP6121 implements soft-start by ramping up the error amplifier reference voltage providing a controlled slew-rate of the output voltage, thereby preventing overshoot and inrush current at power up.

The presence of the output capacitor creates extra current draw during startup. Simply stated, dV_{OUT}/dt requires an average sustained current in the output capacitor and this current must be considered while calculating peak inrush current and over current thresholds. An approximate expression to determine the excess inrush current due to the dV_{OUT}/dt of the output capacitor C_{OUT} is:

$$IC_{OUT} = C_{OUT}*(0.4\ V/ms) * \frac{V_{OUT}}{1.25}$$

As Figure 1 shows, the SS voltage controls a variety of signals. First, provided all the external fault conditions are removed, an internal 5µA pull-up at the COMP pin brings the SP6121 out of shutdown mode. The internal timing circuit is then activated and controls the ramp-up of the error amp reference voltage. The COMP pin is pulled to 0.7V by the internal

 © Copyright 2004 Sipex Corporation

clamp and then gradually charges preventing the error amplifier from forcing the loop to maximum duty cycle. As the COMP voltage crosses about 1V (valley voltage of the PWM ramp), the driver begins to switch the high side MOSFET with narrow pulses in an effort to keep the converter output regulated . The SP6121 operates at low duty cycle as the COMP voltage increases above 1V. As the error amp reference ramps upward, the driver pulses widen until a steady state value is reached and the output voltage is regulated to the final value ending the soft start charge cycle.

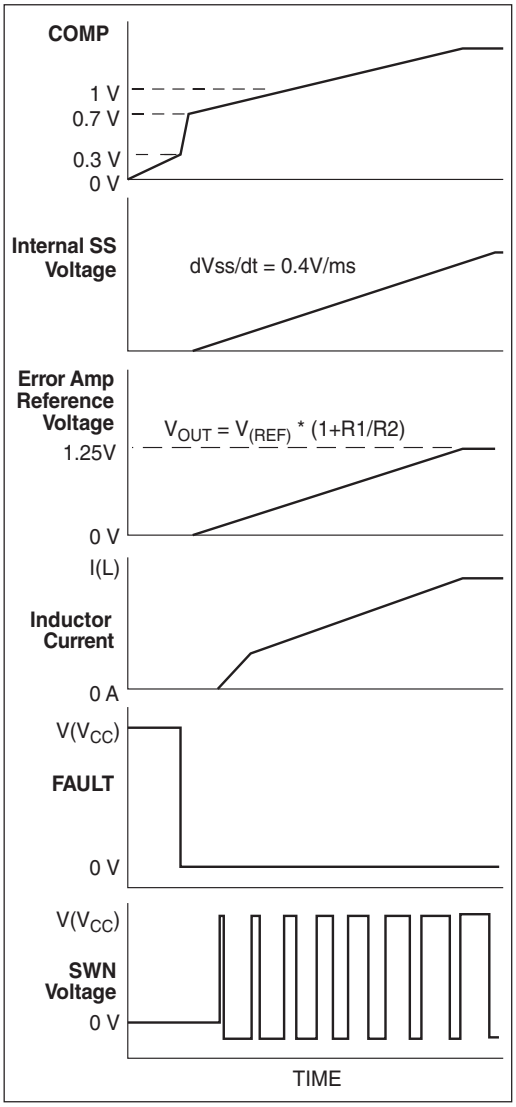

Figure 1. SP6121 Soft Start Waveforms

Hiccup Mode

When the converter enters a fault mode, the SP6121 holds the high side and low side MOSFETs off for a finite period of time. Provided that the SP6121 is enabled, this time is set by the internal charge of the SS capacitor. In the event of an over-current condition, the current sense comparator sets the fault latch, which in turn discharge the internal SS capacitor, the COMP pin and holds the output drivers off. During this condition, the SP6121 stays off for the time it takes to discharge the COMP pin down below the 0.3V shutdown threshold. As soon as the COMP pin reaches 0.3V, the fault latch is reset and the SP6121 is allowed to attempt restart just like during a normal soft start cycle. The COMP pin has to charge back to 1V before any output switching can take place. At this point, the regulator attempts to restart normally by delivering short gate pulses to the output switches. If the over-current condition persists, the regulator will be kept off for the total time that it takes to charge the internal soft-start capacitor to within 1V from the input supply voltage V_{CC} plus the time required by the COMP voltage to cross the 1V threshold. This total time is typically several milli-seconds and minimizes thermal stress to the regulator components as the over-current condition persists.

The waveforms that describe the hiccup mode operation are shown in Figure 2.

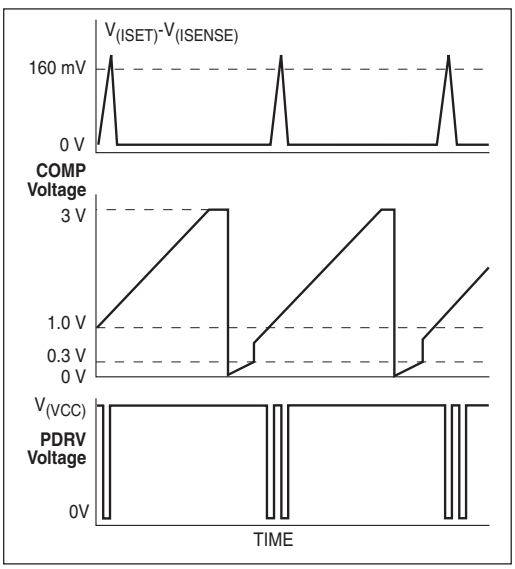

Figure 2. SP6121 Hiccup mode waveforms

 © Copyright 2004 Sipex Corporation

Over Current Protection

Over current protection on the SP6121 is implemented through detection of an excess voltage condition across the high side PMOS switch during conduction. This is typically referred to as high side $R_{DS(ON)}$ detection and eliminates the need of an external sense resistor. The over current comparator charges an internal sampling capacitor each time $V_{(ISET)}$ - $V_{(ISENSE)}$ exceeds the 160mV (typ) internal threshold and the PDRV voltage is low. The discharge/charge current ratio on the sampling capacitor is about 2%. Therefore, provided that the over current condition persists, the capacitor voltage will be pumped up during each time PDRV switches low. This voltage will trigger an over current condition upon reaching a CMOS inverter threshold. There are many advantages to this approach. First, the filtering action of the gated S/H scheme protects against false and undesirable triggering that could occur during a minor transient overload condition or supply line noise. Furthermore, the total amount of time to trigger the fault depends on the on-time of the PMOS switch. Ten, 1µs pulses are equivalent to twenty, 500ns pulses or one, 10µs pulse, however, depending on the period, each scenario takes a different amount of total time to trigger a fault. Therefore, the fault becomes an indicator of average power in the PMOS switch.

Although the 160 mV internal threshold is fixed, the overall $R_{DS(ON)}$ detection voltage can be increased by placing a resistor from I_{SET} to the source of the PMOS. A 30µA sink current programs the additional voltage.

In order for the current limit circuit to operate properly and accurately, the I_{SET} and I_{SENSE} pins must be Kelvin connected to the high side PMOS's source and drain pins.

The 160mV threshold and 30µA I_{SET} current have 3300 ppm/°C temperature coefficients in an effort to first order match the thermal characteristics of the $R_{DS(ON)}$ of the PMOS switch. It assumed that the SP6121 will be used in compact designs where there is a high amount of thermal coupling between the PMOS and the controller.

Output Drivers

The SP6121, unlike some other bipolar controller IC's, incorporates gate drivers with rail-to-rail swing that help prevent spurious turn on due to capacitive coupling. The driver stage consists of one high side PMOS, 4Ω driver, PDRV, and one low side, 4Ω, NFET driver, NDRV, optimized for driving external power MOSFET's in a synchronous buck topology. The output drivers also provide gate drive non-overlap mechanism that provides a dead time between PDRV and NDRV transitions to avoid potential shoot-through problems in the external MOSFET's.

Figure 3 shows typical waveforms for the output drivers. As with all synchronous designs, care must be taken to ensure that the MOSFETs are properly chosen for non-overlap time, enhancement gate drive voltage, "on" resistance $R_{DS(ON)}$, reverse transfer capacitance Crss, input voltage and maximum output current.

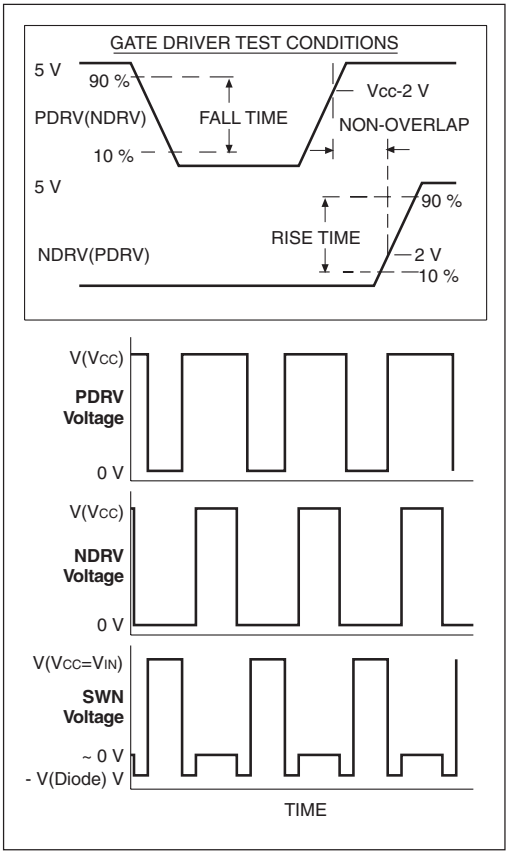

Figure 3. SP6121 Output Driver Waveforms.

 © Copyright 2004 Sipex Corporation

Inductor Selection

There are many factors to consider in selecting the inductor including cost, efficiency, size and EMI. In a typical SP6121 circuit, the inductor is chosen primarily for value, saturation current and DC resistance. Increasing the inductor value will decrease output voltage ripple, but degrade transient response. Low inductor values provide the smallest size, but cause large ripple currents, poor efficiency and more output capacitance to smooth out the larger ripple current. The inductor must also be able to handle the peak current at the switching frequency without saturating, and the copper resistance in the winding should be kept as low as possible to minimize resistive power loss. A good compromise between size, loss and cost is to set the inductor ripple current to be within 20% to 40% of the maximum output current.

The switching frequency and the inductor operating point determine the inductor value as follows:

$$L = \frac{V_{OUT}(V_{IN(\max)} - V_{OUT})}{V_{IN(\max)}\ F_S\ K_r\ I_{OUT(\max)}}$$

where;

F_S = switching frequency

K_r = ratio of the peak to peak inductor ripple current to the maximum output current

The peak to peak inductor ripple current is:

$$I_{PP} = \frac{V_{OUT}(V_{IN(\max)} - V_{OUT})}{V_{IN(\max)}\ F_S\ L}$$

Once the required inductor value is selected, the proper selection of core material is based on peak inductor current and efficiency requirements. The core material must be large enough not to saturate at the peak inductor current

$$I_{PEAK} = I_{OUT(\max)} + \frac{I_{PP}}{2}$$

and provide low core loss at the high switching frequency. Low cost powdered iron cores have a gradual saturation characteristic but can introduce considerable ac core loss, especially when the inductor value is relatively low and the ripple current is high. Ferrite materials, on the other hand, are more expensive and have an abrupt saturation characteristic with the inductance dropping sharply when the peak design current is exceeded. Nevertheless, they are preferred at high switching frequencies because they present very low core loss and the design only needs to prevent saturation.

The power dissipated in the inductor is equal to the sum of the core and copper losses. To minimize copper losses, the winding resistance needs to be minimized, but this usually comes at the expense of a larger inductor. Core losses have a more significant contribution at low output current where the copper losses are at a minimum, and can typically be neglected at higher output currents where the copper losses dominate. Core loss information is usually available from the magnetic vendor.

The copper loss in the inductor can be calculated using the following equation:

$$P_{L(Cu)} = I^2_{L(RMS)}\ R_{WINDING}$$

where $I_{L(RMS)}$ is the RMS inductor current that can be calculated as follows:

$$I_{L(RMS)} = I_{OUT(max)}\ \sqrt{1 + \frac{1}{3}\left(\frac{I_{PP}}{I_{OUT(max)}}\right)^2}$$

Output Capacitor Selection

The required ESR (Equivalent Series Resistance) and capacitance drive the selection of the type and quantity of the output capacitors. The ESR must be small enough that both the resistive voltage deviation due to a step change in the load current and the output ripple voltage do not exceed the tolerance limits expected on the output voltage. During an output load transient, the output capacitor must supply all the additional current demanded by the load until the SP6121 adjusts the inductor current to the new value. Therefore the capacitance must be large enough so that the output voltage is held up

 © Copyright 2004 Sipex Corporation

while the inductor current ramps up or down to the value corresponding to the new load current. Additionally, the ESR in the output capacitor causes a step in the output voltage equal to the ESR value multiplied by the change in load current. Because of the fast transient response provided by the SP6121 when exposed to output load transient, the output capacitor is typically chosen for ESR , not for capacitance value.

The output capacitor's ESR, combined with the inductor ripple current, is typically the main contributor to output voltage ripple. The maximum allowable ESR required to maintain a specified output voltage ripple can be calculated by:

$$R_{ESR} \leq \frac{\Delta V_{OUT}}{I_{PP}}$$

where;

ΔV_{OUT} = peak to peak output voltage ripple

I_{PP} = peak to peak inductor ripple current

The total output ripple is a combination of the ESR and the output capacitance value and can be calculated as follows:

$$\Delta V_{OUT} = \sqrt{\left(\frac{I_{PP}\,(1-D)}{C_{OUT}F_S}\right)^2 + (I_{PP}R_{ESR})^2}$$

where;

D = duty cycle equal to V_{OUT}/V_{IN}

C_{OUT} = output capacitance value

Recommended capacitors that can be used effectively in SP6121 applications are: low-ESR aluminum electrolytic capacitors, OS-CON capacitors that provide a very high performance/ size ratio for electrolytic capacitors and low-ESR tantalum capacitors. AVX TPS series and Kemet T510 surface mount capacitors are popular tantalum capacitors that work well in SP6121 applications. POSCAP from Sanyo is a solid electrolytic chip capacitor that has low ESR and high capacitance. For the same ESR value, POSCAP has lower profile compared with tantalum capacitor.

Panasonic offers the SP series of specialty polymer aluminum electrolytic surface mount capacitors. These capacitors have a lower ESR than tantalum capacitors, reducing the total number of capacitance required for a given transient response.

Input Capacitor Selection

The input capacitor should be selected for ripple current rating, capacitance and voltage rating. The input capacitor must meet the ripple current requirement imposed by the switching current. In continuous conduction mode, the source current of the high-side MOSFET is approximately a square wave of duty cycle V_{OUT}/ V_{IN}. Most of this current is supplied by the input bypass capacitors. The RMS value of input capacitor current is determined at the maximum output current and under the assumption that the peak to peak inductor ripple current is low, it is given by:

$$I_{CIN(rms)} = I_{OUT(max)} \sqrt{D(1 - D)}$$

The worse case occurs when the duty cycle D is 50% and gives an RMS current value equal to IOUT/2. Select input capacitors with adequate ripple current rating to ensure reliable operation.

The power dissipated in the input capacitor is:

$$P_{CIN} = I^2_{CIN(rms)}\ R_{ESR(CIN)}$$

This can become a significant part of power losses in a converter and reduce the overall energy transfer efficiency.

The input voltage ripple primarily depends on the input capacitor ESR and capacitance. Ignoring the inductor ripple current, the input voltage ripple can be determined by:

$$\Delta V_{IN} = I_{OUT(MAX)}R_{ESR(CIN)} + \frac{I_{OUT(MAX)}V_{OUT}(V_{IN} - V_{OUT})}{F_S C_{IN} V_{IN}^2}$$

The capacitor type suitable for the output capacitors can also be used for the input capacitors. However, exercise extra caution when tantalum capacitors are considered. Tantalum capacitors are known for catastrophic failure when exposed to surge current, and input capacitors are prone to such surge current when power

 © Copyright 2004 Sipex Corporation

supplies are connected 'live' to low impedance power sources. Certain tantalum capacitors, such as AVX TPS series, are surge tested. For generic tantalum capacitors, use 2:1 voltage derating to protect the input capacitors from surge fall-out.

MOSFET Selection

The SP6121 drives a PMOS MOSFET on the high side and an NMOS MOSFET synchronous rectifier on the low side. Using a PMOS switch on the high side negates the need for an external charge pump and simplifies the application circuit.

The losses associated with MOSFETs can be divided into conduction and switching losses. Conduction losses are related to the on resistance of MOSFETs, and increase with the load current. Switching losses occur on each on/off transition when the MOSFETs experience both high current and voltage. Since the bottom MOSFET switches current from/to a paralleled diode (either its own body diode or a Schottky diode), the voltage across the MOSFET is no more than 1V during switching transition. As a result, its switching losses are negligible. The switching losses are difficult to quantify due to all the variables affecting turn on/off time. However, making the assumption that the turn on and turn off transition times are equal, the transition time can be approximated by:

$$t_T = \frac{C_{ISS} V_{IN}}{I_G},$$

where;

C_{ISS} is the PMOS's input capacitance, or the sum of the gate-to-source capacitance, C_{GS}, and the drain-to-gate capacitance, C_{GD}. This parameter can be directly obtained from the MOSFET's data sheet I_G is the gate drive current provided by the SP6121 (approximately 1A at V_{IN}=5V) and V_{IN} is the input supply voltage.

Therefore an approximate expression for the switching losses associated with the high side MOSFET can be given as:

$$P_{SH(max)} = (V_{IN(max)} + V_F) I_{OUT(max)} t_T F_S,$$

where;

t_T = the switching transition time

V_F = free wheeling diode drop

Switching losses need to be taken into account for high switching frequency, since they are directly proportional to switching frequency. The conduction losses associated with top and bottom MOSFETs are determined by

$$P_{CH(max)} = R_{DS(ON)} I_{OUT(max)}^2 D$$

$$P_{CL(max)} = R_{DS(ON)} I_{OUT(max)}^2 (1 - D),$$

where;

$P_{CH(max)}$ = conduction losses of the high side MOSFET

$P_{CL(max)}$ = conduction losses of the low side MOSFET

$R_{DS(ON)}$ = drain to source on resistance.

The total power losses of the top MOSFET are the sum of switching and conduction losses. For synchronous buck converters of efficiency over 90%, allow no more than 4% power losses for high or low side MOSFETs. For input voltages of 3.3V and 5V, conduction losses often dominate switching losses. Therefore, lowering the $R_{DS(ON)}$ of the MOSFETs always improves efficiency even though it gives rise to higher switching losses due to increased C_{ISS} .

Total gate charge is the charge required to turn the MOSFETs on and off under the specified operating conditions (V_{GS} and V_{DS}). The gate charge is provided by the SP6121 gate drive circuitry. (At 500kHz switching frequency, the gate charge is the dominant source of power dissipation in the SP6121.) At low output levels, this power dissipation is noticeable as a reduction in efficiency. The average current required to drive the high side and low side MOSFETs is:

$$I_{G(av)} = Q_{GH} F_S + Q_{GL} F_S,$$

where;

Q_{GH} = gate charge of PMOS

Q_{GL} = gate charge of NMOS

Considering that the gate charge current comes from the input supply voltage VIN, the power dissipated in the SP6121 due to the gate drive is:

$$P_{GATE\ DRIVE} = V_{IN} I_{G(av)}$$

$R_{DS(ON)}$ varies greatly with the gate driver voltage. The MOSFET vendors often specify $R_{DS(ON)}$ on multiple gate to source voltages (V_{GS}), as

 © Copyright 2004 Sipex Corporation

well as provide typical curve of $R_{DS(ON)}$ versus V_{GS}. For 5V input, use the $R_{DS(ON)}$ specified at 4.5V V_{GS}. At the time of this publication, vendors, such as Fairchild, Siliconix and International Rectifier, have started to specify $R_{DS(ON)}$ at V_{GS} less than 3V. This has provided necessary data for designs in which these MOSFETs are driven with 3.3V and made it possible to use SP6121 in 3.3V only applications.

Thermal calculation must be conducted to ensure the MOSFET can handle the maximum load current. The junction temperature of the MOSFET, determined as follows, must stay below the maximum rating.

$$T_{J(\max)} = T_{A(\max)} + \frac{P_{MOSFET(\max)}}{R_{\theta JA}},$$

where;

$T_{A(max)}$ = maximum ambient temperature

$P_{MOSFET(max)}$ = maximum power dissipation of the MOSFET

$R_{\theta JA}$ = junction to ambient thermal resistance.

$R_{\theta JA}$ of the device depends greatly on the board layout, as well as device package. Significant thermal improvement can be achieved in the maximum power dissipation through the proper design of copper mounting pads on the circuit board. For example, in a SO-8 package, placing two 0.04 square inches copper pad directly under the package, without occupying additional board space, can increase the maximum power from approximately 1 to 1.2W. For DPAK package, enlarging the tap mounting pad to 1 square inches reduces the $R_{\theta JA}$ from 96°C/W to 40°C/W.

Schottky Diode Selection

When paralleled with the bottom MOSFET, an optional Schottky diode can improve efficiency and reduce noise. Without this Schottky diode, the body diode of the bottom MOSFET conducts the current during the non-overlap time when both MOSFETs are turned off. Unfortunately, the body diode has high forward voltage and reverse recovery problem. The reverse recovery of the body diode causes additional switching noises when the diode turns off. The Schottky diode alleviates this noise and additionally improves efficiency thanks to its low forward voltage. The reverse voltage across the diode is equal to input voltage, and the diode must be able to handle the peak current equal to the maximum load current.

The power dissipation of the Schottky diode is determined by

$$P_{DIODE} = 2V_F I_{OUT} T_{NOL} F_S$$

where;

T_{NOL} = non-overlap time between PDRV and NDRV.

V_F = forward voltage of the Schottky diode.

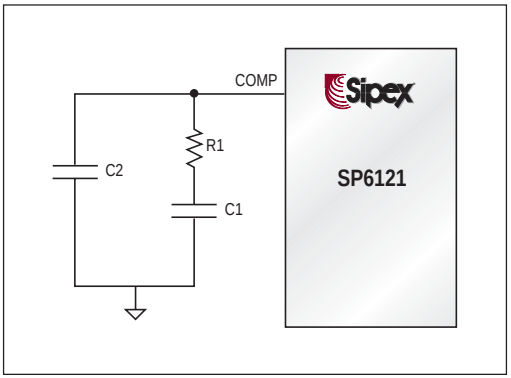

Figure 4. The RC network connected to the COMP pin provides a pole and a zero to control loop.

Loop Compensation Design

The goal of loop compensation is to manipulate loop frequency response such that its gain crosses over 0db at a slope of -20db/dec. The SP6121 has a trans-conductance error amplifier and requires the compensation network to be connected between the COMP pin and ground, as shown in Figure 4.

The first step of compensation design is to pick the loop crossover frequency. High crossover frequency is desirable for fast transient response, but often jeopardize the system stability. Crossover frequency should be higher than the ESR zero but less than 1/5 of the switching frequency. The ESR zero is contributed by the ESR

 © Copyright 2004 Sipex Corporation

associated with the output capacitors and can be determined by

$$f_{Z(ESR)} = \frac{1}{2\pi C_{OUT} R_{ESR}}$$

Crossover frequency of 20kHz is a sound first try if low ESR tantalum capacitors or poscaps are used at the output. The next step is to calculate the complex conjugate poles contributed by the LC output filter,

$$f_{P(LC)} = \frac{1}{2\pi\sqrt{LC_{OUT}}}$$

The open loop gain of the whole system can be divided into the gain of the error amplifier, PWM modulator, buck converter, and feedback resistor divider. In order to crossover at the selected frequency fco, the gain of the error amplifier has to compensate for the attenuation caused by the rest of the loop at this frequency. In the RC network shown in Figure 4, the product of R1 and the error amplifier transconductance determines this gain. Therefore, R1 can be determined from the following equation that takes into account the typical error amplifier transconductance, reference voltage and PWM ramp built into the SP6121.

$$R1 = \frac{975 V_{OUT} f_{CO} f_{Z(ESR)}}{V_{IN} f_{P(LC)}^2}$$

In Figure 4, R1 and C1 provides a zero f_{Z1} which needs to be placed at or below $f_{P(LC)}$. If f_{Z1} is made equal to $f_{P(LC)}$ for convenience, the value of C1 can be calculated as

$$C1 = \frac{1}{2\pi f_{P(LC)} R_1}$$

The optional C2 generates a pole f_{P1} with R1 to cut down high frequency noise for reliable operation. This pole should be placed one decade higher than the crossover frequency to avoid erosion of phase margin. Therefore, the value of the C2 can be derived from

$$C2 = \frac{1}{20\pi f_{CO} R_1}$$

Figure 5 illustrates the overall loop frequency response and frequency of each pole and zero.

To fine-tune the compensation, it is necessary to physically measure the frequency response using a network analyzer.

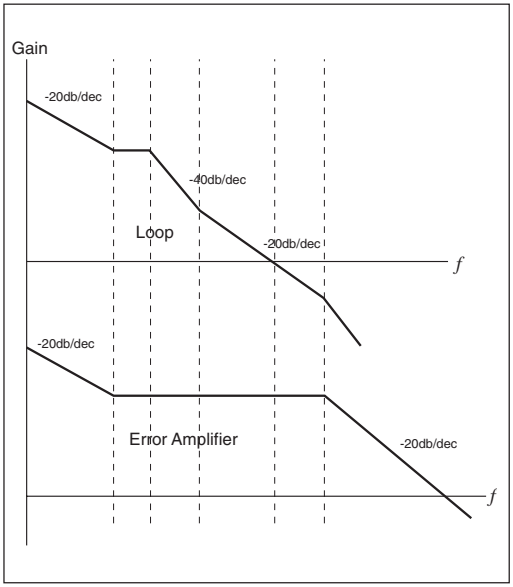

Figure 5. Frequency response of a stable system and its error amplifier.

Overcurrent Protection

Over current protection on the SP6121 is implemented through detection of an excess voltage condition across the high side PMOS switch during conduction. This is typically referred to as high side $R_{DS(ON)}$ detection. By using the $R_{DS(ON)}$ of Q1 to measure the output current, the current limit circuit eliminates the sense resistor that would otherwise be required and the corresponding loss associated with it. This improves the overall efficiency and reduces the number of components in the power path benefiting size and cost. $R_{DS(ON)}$ sensing is by default inaccurate and is primarily meant to protect the power supply during a fault condition. The overcurrent trip point will vary from unit to unit as the $R_{DS(ON)}$ of Q1 varies. The SP6121 provides a built-in 160mV threshold between the I_{SET} and I_{SENSE} pins. If a current limit threshold in excess of 160mV is required, an external programming resistor, R_{SET} can be added between I_{SET} pin and V_{IN} as shown in Figure 6.

 © Copyright 2004 Sipex Corporation

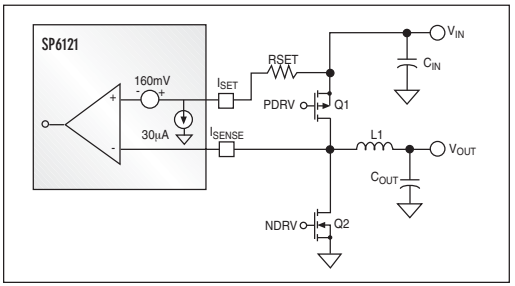

Figure 6. Current Limit Setting

The value of R_{SET} can be properly chosen based on the desired current limit point I_{MAX} and the internal 30µA pull down current available on the I_{SET} pin according to the following expression:

$$R_{SET} = \frac{I_{MAX}R_{DS(ON)} - 160mV}{I_{SET}}$$

where,

I_{SET} = 30µA (typ) sink current from the I_{SET} pin.

Kelvin-Sense connections should be made directly at the drain and source of Q1.

The $R_{DS(ON)}$ sensing scheme implemented in the SP6121 provides two additional features that enhance the performance of the overcurrent function. First, an internal sample and hold filter connected after the main current-sense comparator, prevents that noise spikes or very short and mild overload conditions, that could occur during a load transient, spuriously activate the current limit circuitry. This typically eliminates the need of using any external filtering that would be otherwise required. Additionally, since the $R_{DS(ON)}$ has a positive temperature coefficient, both the 30µA sink current present at the I_{SET} pin and the 160mV built-in current limit threshold have been designed with a positive temperature coefficient of about 0.33%/C to provide first order correction for current limit versus temperature. This compensation relies on the high amount of thermal coupling that typically exists between the high side switch Q1 and the SP6121 due to the compact size of the power supply. With this first order compensation, the current limit trip point does not need to be set to an increased level at room temperature to guarantee a desired output current level at higher temperatures.

Output Voltage Program

As shown in Figure 7(A), the voltage divider connecting to the V_{FB} pin programs the output voltage according to

$$V_{OUT} = 1.25\left(1 + \frac{R1}{R2}\right)$$

where 1.25V is the internal reference voltage.

Select R2 in the range of 10k to 100k, and R1 can be calculated using

$$R1 = \frac{R2(V_{OUT} - 1.25)}{1.25}$$

For output voltage less than 1.25V, a simple circuit shown in Figure 7(B) can be used in which V_{REF} is an external voltage reference greater than 1.25V. For simplicity, use the same resistor value for R1 and R2, then R3 is determined as follows,

$$R3 = \frac{(V_{REF} - 1.25)R1}{2.5V - V_{OUT}}$$

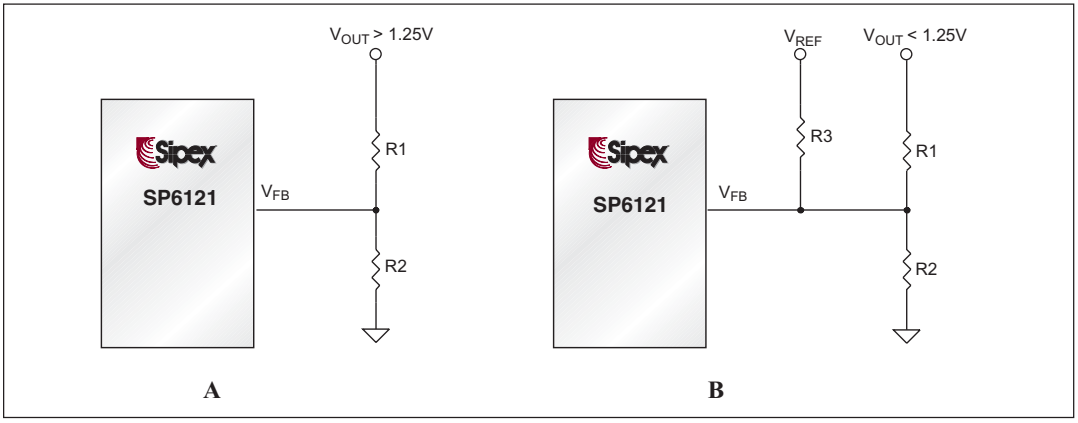

Figure 7(A) A voltage divider connected to the V_{FB} pin programs the output voltage. (B) A simple circuit using one external voltage reference programs the output voltages less than 1.25V.

 © Copyright 2004 Sipex Corporation

PCB layout plays a critical role in proper function of the converters and EMI control. In switch mode power supplies, loops carrying high di/dt give rise to EMI and ground bounces. The goal of layout optimization is to identify these loops and minimize them. It is also crucial on how to connect the controller ground such that its operation is not affected by noise. The following guideline should be followed to ensure proper operation.

1. A ground plane is recommended for minimizing noises, copper losses and maximizing heat dissipation.

2. Begin the layout by placing the power components first. Orient the power circuitry to achieve a clean power flow path. If possible make all the connections on one side of the PCB with wide, copper filled areas.

3. Connect the ground of feedback divider and compensation components directly to the GND pin of the IC using a dedicated ground trace. Then connect this pin as close as possible to the ground of the output capacitor.

4. The V_{CC} bypass capacitor should be right next to the V_{CC} and GND pins.

5. The trace connecting the feedback resistors to the output should be short, direct and far away from the switch node, and switching components.

6. Minimize the trace between PDRV/NDRV and the gates of the MOSFETs to reduce the impedance driving the MOSFETs. This is especially important for the bottom MOSFET that tends to turn on through its Miller capacitor when the switch node swings high.

7. Minimize the loop composed of input capacitors, top/bottom MOSFETs and Schottky diode. This loop carries high di/dt current. Also increase the trace width to reduce copper losses.

8. Maximize the trace width of the loop connecting the inductor, output capacitors, Schottky diode and bottom MOSFET.

9. I_{SET} and I_{SENSE} connections to Q1 for current limiting must be make using Kelvin connections.

 © Copyright 2004 Sipex Corporation

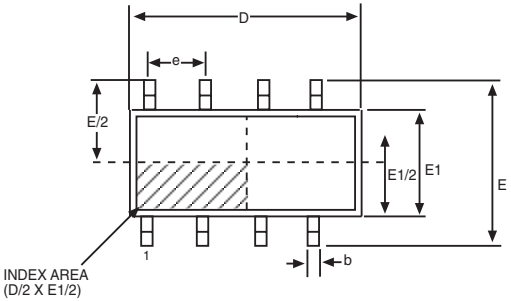

TOP VIEW

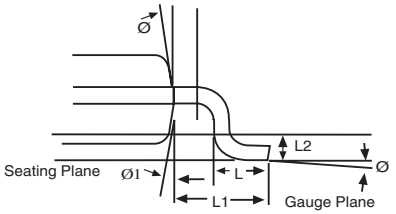

VIEW C

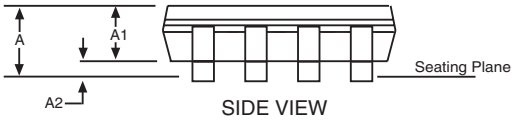

SIDE VIEW

8 Pin NSOIC JEDEC MO-012 (AA) Variation			
SYMBOL	MIN	NOM	MAX
A	1.35	-	1.75
A1	0.1	-	0.25
A2	1.25	-	1.65
b	0.31	-	0.51
c	0.17	-	0.24
D		4.90 BSC	
E		6.00 BSC	
E1		3.90 BSC	
e		1.27 BSC	
L	0.4	-	1.27
L1		1.04 REF	
L2		0.25 BSC	
ø	0º	-	8º
ø1	5º	-	15º

Note: Dimensions in (mm)

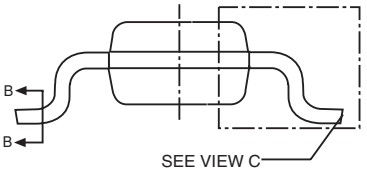

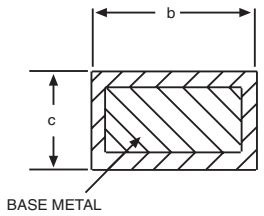

SECTION B-B
WITH PLATING

 © Copyright 2004 Sipex Corporation

ORDERING INFORMATION

Part Number	Operating Temperature Range	Package Type
SP6121CN	0˚C to +70˚C	8-Pin nSOIC
SP6121CN/TR	0˚C to +70˚C	8-Pin nSOIC

Available in lead free packaging. To order add "-L" suffix to part number.

Example: SP6121CN/TR = standard; SP6121CN-L/TR = lead free

/TR = Tape and Reel

Pack quantity is 2,500 for NSOIC.

ANALOG EXCELLENCE

Sipex Corporation

Headquarters and
Sales Office
233 South Hillview Drive
Milpitas, CA 95035
TEL: (408) 934-7500
FAX: (408) 935-7600

Sipex Corporation reserves the right to make changes to any products described herein. Sipex does not assume any liability arising out of the application or use of any product or circuit described herein; neither does it convey any license under its patent rights nor the rights of others.

Appendix and Web Link Information

For further assistance:

Email:	Sipexsupport@sipex.com
WWW Support page:	http://www.sipex.com/content.aspx?p=support
Sipex Application Notes:	http://www.sipex.com/applicationNotes.aspx
Product Change Notices:	http://www.sipex.com/content.aspx?p=pcn

Sipex Corporation
Headquarters and
Sales Office
233 South Hillview Drive
Milpitas, CA95035
tel: (408) 934-7500
faX: (408) 935-7600

Sipex Corporation reserves the right to make changes to any products described herein. Sipex does not assume any liability arising out of the application or use of any product or circuit described herein; neither does it convey any license under its patent rights nor the rights of others.

The following sections contain information which is more changeable in nature and is therefore generated as appendices.

1) **Package Outline Drawings**
2) **Ordering Information**

If Available:

3) **Frequently Asked Questions**
4) **Evaluation Board Manuals**
5) **Reliability Reports**
6) **Product Characterization Reports**
7) **Application Notes for this product**
8) **Design Solutions for this product**

 © 2007 Sipex Corporation

Product Lines

Power Management
- Boost Regulators
- Buck Regulators
- Charge Pumps
- LED Drivers
- Linear Regulators
- Power Blox™
- PWM Controllers
- References
- Supervisors
- USB Vbus Switches

Interface
- Multiprotocol
- RS232
- RS422
- RS485
- USB

Optical Storage
- Advanced Power Control
- Photo Detector IC

SP6121 product details

You are here : Home : Products : PWM Con

Low Voltage, 8 Pin, Synchronous Buck Controller

Quick Links
- Download Datasheet
- SP6121 TRR
- Check Price Availability

Design-In Supp
- Email: Tech
- PWM Contro Product Sele
- Applications
- Evaluation B
- Quality Infor
- Part Nomen
- Design Solut

Features

- Optimized for Single Input Voltage - 3V to 5.5V
- High Efficiency: Greater than 95% possible
- Accurate, 500kHz Fixed Frequency Operation
- Fast Transient Response
- 500µA, IQ (25µA in Shutdown)
- Internal, 0.4 V/ms, Soft Start Circuit
- Precision 1% Reference
- Resistor Programmable Output Voltage
- Lossless Adjustable Current Limit with
- High Side RDS(ON) Sensing
- 0% to 100% Duty Cycle Range
- High Side PMOS Switch Negates Need for
- External Charge Pump
- Output Over Voltage Protection
- Hiccup Mode Current Limit Protection

Fixed Switching Frequency

Ordering Part Number

Part Number	Package Code	RoHS	MIN. Temp. (°C)	MAX. Temp. (°C)	Status	Buy	Samples
PWM CONTROLLER SP**6121**							
SP**6121**CN-L	NSOIC8	▪	0	70	Active	Buy Now	Order Sa
SP**6121**CN-L/TR	NSOIC8	▪	0	70	Active	Buy Now	Order Sa
SP**6121**CN	NSOIC8		0	70	Active	Buy Now	Order Sa
SP**6121**CN/TR	NSOIC8		0	70	Active	Buy Now	Order Sa
SP**6121**EB	Board		0	70	Active	Buy Now	Order Sa
SP**6121**CN-RETEST			0	70	EOL		
SP**6121**EN-L					OBS		
SP**6121**EN					OBS		

Part Status Legend

Active - the part is released for sale, standard product.

EOL (End of Life) - the part is no longer being manufactured, there may or may not be inventory still in stock.

CF (Contact Factory) - the part is still active but customers should check with the factory for availability. Longer lead-times may apply.

PRE (Pre-introduction) - the part has not been introduced or the part number is an early version available for sample only.

OBS (Obsolete) - the part is no longer being manufactured and may not be ordered.

NRND (Not Recommended for New Designs) - the part is not recommended for new designs.

All rights reserved, Sipex 2007

REVISION HISTORY			
REV.	DISCRIPTION	DATE	APP'D
A	DRAWING ORIGINATION	08/16/05	JL
B	DRAWING FORMAT MODIFICATION	07/19/06	JL

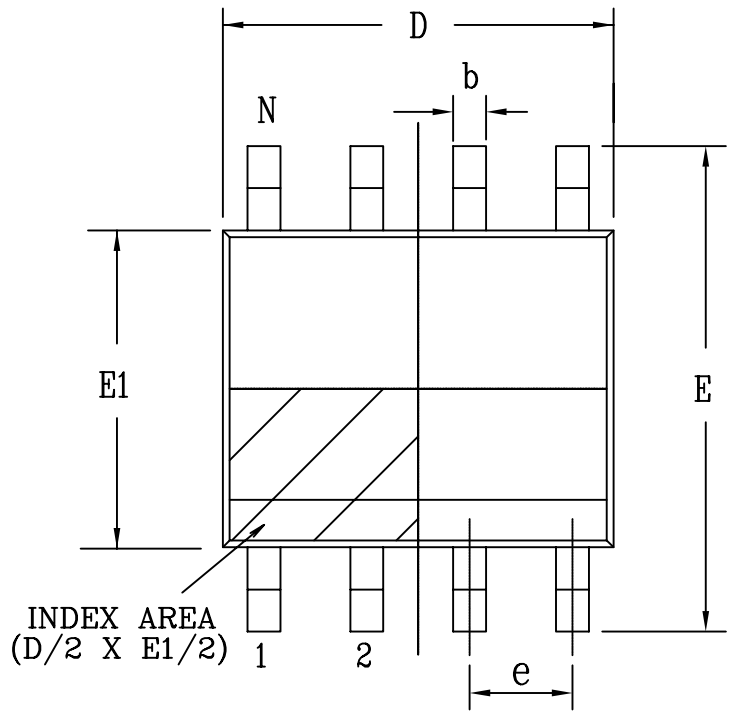

Top View

8 Pin SOICN JEDEC MS-012 Variation AA						
SYMBOLS	DIMENSIONS IN MM (Control Unit)			DIMENSIONS IN INCH (Reference Unit)		
	MIN	NOM	MAX	MIN	NOM	MAX
A	1.35	—	1.75	0.053	—	0.069
A1	0.10	—	0.25	0.004	—	0.010
A2	1.25	—	1.65	0.049	—	0.065
b	0.31	—	0.51	0.012	—	0.020
c	0.17	—	0.25	0.007	—	0.010
E	6.00 BSC			0.236 BSC		
E1	3.90 BSC			0.154 BSC		
e	1.27 BSC			0.050 BSC		
h	0.25	—	0.50	0.010	—	0.020
L	0.40	—	1.27	0.016	—	0.050
L1	1.04 REF			0.041 REF		
L2	0.25 BSC			0.010 BSC		
R	0.07	—	—	0.003	—	—
R1	0.07	—	—	0.003	—	—
θ	0°	—	8°	0°	—	8°
θ1	5°	—	15°	5°	—	15°
θ2	0°	—	—	0°	—	—
D	4.90 BSC			0.193 BSC		
N	8			8		

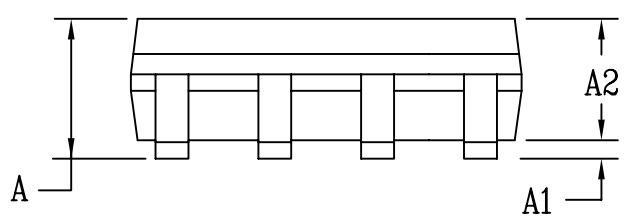

Side View

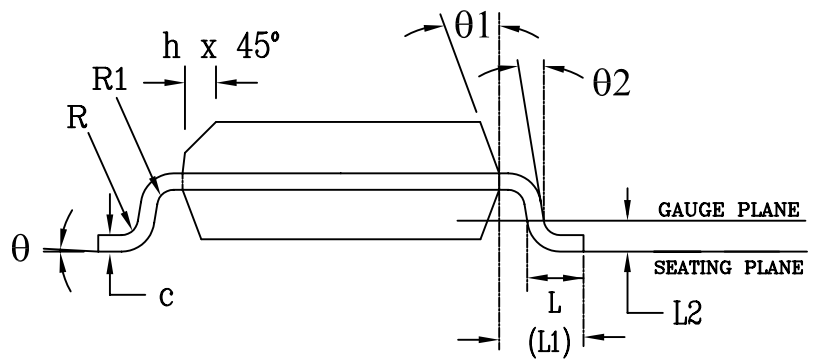

Front View

Solved by Sipex		SIPEX CORPORATION	
		8 PIN SOICN PACKAGE OUTLINE	
Packaging Approval:		Drawing No: 8-PIN SOICN	
By: JL	Date: 07/19/06	Revision: B	Sheet: 1 OF 1

APPLICATION NOTE ANP13

Applying the SP6121 as a SynchronousBuck-Boost 1.5A K2 LUXEON Driver

Introduction

The SP6121 is a 500kHz PWM controller with input voltage range from 3.0V to 5.5V. This is ideal for drawing power out of a one-cell Li Ion battery which varies from 3.4V to 4.3V. The requirement for this application is to provide a maximum 1.5A regulated current into a K2 Lumileds LUXEON® LED.

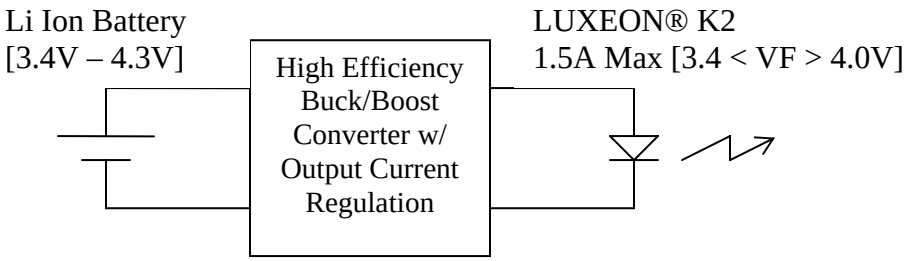

The topology used here is a “non-inverting Cuk boost/buck”. The circuit will also use an external amplifier for converting the current sensing (I_{LED}) into the appropriate voltage level requested by the SP6121 to regulate properly.

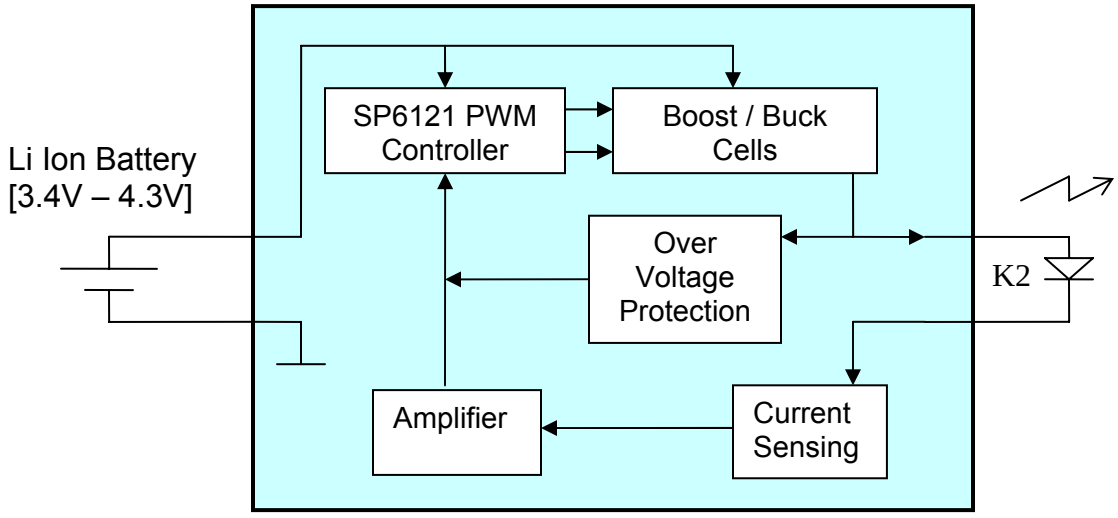

Principle of Operation

The simplified form of a boost buck converter is shown below. The converter can be separated into two cells, a boost cell made out of S1 and L1 and a buck cell around S2 and L2. S1 and S2 are controlled out of phase. Phase 1 is S1 closed

© 2006 Sipex Corporation

and S2 open (On Time). Phase 2 is S1 open and S2 closed (Off Time). The Duty Cycle will be T_{ON}/T_{OFF}. C1 is an energy transfer capacitor and is used to provide a positive voltage on V2 so the buck cell can regulate the appropriate V_{OUT}. During On Time, I1 current is stored into L1 and also provided to L2 through C1. During Off Time, V2 equals GND and any remaining current in L2 still delivers to the load. At the same time, the voltage across C1 is equal to V1 and so becomes negative as current is still flowing across L1. V_{C1} = (V2-V1) and is positive. During the following on-time, this V_{C1} is added on top of V_{IN} and so generates a positive voltage V2 to the buck cell (V2 = Vin + VC1).

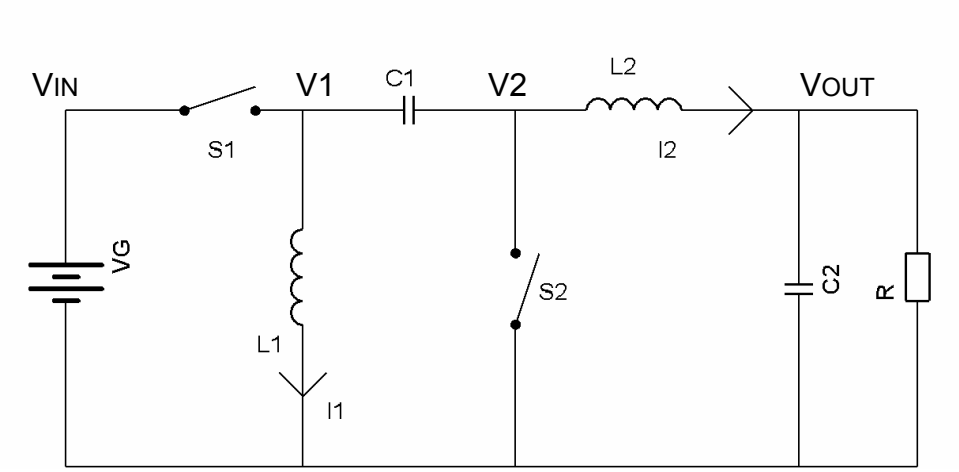

The Duty Cycle of this converter will be :

$V_{OUT} / V_{IN} = D / (1-D)$

Or

$$D = \frac{1}{[(V_{IN}/V_{OUT}) + 1]}$$

So typically, if V_{IN} equals V_{OUT} the Duty Cycle will be 50%.

Design Considerations

Our need here is to power a Luxeon K2 at 1.5A from a one cell Li Ion battery pack. The K2 is an ultra-bright LED that has a VF from 3.6 to 4.3V depending on IF and temperature. The battery will have a voltage from 3.4V to 4.2V. Also depending on charge level, battery output impedance can vary and so induce a loss depending on output current. Due to these conditions, a step up/step down topology is definitely required to get a constant current into the LED regardless of

© 2006 Sipex Corporation

the battery voltage. The converter will automatically adjust its Duty Cycle depending on these factors. The below graph shows the area which will be used.

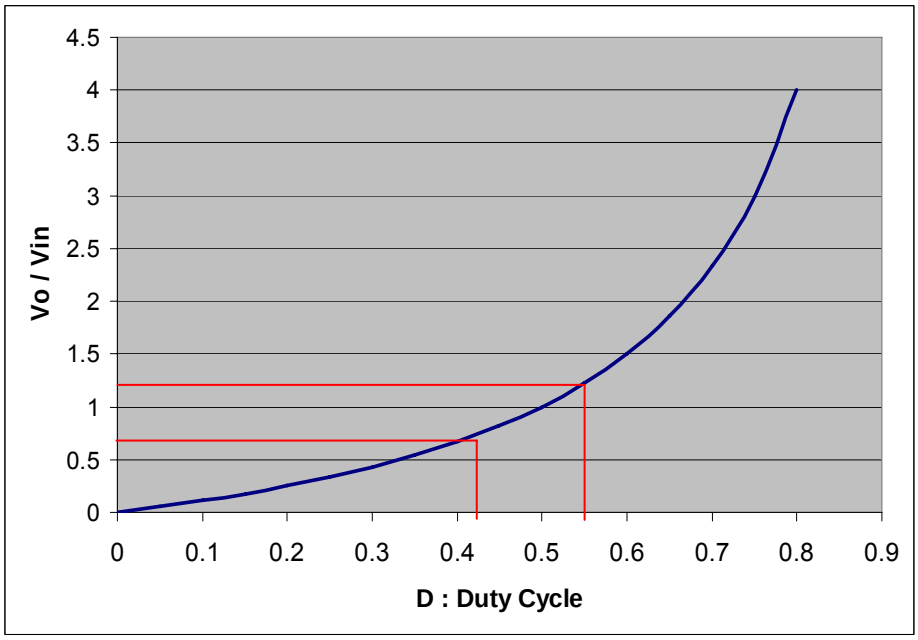

Note that the Duty Cycle will stay around 50%. This value will be used as a reference for calculating the external components.

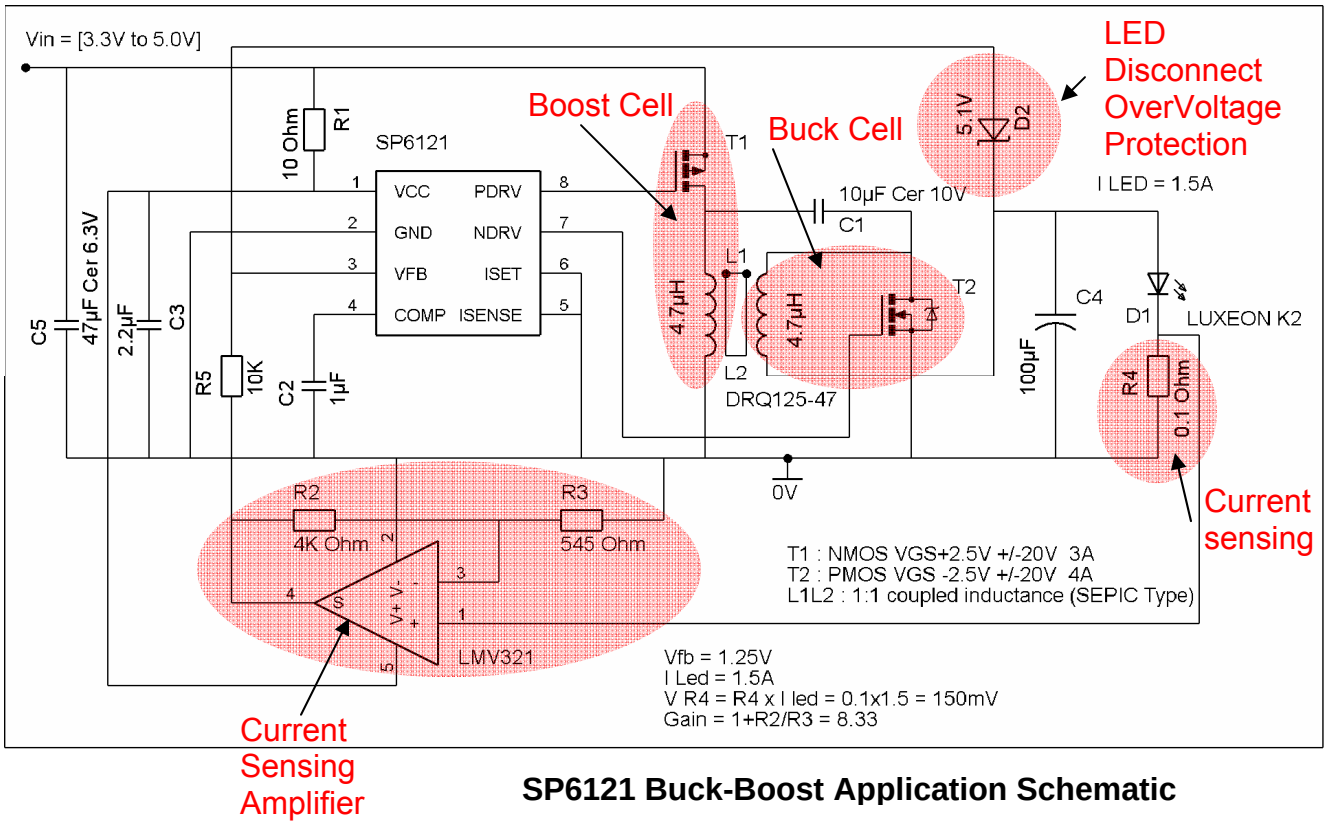

SP6121 Buck-Boost Application Schematic

© 2006 Sipex Corporation

Schematic Description

SP6121	500kHz Synchronous PWM Controller
LMV321	Low Voltage Op Amp for Current Sensing
DRQ125-47	Dual Winding Coil 4.7µH
T1	PMOS Transistor
T2	NMOS Transistor
D2	Zener Diode for OVP

Component Options

The first component to choose is the coil. L1 and L2 will be chosen so they have the same value, in order to be able to use a dual winding coil (two coils on the same core). This kind of coil is usually used in a SEPIC converter and is now a very common product. The advantages to using a spiral winding coil versus two single coils are reduced footprint (the package is typically the same as a single coil) and reduced current ripple due to internal coupling.

If we state that Duty Cycle will be 50% (V_{IN} = V_{OUT}), we can make the assumption that the AC current going through L1 and L2 are the same.
From the buck cell we have:

$$VL2 = L2\frac{di}{dt} = V2 - V_{OUT}$$ (V2 = Secondary Switch Node Voltage)

$$V_{OUT} = V2 - L2 \times I_{OUT} \times Ripple \times F \times D^{-1}$$ (Ripple=Ripple Ratio, F=Freq, D=Duty Cycle)

$$L2 = \frac{V2 - V_{OUT}}{Ripple \times I_{OUT} \times F \times D^{-1}}$$

In this case, as we are powering an LED, we can set the current ripple to be high as it does not matter for the LED lighting performance. Also this will let us reduce the coil value and reduce PCB area. In this topology, V2 (secondary switch node voltage), is always equal to V_{OUT} + V_{IN} regardless of the input and output voltages.

V_{IN} = 3.8V (average voltage of the battery)
V_{OUT} = 3.8V (average voltage of the K2 LED)
V2 = V_{IN} + V_{OUT} = 7.6V
Ripple = 40%
I_{OUT} = 1.5A
F = 500kHz
D = 50%

 © 2006 Sipex Corporation

$$L2 = \frac{7.6 - 3.8}{0.4 \times 1.5 \times 500000 \times 0.5^{-1}}$$ = 6.33µH

As we are using a dual winding coil we choose a 4.7µH inductor. Using a coupled coil allows for this because the AC current is reduced considerably due to internal coupling between the 2 inductors.

Transistor T1 is a P-Channel FET. It is directly controlled by the SP6121 PWM controller. It must be able to saturate its V_{GS} with the minimum input voltage of 3.4V. A typical 2.5V trench MOSFET is well suited for this environment. T2 is the same but is an N Channel FET -- the V_{GS} requirement is the same. Max V_{DS} for both is 20V; ID max is approximately equal to I_{LED} max + 50% = 2.3A. As the Duty Cycle can get higher when the battery is low, the current in the primary cell will increase a bit and then T1 will need to handle more current. Doubling the output current is a good estimate for calibrating the PMOS transistor.

C1 is the energy transfer capacitor. This component does not transfer any DC energy but only AC. So in order to minimize the loss we are choosing a 10µF ceramic capacitor with low ESR.

C_{OUT} is very important as it stores all the energy during T_{OFF}, and so maintains the output voltage. This is a 100µF Tantalum capacitor. A lower value may not be suitable to start the converter at full load with a low voltage battery.

The current regulation is done by sensing the LED current via R4. As it is a 100mΩ resistor, V_{R4} = 0.1 x I_{LED}. The converter is made to regulate 1.5A into the LED. The voltage across R4 will then be 150mV. As the Feedback voltage of the PWM controller is 1.25V, we will need an amplifier made out of an LMV321. This amplifier is a simple non-inverting circuit with gain of 1.25 / 0.15 = 8.33.

In this case Gain is: $1 + \frac{R2}{R3}$

In order to have a safe design, we need to include overvoltage protection to clamp the output voltage in case of a burned LED. This is due to the fact that under a current-regulation architecture, an open circuit load is viewed by the controller as 0 volts V_{OUT}, and so it will infinitely try to increase its value.

The OVP circuit is made out of a simple Zener diode. We choose its voltage so it is more than the maximum VF of the K2 LED and less than the maximum voltage that transistors can support. In our case we took a Zener diode of 5.1V. In order to prevent short-circuiting of the low impedance output of the LMV321, a 10kΩ resistor (R5) is inserted between its output and the FB input of the SP6121.

 © 2006 Sipex Corporation

Circuit Performance

Start up

In order to soft-start the converter, use a 1µF capacitor between the COMP pin and GND. The COMP pin is actually the internal output of the error amplifier. This high capacitance value will act as a local integrator, slowing down any fast variation due to start up or transients.

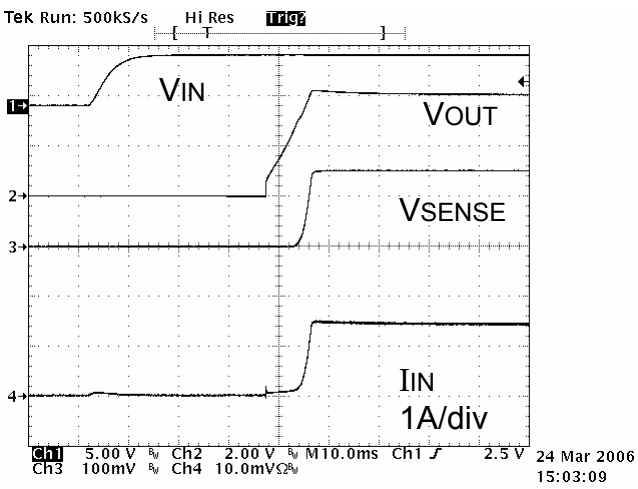

Start up V_{IN}=5.0V

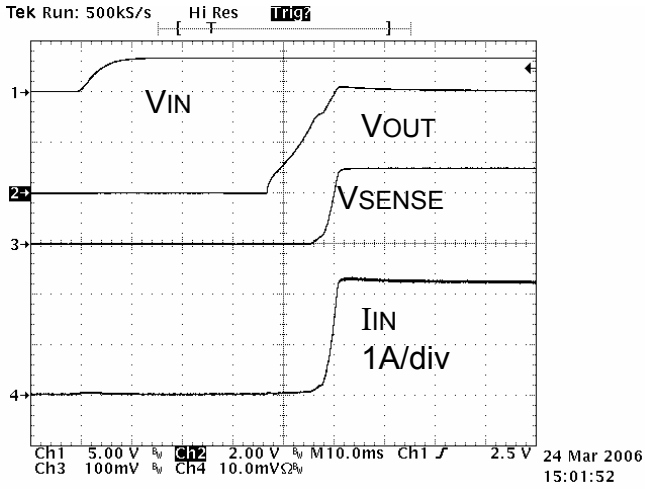

Start up V_{IN}=3.3V

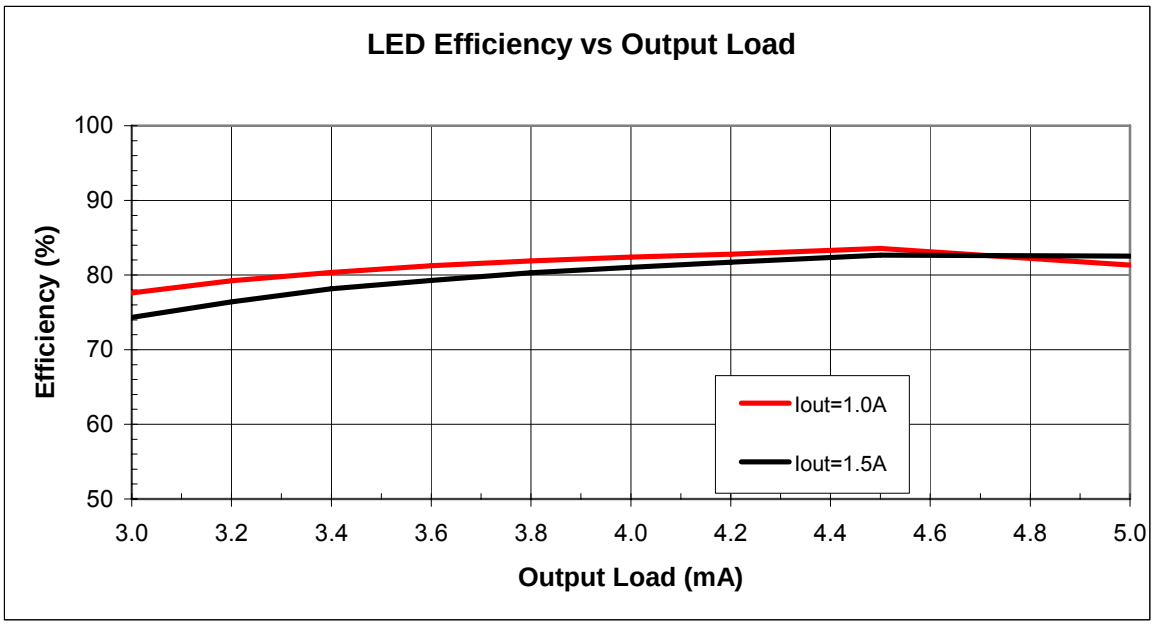

© 2006 Sipex Corporation

Experimental Data

I_{OUT} = 1.0A							
V_{IN}	I_{IN}	V_{OUT}	V_{SENSE}	I_{OUT}	Ripple	Effi	Effi to LED
(V)	(A)	(V)	(mV)	(mA)	(mV)	(%)	(%)
5.0	0.924	3.796	154.8	1032	22	84.8	81.3
4.5	0.999	3.794	154.8	1032	22	87.1	83.5
4.2	1.080	3.793	154.8	1032	22	86.3	82.8
4.0	1.138	3.792	154.7	1031	20	85.9	82.4
3.8	1.204	3.791	154.5	1030	20	85.3	81.9
3.6	1.279	3.79	154.3	1029	20	84.7	81.2
3.4	1.367	3.789	154.1	1027	20	83.8	80.3
3.2	1.471	3.788	153.9	1026	20	82.6	79.2
3.0	1.601	3.788	153.8	1025	20	80.9	77.6

I_{OUT} = 1.5A							
V_{IN}	I_{IN}	V_{OUT}	V_{SENSE}	I_{OUT}	Ripple	Effi	Effi to LED
(V)	(A)	(V)	(mV)	(mA)	(mV)	(%)	(%)
5.0	1.385	3.940	150.8	1508	20	85.8	82.5
4.5	1.530	3.940	150.2	1502	20	86.0	82.7
4.2	1.649	3.930	149.7	1497	23	84.9	81.7
4.0	1.740	3.925	149.4	1494	25	84.3	81.0
3.8	1.845	3.920	149.3	1493	25	83.5	80.3
3.6	1.972	3.918	149.3	1493	25	82.4	79.3
3.4	2.121	3.918	149.6	1496	23	81.3	78.2
3.2	2.310	3.918	149.9	1499	23	79.5	76.4
3.0	2.544	3.919	150.5	1505	22	77.3	74.3

© 2006 Sipex Corporation

Circuit Waveforms

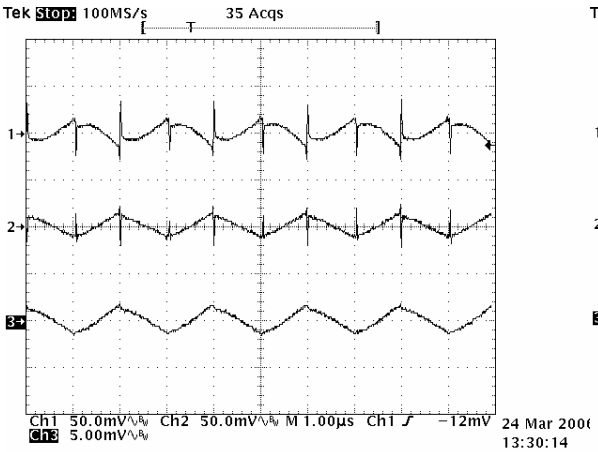

Ripple Noise, V_{IN}=5.0V

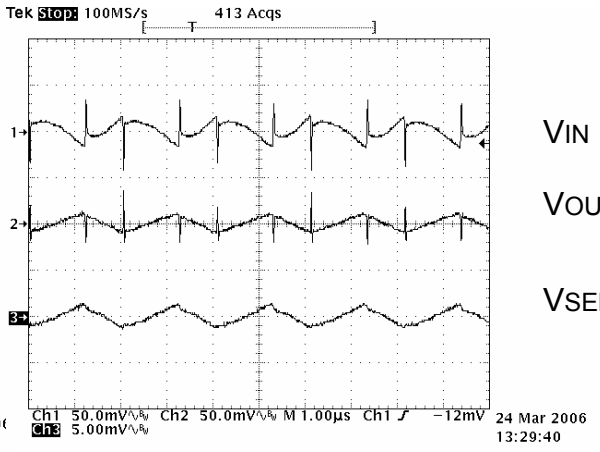

Ripple Noise, V_{IN}=3.3V

V_{IN}

V_{OUT}

V_{SENSE}

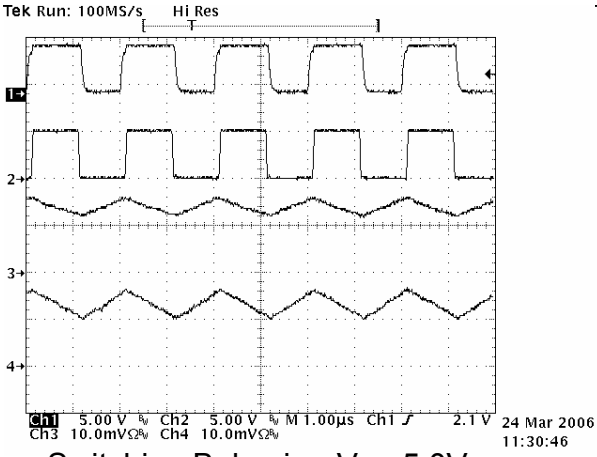

Switching Behavior, V_{IN}=5.0V

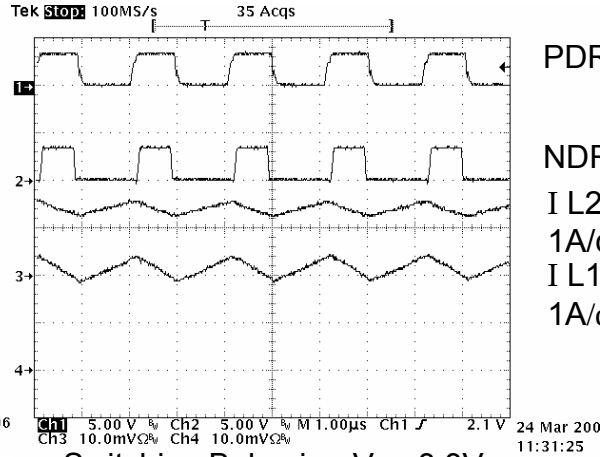

Switching Behavior, V_{IN}=3.3V

PDRV

NDRV

I_{L2} 1A/div

I_{L1} 1A/div

© 2006 Sipex Corporation

Design Solution 20

SP6121 Buck/Boost Circuit for LED Driver up to 1.5A

Date: March 29, 2006

Designed by: Brian Kennedy

Part Number: SP6121CN

Application Description: Provide high output current from 3Vin to 5Vin

Electrical Requirements:

Input Voltage	3.0V – 5.0V
Output Voltage	~3.9V (LED VF + 0.15V Vref)
Output Current	up to 1.5A

Circuit Description:

This circuit has been designed to provide 3Vin to 5Vin boost to White LEDs at approximately 4V output at 1.5Amps. High efficiency and 3-5Volt input dictated the choice of the controller and external components. In order to reduce the reference voltage to a low 150mV and improve efficiency, an additional IC op amp (LMV321) was used to amplify the reference to 1.2V feedback voltage. The SP6121 is the synchronous buck controller that is being used as a buck/boost DC/DC controller. A P-channel MOSFET and N-channel MOSFET are used for higher efficiency in this synchronous SEPIC buck-boost configuration. The high switching frequency (500 kHz) allows the use of small, mutually-coupled 4.7uH inductors.

This report includes the application schematic complete with component part numbers and figures 1-11 illustrating electrical performance of the design.

Copyright ©2006
Sipex Corporation

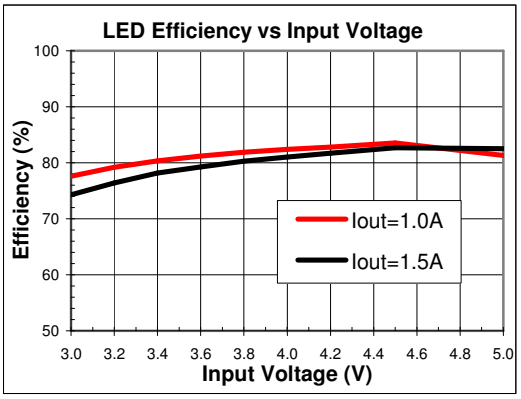

Figure 1. Efficiency Graph

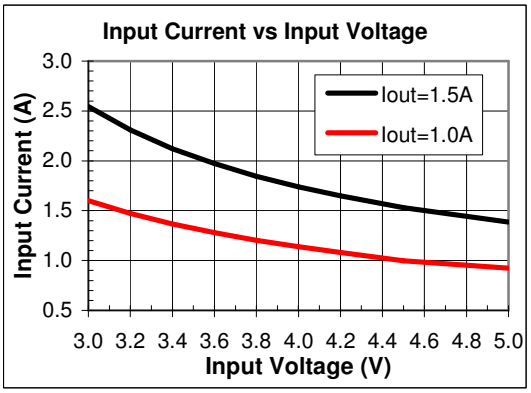

Figure 2. Input Current Graph

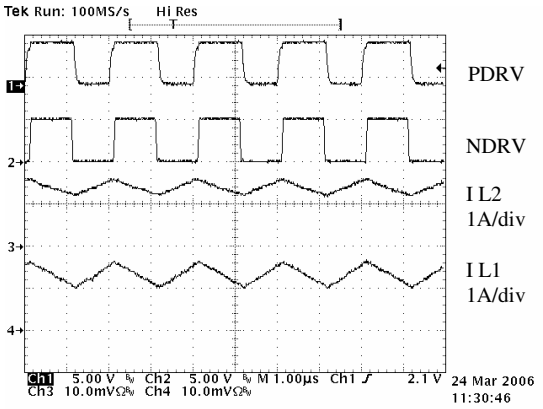

Figure 3. Switching Behaviors
Vin=5V, Iout=1.5A

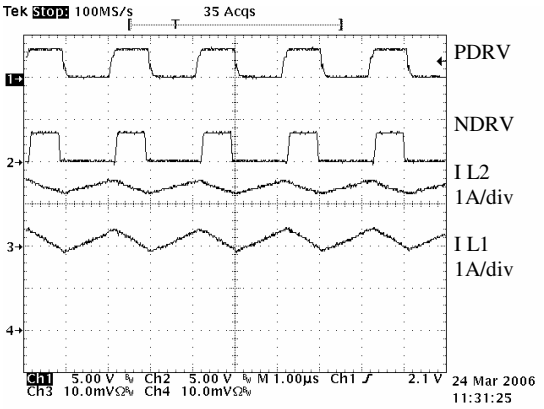

Figure 4. Switching Behaviors
Vin=3.3V, Iout=1.5A

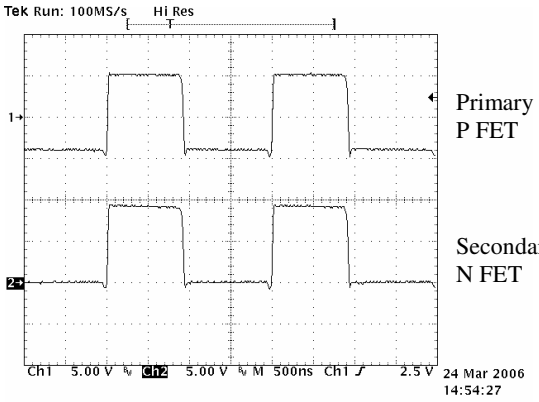

Figure 5. Switch Node
Vin=5.0V, Iout=1.5A

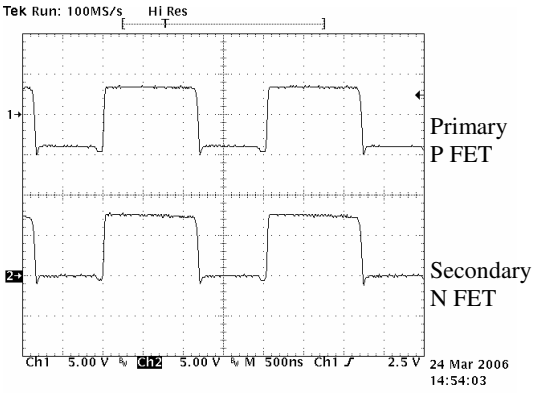

Figure 6. Switch Node
Vin=3.3V, Iout=1.5A

Copyright ©2006
Sipex Corporation

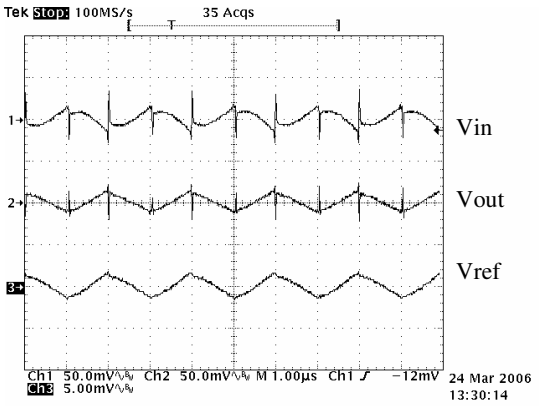

Figure 7. Ripple Noise
Vin=5.0V, Iout=1.5A

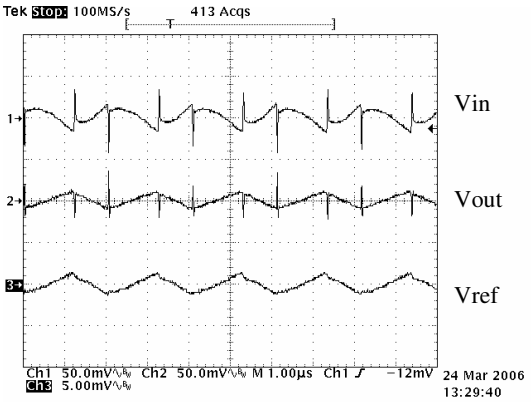

Figure 8. Ripple Noise
Vin=3.3V, Iout=1.5A

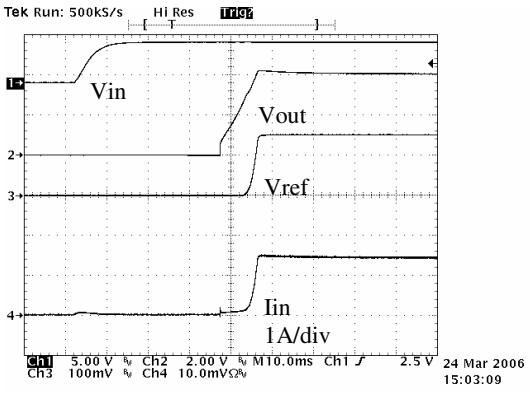

Figure 9. Start up
Vin=5V, Iout=1.5A

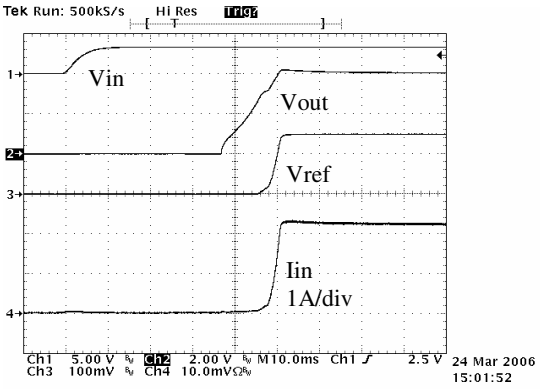

Figure 10. Start up
Vin=3.3V, Iout=1.5A

Copyright ©2006
Sipex Corporation

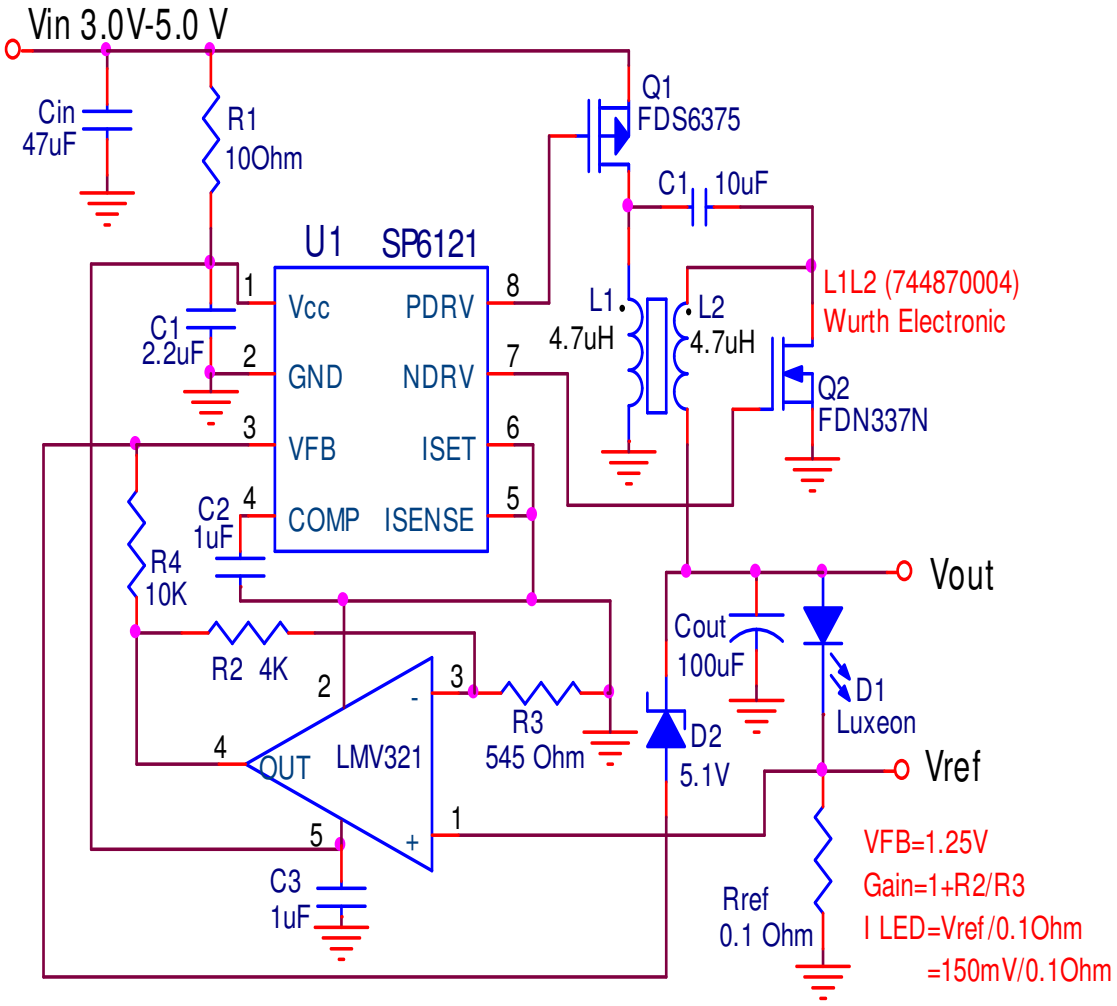

Figure 11. Application Schematic

Copyright ©2006
Sipex Corporation

SP6121
Demo Board Manual

FEATURES

- DC/DC Synchronous Buck Converter for Distributed Power Systems.
- SIP design provides complete, ready to use solutions for :
  Vin=3.0 - 7.0V
  Vout=1.25 - 5.0V
  I out=8.0A *(no air flow required).*
- High Efficiency: 86 to 95%
- Excellent Transient Response
- Small Size: 550X2500mils, vertical mounting
- Power Good output

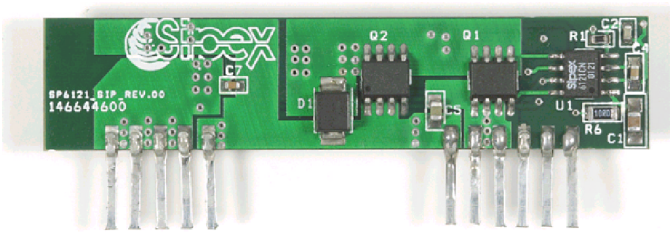

DESCRIPTION

The **SP6121 DEMO Board** is designed to help the user evaluate the performance of the SP6121 for use in a distributed power system. The SP6121 operates over an input voltage range of 3.0V to 7.0V, and can deliver efficiencies as high as 95%. The SP6121 Demo Board is a complete Power Supply ready for use in applications where high stability, excellent transient response, high efficiency and power density are critical concerns.

The Demo Board, a completely assembled and tested PCB with surface mount components, has been designed as a SIP board that can be vertically mounted in an existing application.

BOARD SCHEMATIC and LAYOUT

The **SP6121 Demo Board** is configured as a highly efficient, synchronous DC/DC buck converter. It has been optimized to deliver excellent thermal and EMI performance.

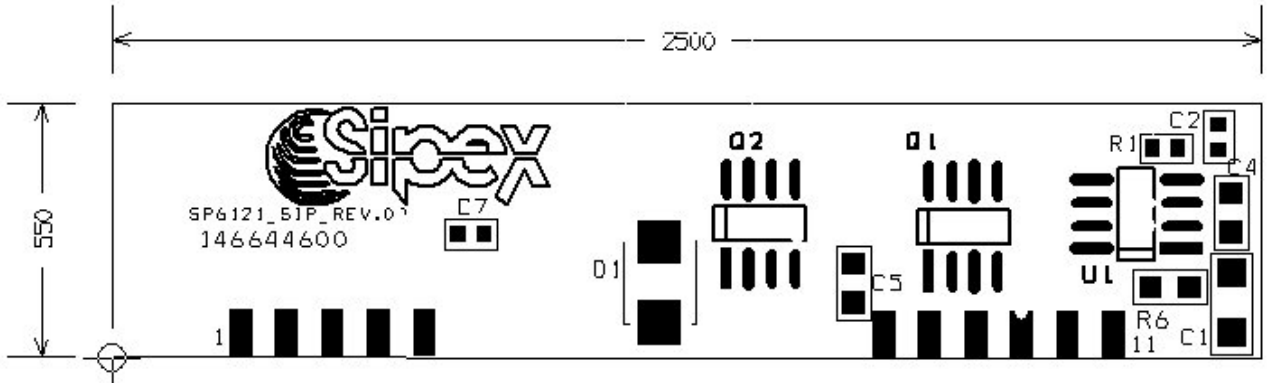

FIGURE 1. SP6121 Demo Board – layer 1, top view.

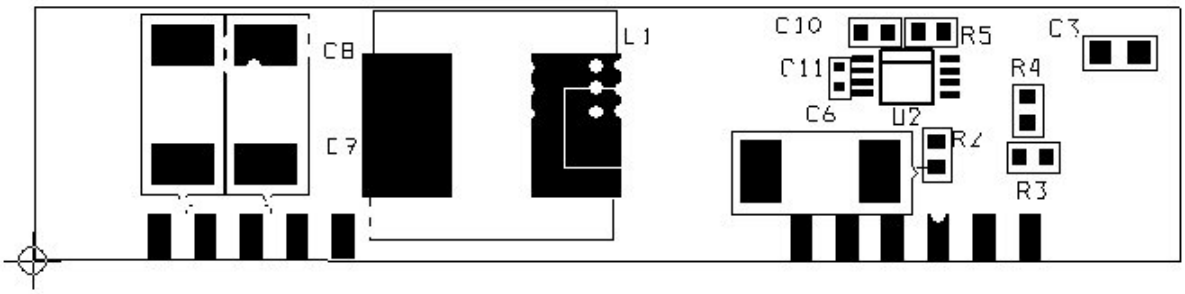

FIGURE 2. SP6121 Demo Board, layer 4, top view.

The SP6121 Demo Board has four, 2 oz copper layers that provide improved noise immunity and minimize power losses. Components are placed on the top and bottom sides of the PCB as shown on Figures 1and 2. The row of pads (1 to 11) at the edge of the board is designed for solderable pins such as the NAS Interplex forked pins (17 x 42 mil cross section). Pin connections to the demo board circuit are indicated in Figure 3. (Pad 11 is a no connect.)

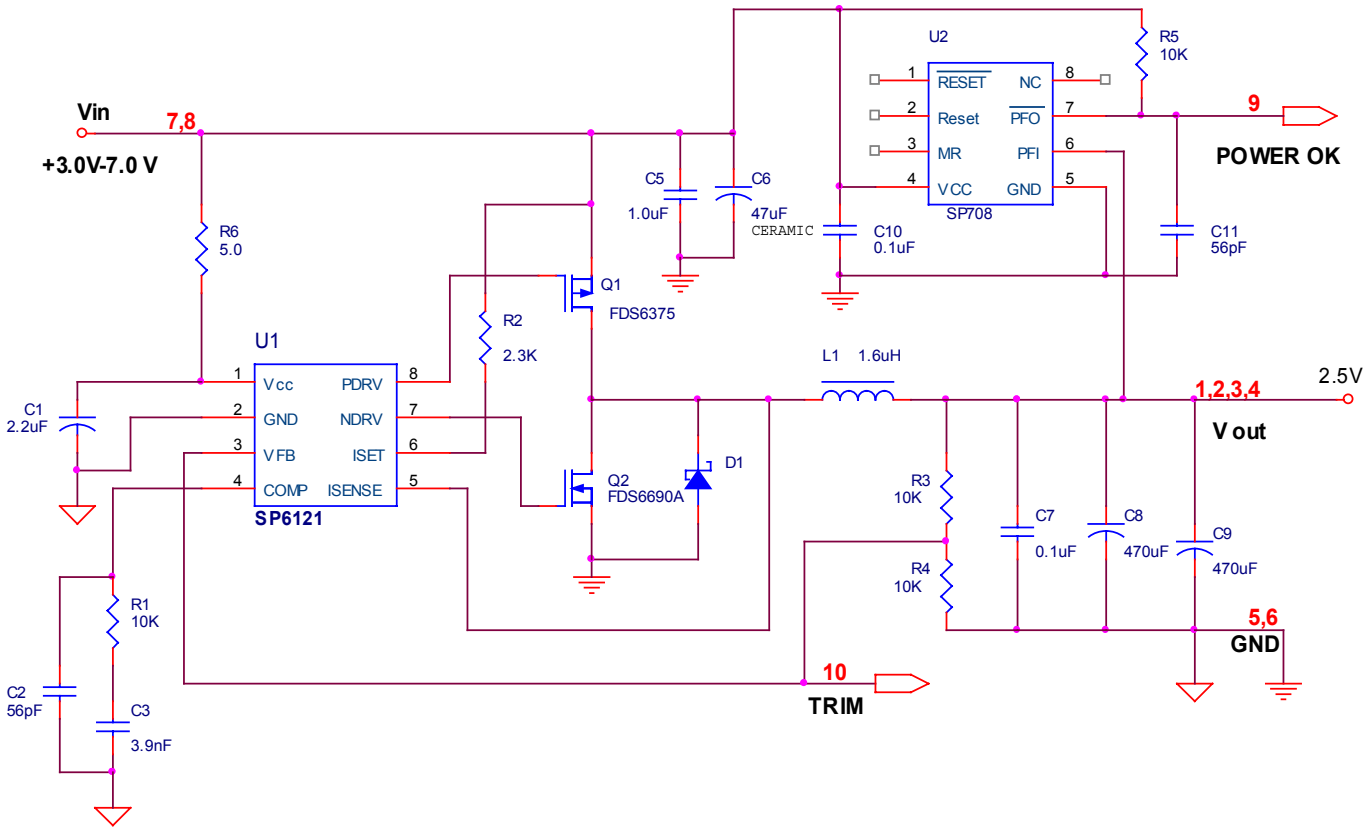

FIGURE 3. SP6121 Demo Board Schematic.

Demo Board Component Selection

The input capacitor, **C6**, can be either a ceramic or tantalum capacitor. Its choice depends on the user's system input voltage transient. If the highest possible efficiency is required, a ceramic **47uF** capacitor is recommended.

The demo board circuit includes a Schottky Diode, D1, across the low side switch. It prevents Q2's internal body diode from turning on and dissipating power during the nonoverlap time when both Q1 and Q2 are off. At a 500kHz switching frequency, these losses would decrease overall efficiency by 0.5 – 0.6%.

The output voltage is set by the resistor divider: R3/R4. The output voltage is calculated using the following:

$$V_{OUT} = \left(\frac{R_3}{R_4} + 1\right) V_{REF},$$

where V_{REF} = 1.25V.

For the SP6121 demo board where V_{OUT} = 2.5V. Choosing R4 equal to 10K, then

$$R_3 = R_4 = 10K$$

The considerations, tradeoffs and calculations required to select the power MOSFETs (Q_1, Q_2), the inductor (L_1), the input and output capacitors (C_1, and C6, C_8, and C_9,

respectively), and the current set resistor (R_2), are discussed in detail in the SP6121 data sheet.

USING THE DEMO BOARD

To use the Demo Board, connect the input voltage, V_{IN} to pins **7** and **8** and a ground, GND, to pins **5** and **6.** Connect the load to pins **1, 2, 3,** and **4.** Pin **9** provides a logic level "power good" signal and Pin **10** is used for trimming the output voltage.

When measuring efficiency, care must be taken to keep leads between measuring devices, the power supply (V_{IN}) and the demo board as short as possible and the measurement probes should be connected to pins 4 (V_{OUT}) and 7 (V_{IN}).

The SP708 power management controller IC (U_2) on the demo board is used to generate a Power Good signal. On this demo board, when the voltage on the pin 6 (PFI) of U2 is 1.25V or less, U2's pin 7 (PFO) goes LOW. Pin 6 can be connected directly, or through a resistor divider, to V_{OUT} or V_{IN}.

DEMO BOARD CHARACTERISTICS

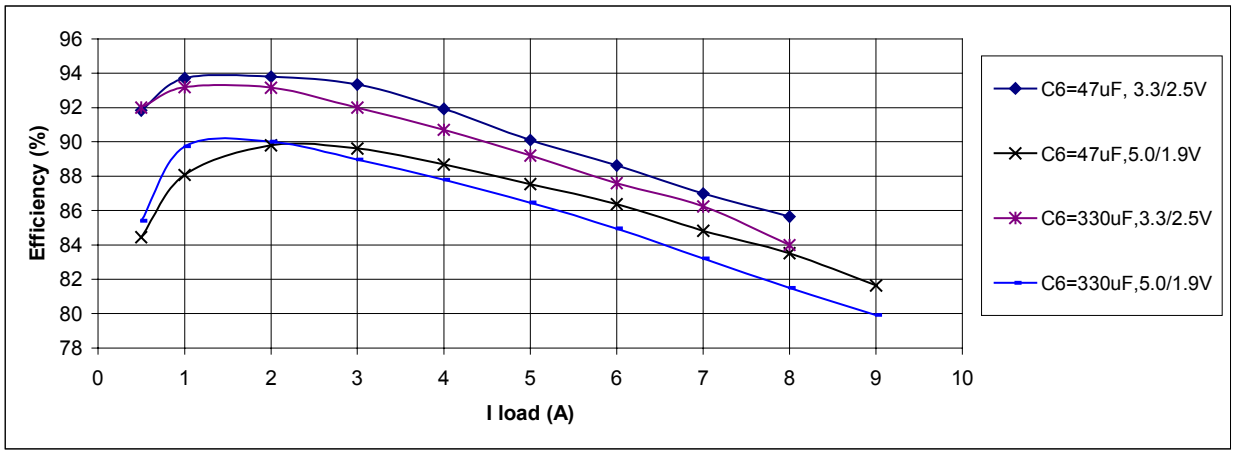

FIGURE 4. EFFICIENCY vs. I load. Vout=2,5V

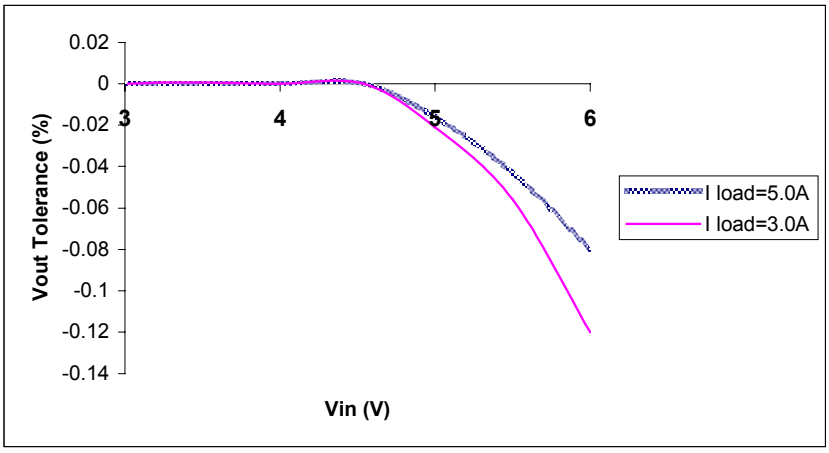

FIGURE 5. Line Regulation. Vout=2.5V

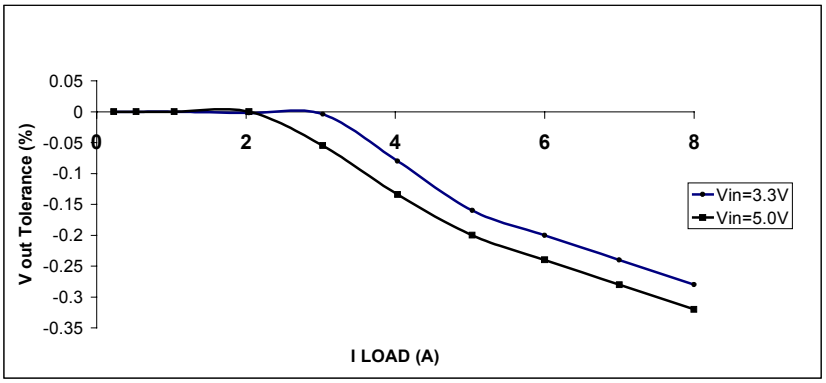

FIGURE 6. Load Regulation. Vout=2.5V

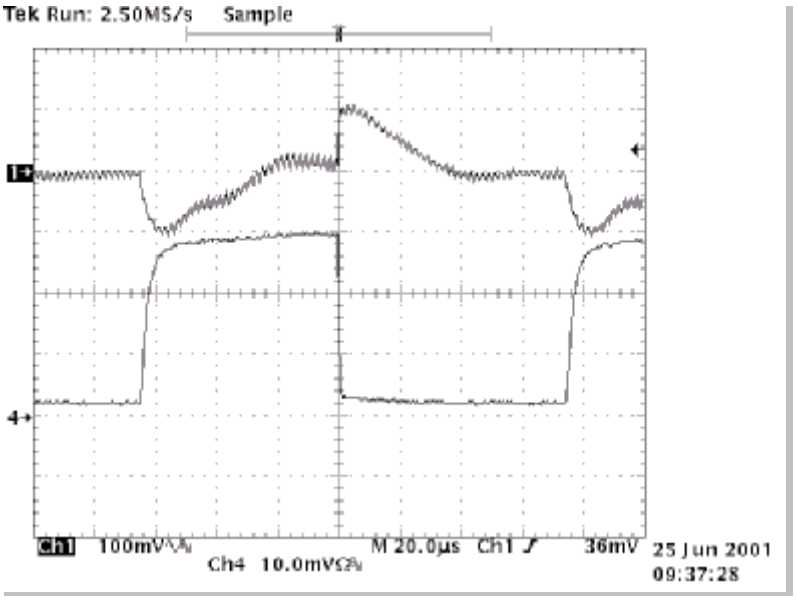

FIGURE 7. Load Step Response. I load step 0.4A to 6.0A. CH1-Vout; CH4-I load. Vin=5.0V, Vout=2.5V

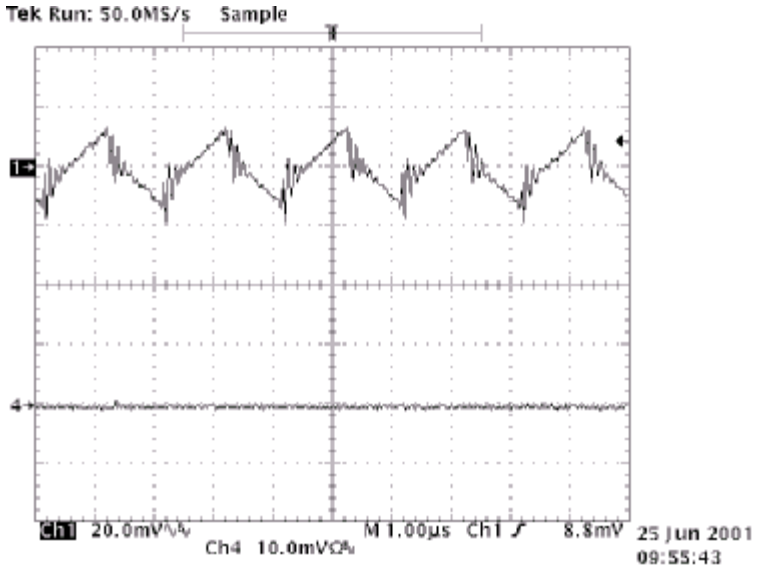

FIGURE 8. Output Ripple. Vin=5.0V,Vout=2.5V, Iload=6.0A

DEMO BOARD RECOMMENDED PARTS:

No.	Qty		Part	Manuf.	Manuf. P/N / PACKAGE
1	1	C1	Capacitor Ceramic 2.2uF/16V/X7R/10%	Any Approved	Package 1206
2	2	C2,C11	Capacitor Ceramic 56pF/50V/X7R/10%	"-"	603
3	1	C3	Capacitor Ceramic 3.9nF/50V/X7R/10%	"-"	805
4	1	C5	Capacitor Ceramic 1uF/16V/X7R/10%	"-"	603
5	1	C6	Capacitor Tantalum 220uF/10V/10%	"-"	7343
		or	Capacitor Tantalum 330uF/10V/20%	"-"	1812
		or	Capacitor Ceramic 47uF/X7R/10V/10%	"-"	7343
6	2	C7,C10	Capacitor Ceramic 0.1uF/16V/X7R/10%	"-"	603
7	2	C8,C9	Capacitor Tantalum 470uF/10V/10%	"-"	7343
8	1	D1	Diode Schottky 30V/2.0A	"-"	Package DO-214AA
9	1	L1	Inductor 1.6uH/15A/3.3 mOhm	PANASONIC	ETQ-P6F1R6SFA
10	1	Q1	P-MOSFET 20V/8.0A/32mOhm	FAIRCHILD	FDS6375/ SO-8
11	1	Q2	N_MOSFET 30V/13A/10mOhm	FAIRCHILD	FDS6690A/ SO-8
12	2	R1,R5	Resistor 10K/63mW/5%	Any Appoved	Package 603
13	1	R2	Resistor 2.1K/63mW/5%	"-"	603
14	2	R4,R3	Resistor 10K/63mW/1%	"-"	603
15	1	R6	Resistor 10 Ohm/0.63mW/5%	"-"	603
16	1	U1	SYNCH. BUCK CONTROLLER	SIPEX	SP6121/SO-8
17	1	U2	Low Power Microprocessor Supervisory Circuits	SIPEX	SP708/ uSOIC-8
18	11	Pins	17X42 mils Cross Section	NAS Interplex	

Reliability and Qualification Report

Silan BC1 Process Reliability Qualification using the SP6128A

Prepared By: Salvador Wu & Greg West
QA Engineering
Date: January 2, 2007

Reviewed By: Fred Claussen
VP Quality & Reliability
Date: January 2, 2007

Table Of Contents

Title Page	1
Table of Contents	2
Device Description	2
Pin Out	2
Manufacturing Information	2
Package Information	2
Reliability Test Summary	3
Life Test Data	3
FIT Data Calculations	4
MTBF Data Calculations	4
ESD Testing	4
Latch-up Testing	4
14L TSSOP Pb Free Package Qualification Addendum	4

Device Description:

The SP6128A is a fixed frequency, voltage mode, synchronous PWM controller designed to work from a single 5V or 3.3V input supply, providing excellent AC and DC regulation for high efficiency power conversion. Requiring only few external components, the SP6128A packaged in a 14-pin TSSOP, is especially suited for low voltage applications where cost, small size and high efficiency are critical. The operating frequency is internally set to 300kHz, allowing small inductor values and minimizing PC board space. The SP6128A drives two N-channel power MOSFETs for improved efficiency and includes an accurate 0.8V reference for low output voltage applications.

Manufacturing Information:

Product: SP6128A

Description: Low Voltage Sync. Buck Controller

Mask Set(s): MS1236

Lot Number(s): CF10190.1, CF10191.1, CF10192.1

Process: sil-bc1
Wafer Fab: Silan

Package Information:

Package Type: 14 pin TSSOP
Package Code: JEDEC

PIN OUT SP6128A

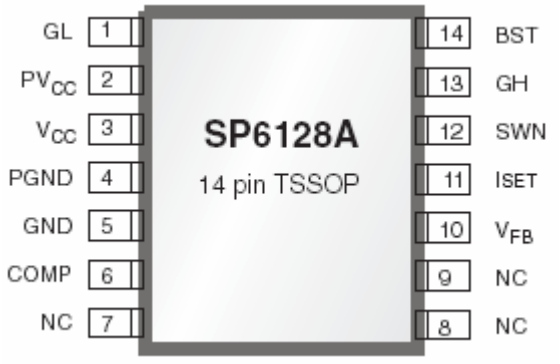

Reliability Qualification Test Summary:

Stress Level	Device	Lot Number	Burn-In Temp	Sample Size	No. Fail
168Hrs	SP6128A	CF10190.1	125 °C	77	0
168Hrs	SP6128A	CF10191.1	125 °C	77	0
168Hrs	SP6128A	CF10192.1	125 °C	77	0
1000Hrs	SP6128A	CF10190.1	125 °C	77	0
1000Hrs	SP6128A	CF10191.1	125 °C	77	0
1000Hrs	SP6128A	CF10192.1	125 °C	77	0

Life Test

Life testing is conducted to determine if there are any fundamental reliability related failure mechanism(s) present in the device.

These failure mechanisms can be divided roughly into four groups:

1. Process or die related failures such as oxide defects, metallization defects, and diffusion defects.
2. Assembly related failures such as chip mount defects, wire bond defects, molding defects, and trim/form/singulation defects.
3. Design related defects.
4. Miscellaneous, undetermined, or application induced failures.

125C Operating Life Test Results

As part of the Sipex design qualification program, the Product/Reliability Engineering group subjected 231 parts to 168 hours of 125° C life stress testing and then to 1000 hours of 125° C life stress testing.

168 Hour Timepoint

The 231 parts were subjected to the life test profile and completed the first phase with no failures.

1000 Hour Timepoint

231 parts were reintroduced to life stress testing, completing the 1000 hour HTOL time point without any failures or significant shifts in process parameters.

FIT Rate Calculations

FIT rate (failures in time) is the predicted number of failures per billion device hours.

This predicted value is based upon,

- The Life Test conditions summarized in the HTOL table (time/temperature, device quantity, failure quantity).
- The Activation Energy (E_a) for potential failure modes. The weighted Activation Energy(E_a) of observed failure mechanisms for Sipex products has been determined to be 0.8eV.

Based on the above criteria SP6128A product FIT rates for 25°, 55°, and 70°C of operation at 60% and 90% confidence levels have been calculated and listed below.

FIT Failure Rates: SP6128A BC1 Silan Process

Confidence Level	+25°C	+55°C	+70°C
60%	2.4	35.3	113.2
90%	6.3	90.6	290.3

1 FIT = 1 Failure per Billion Device-Hours

MTBF Calculation: SP6128A BC1 Silan Process

Confidence Level	+25°C	+55°C	+70°C
60%	4.09E+08	2.83E+07	8.83E+06
90%	1.60E+08	1.10E+07	3.44E+06

ESD Testing

Human Body Model ESD – 77 units were subjected to Human Body Model ESD testing at +/- 2KV. All units passed.

Latch-up Testing

JED-STD Latch-up Testing 85C - 77 units from the qualification lot were subjected to JED-STD Latch-up testing at 85C. All units passed at +/-200mA.

Additional Reliability Tests

77 of the units were placed on -65C/+150C Temperature Cycle testing, 77 of the units were placed on Highly-Accelerated Temp. and Humidity Stress testing (130C, 85% RH), 200 of the units were placed on ELFR testing and 77 on -65C/+150C Thermal Shock testing. All units passed testing as summarized in the following table.

Test	Condition	Time	Sample Size	# of rejects
TEMP. Cycles	-65C/+150C	1000 Cycles	77	0
HAST Unbiased	130C/85%RH	96hrs	77	0
ELFR	125C	48hrs	200	0
Thermal Shock	-65C/+150C	500 Cycles	77	0