MITEL
SEMICONDUCTOR

SP5748

2.4GHz Very Low Phase Noise PLL

Advance Information

DS4875 - 1.3 November 1998

The SP5748 is a single chip frequency synthesiser designed for tuning systems up to 2.4 GHz and is optimized for low phase noise with comparison frequencies up to 4 MHz. It is designed to be downwards software compatible with the SP5658.

The RF programmable divider contains a front end dual modulus 16/17 functioning over the full operating range and allows for coarse tuning in the upconverter application and fine tuning in the downconverter.

Comparison frequencies are obtained either from a crystal controlled on-chip oscillator or from an external source. a buffered reference frequency output is also available to drive a second SP5748.

The device also contains 2 switching ports.

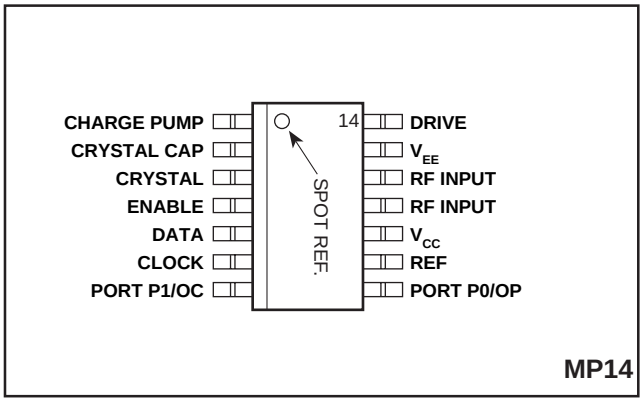

Figure1 Pin connections - top view

FEATURES

- Complete 2.4 GHz single chip system (for faster device refer to to SP5768)
- Optimised for low phase noise, with comparison frequencies up to 4 MHz
- No RF prescaler
- Selectable reference division ratio
- Reference frequency output
- Selectable charge pump current
- Integrated loop amplifier
- Two switching ports
- Low power replacement for SP5658 and 5668
- Downwards software compatible with SP5658
- ESD protection, (Normal ESD handling procedures should be observed)

APPLICATIONS

- TV, VCR and Cable tuning systems
- Communications systems

ORDERING INFORMATION

SP5748/KG/MP1S (Tubes)
SP5748/KG/MP1T (Tape and Reel)

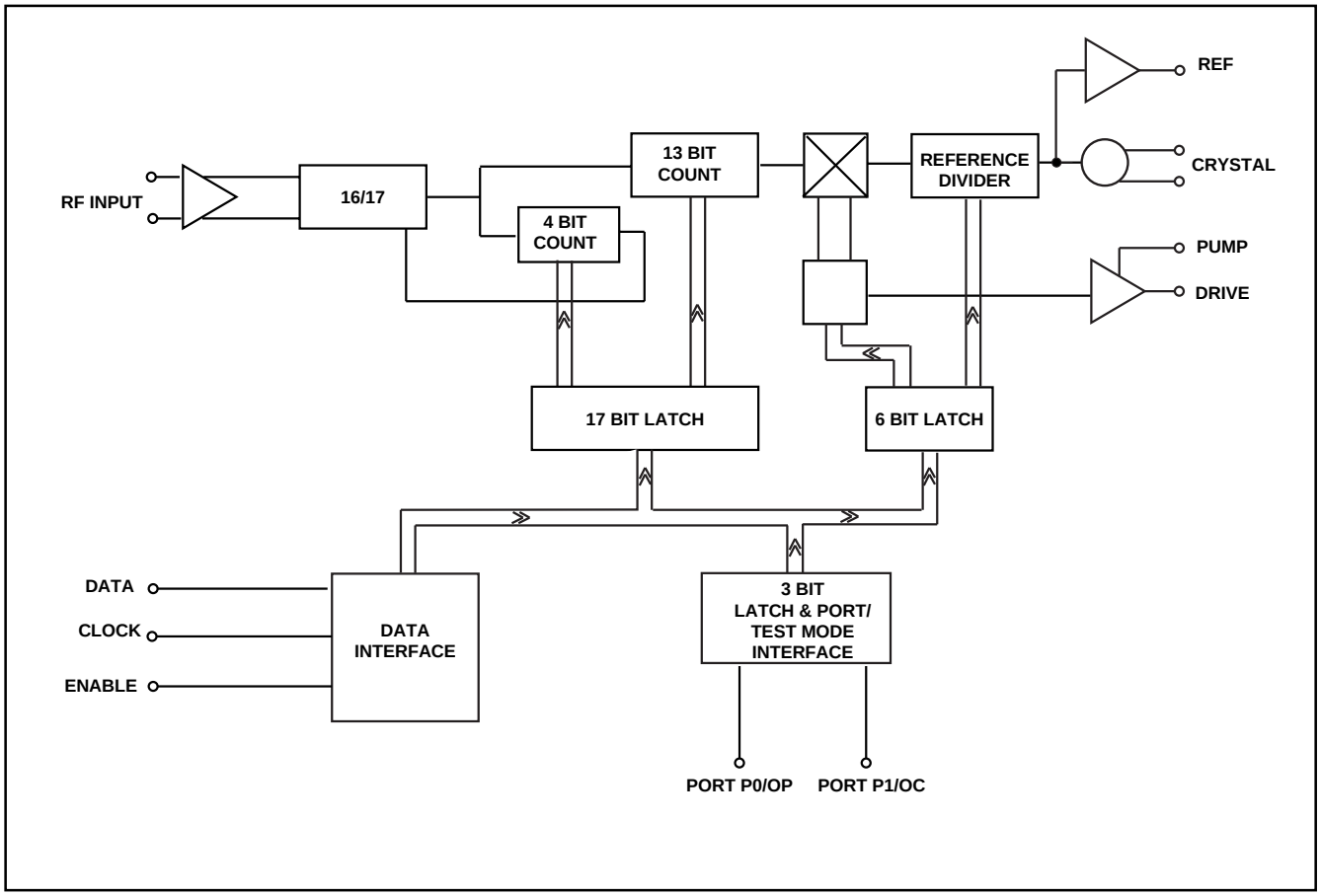

Figure 2 SP5748 block diagram

ELECTRICAL CHARACTERISTICS

These characteristics are guaranteed by either production test or design. They apply within the specified ambient temperature and supply voltage unless otherwise stated.

T_{AMB} = -40°C to 80°C, V_{CC} = +4·5V to +5·5V

Characteristic	Pin	Value			Units	Conditions
		Min	Typ	Max		
Supply current	10		13		mA	
RF input frequency range	11,12	80		2400	MHz	
RF input voltage	11,12	30		300	mV rms	
RF input impedance	11,12					See Figure 3
Data, clock & enable	5,6,4					
input high voltage		3		Vcc	V	
input low voltage		0		0.7	V	
input current		-10		10	µA	All input conditions
hysterysis			0.8		V_{PP}	

ELECTRICAL CHARACTERISTICS (continued)

These characteristics are guaranteed by either production test or design. They apply within the specified ambient temperature and supply voltage unless otherwise stated.

T_{AMB} = -40°C to 80°C, V_{CC} =+ 4·5V to +5·5V

Characteristic	Pin	Value			Units	Conditions
		Min	Typ	Max		
Clock rate	6			500	kHz	
Bus timing -		5,6,4				See Figure4
data set up		300			ns	
data hold		600			ns	
enable set up		300			ns	
enable hold		600			ns	
clock to enable		300			ns	
Charge pump output current	1					See Figure 5, Vpin1 = 2V
Charge pump output leakage	1		+-3	+-10	nA	Vpin1=2V
Charge pump drive output current	14	0.5			mA	Vpin 14=0.7V
Crystal frequency	2,3	2		20	MHz	See Figure 6 for application
Recommended crystal		10		200	Ω	4 MHz parallel resonant crystal. series resistance
Oscillator temperature stability				TBC	ppm/^{o}C	
Oscillator supply voltage stability				TBC	ppm/V	
External reference input frequency	2	2		20	MHz	Sinewave coupled through TBA nF blocking capacitor
External reference drive level	2	0.2		0.5	V_{pp}	Sinewave coupled through TBA nF blocking capacitor
Buffered reference frequency output *	9					AC coupled
output amplitude			0.35		Vpp	2-20MHz
output impedance			TBC		Ω	

ELECTRICAL CHARACTERISTICS

These characteristics are guaranteed by either production test or design. They apply within the specified ambient temperature and supply voltage unless otherwise stated.

T_{AMB} = -40°C to 80°C, V_{CC} = +4·5V to +5·5V

Characteristic	Pin	Value			Units	Conditions
		Min	Typ	Max		
Comparison frequency				4	MHz	
Equivalent phase noise at phase detector		-148			dBc/Hz	@10 kHz, SSB, with 2 MHz comparison from 4 MHz crystal reference
RF division ratio		240		131071		
Reference division ratio						see figure (7)
Output ports P0-P1#	7, 8					
sink current			2			mA Vport = 0.7V
leakage current				10	µA	Vport = Vcc

* Reference output disabled by connecting to Vcc if not required

′ Output ports high impedance on power up, with data, clock and enable at logic 0

ABSOLUTE MAXIMUM RATINGS

All voltages are referred to V_{EE} at 0V

Characteristic	Pin	Min	Typ	Max	Units	Conditions
Supply voltage, Vcc	10	-0.3		7	V	
RF input voltage	11,12			2.5	V_{p-p}	Differential across pins 11 and 12
RF input DC offset	11,12	-0.3		V_{cc}+0.3	V	
Port voltage	7,8	-0.3		V_{cc}+0.3	V	
Charge pump DC offset	1	-0.3		V_{cc}+0.3	V	
Varactor drive DC offset	14	-0.3		V_{cc}+0.3	V	
Crystal DC offset	2,3	-0.3		V_{cc}+0.3	V	
Buffered ref output	9	-0.3		V_{cc}+0.3	V	
Data, clock & enable DC offset	5,6,4	-0.3		V_{cc}+0.3	V	
Storage temperature		-55		+125	°C	
Junction temperature				+150	°C	
MP14 thermal resistance, chip to ambient chip to case				81 27	°C/W °C/W	
Power consumption at V_{cc}=5.5V				TBC	mW	All ports off
ESD protection		2			kV	Mil-std 883B latest revision method 3015 cat.1.

Functional description

The SP5748 contains all the elements necessary, with the exception of a frequency reference, loop filter and external high voltage transistor, to control a varicap tuned local oscillator, so forming a complete PLL frequency synthesised source. The device allows for operation with a high comparison frequency and is fabricated in high speed logic, which enables the generation of a loop with excellent phase noise performance, even with high comparison frequencies.

The package and pin allocation is shown in Figure 1 and the block diagram in Figure 2.

The SP5748 is controlled by a standard 3-wire bus comprising data, clock and enable inputs. The programming word contains 26 bits, two of which are used for port selection, 17 to set the programmable divider ratio, four bits to select the reference division ratio, bits RD & R0-R2, see Figure 7, two bits to set charge pump current, bit C0 and C1, see Figure 5, and the remaining bit to access test modes, bit T0, see Figure 8. The programming format is shown in Figure 4.

The clock input is disabled by an enable low signal, data is therefore only loaded into the internal shift registers during an enable high and is clocked into the controlling buffers by an enable high to low transition. This load is also synchronised with the programmable divider so giving smooth fine tuning.

The RF signal is fed to an internal preamplifier, which provides gain and reverse isolation from the divider signals. The output of the preamplifier is fed to the 17 bit fully programmable counter, which is of MN+A architecture. The M counter is 13 bit and the A counter 4

The output of the programmable counter is fed to the phase comparator where it is compared in both phase and frequency domain with the comparison frequency. This frequency is derived either from the on board crystal controlled oscillator or from an external reference source. In both cases the reference frequency is divided down to the comparison frequency by the reference divider which is programmable into1 of 16 ratios as descried in Figure 7.

The output of the phase detector feeds the charge pump and loop amplifier section, which when used with an external high voltage transistor and loop filter integrates the current pulses into the varactor line voltage. The charge pump current setting is described in Figure 5,

A buffered crystal reference frequency suitable for driving further synthesisers is available from pin 9. If not required this output can be disabled by connecting to Vcc

The programmable divider output divided by 2, Fpd/2 and comparison frequency, Fcomp can be switched to ports P0 and P1 respectively by switching the device into test mode. The test modes are described in Figure 8.

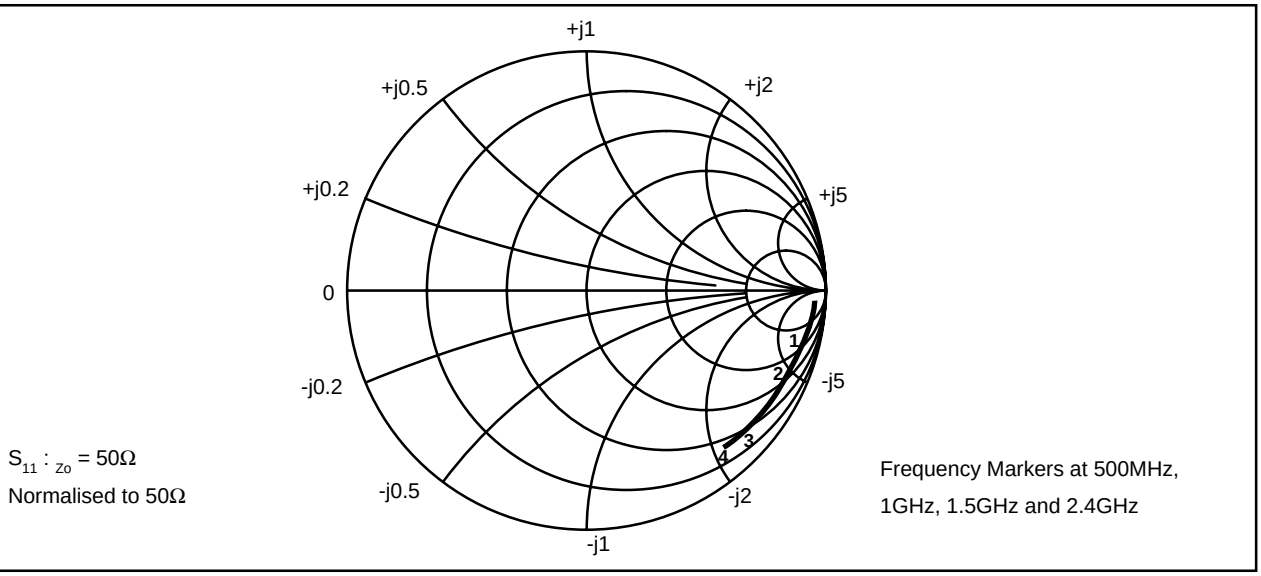

Figure 3 RF input impedance

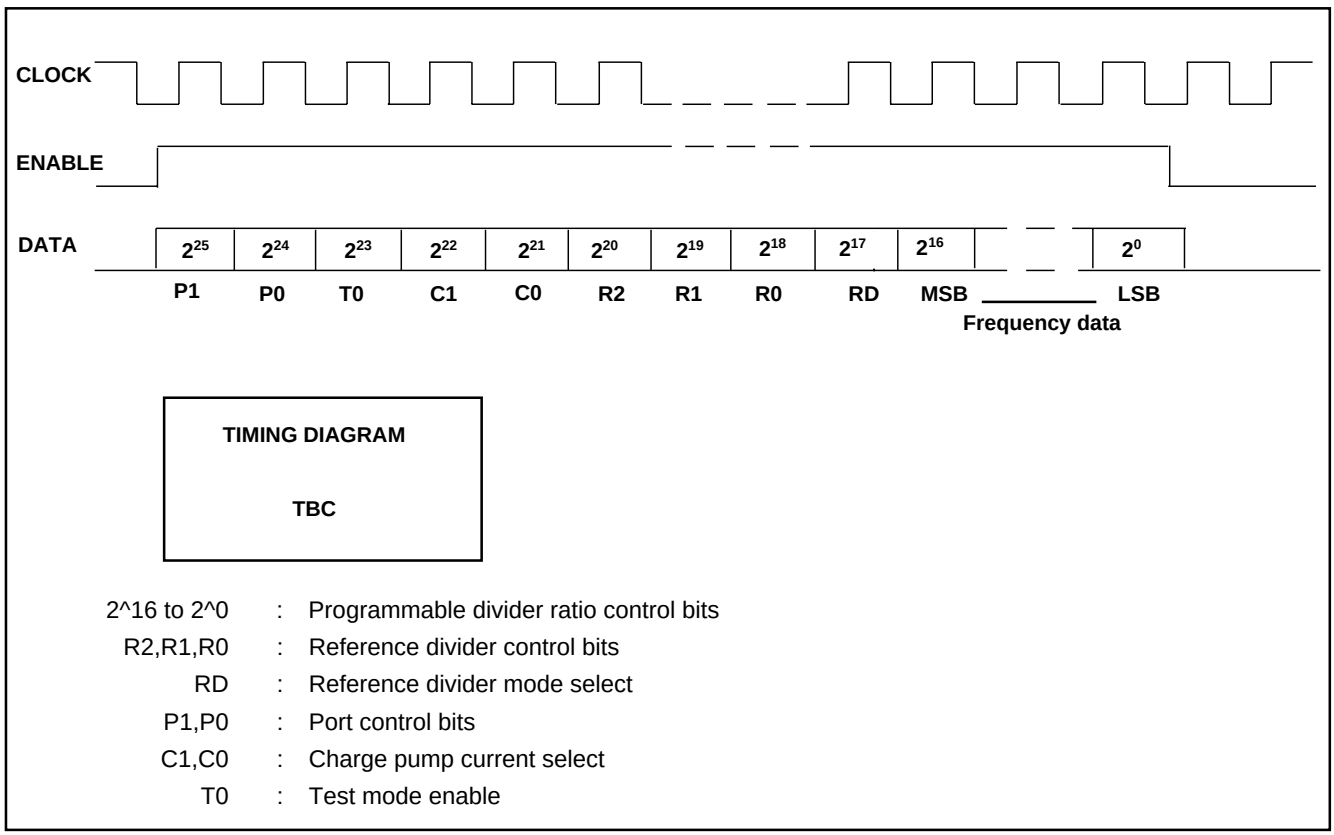

2^16 to 2^0 : Programmable divider ratio control bits
R2,R1,R0 : Reference divider control bits
RD : Reference divider mode select
P1,P0 : Port control bits
C1,C0 : Charge pump current select
T0 : Test mode enable

Figure 4 Data format

C1	C0	Current (in mA)
0	0	0.2
0	1	0.9
1	0	.1
1	1	.45

Figure 5 Charge pump current

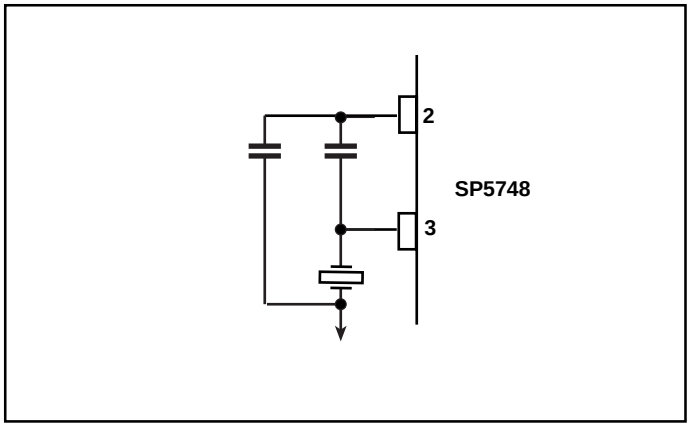

Figure 6 Crystal oscillator application

RD	R2	R1	R0	RATIO
0	0	0	0	2
0	0	0	1	4
0	0	1	0	8
0	0	1	1	16
0	1	0	0	32
0	1	0	1	64
0	1	1	0	128
0	1	1	1	256
1	0	0	0	3
1	0	0	1	5
1	0	1	0	10
1	0	1	1	20
1	1	0	0	40
1	1	0	1	80
1	1	1	0	160
1	1	1	1	320

Figure 7 Reference division ratio

P1	P0	T0	FUNCTIONAL DESCRIPTION
X	X	0	Normal operation
0	0	1	Charge pump sink
0	1	1	Charge pump source
1	0	1	Charge pump disable
1	1	1	Port P1 = Fcomp, P0 = Fpd/1

X = don't care

Figure 8 Test modes

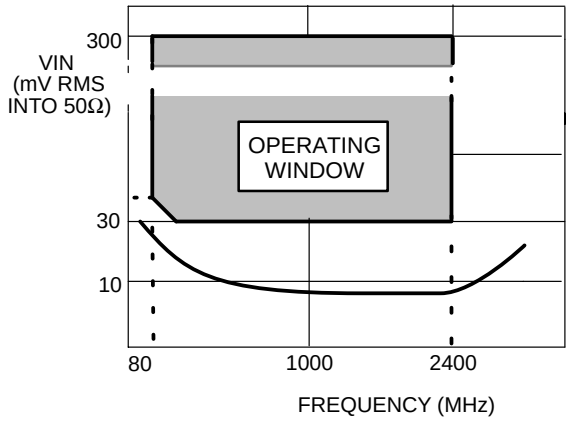

Figure 9 Typical input sensitivity

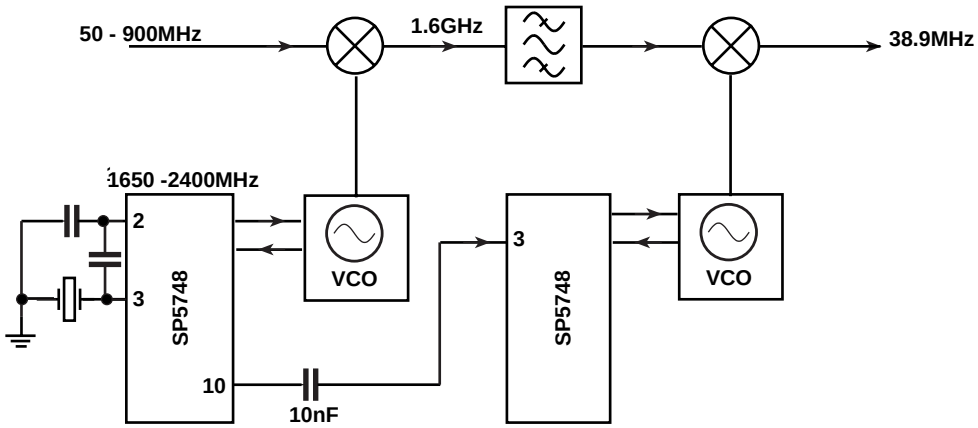

Figure 10 Example of double conversion from VHF/UHF frequencies to TV IF

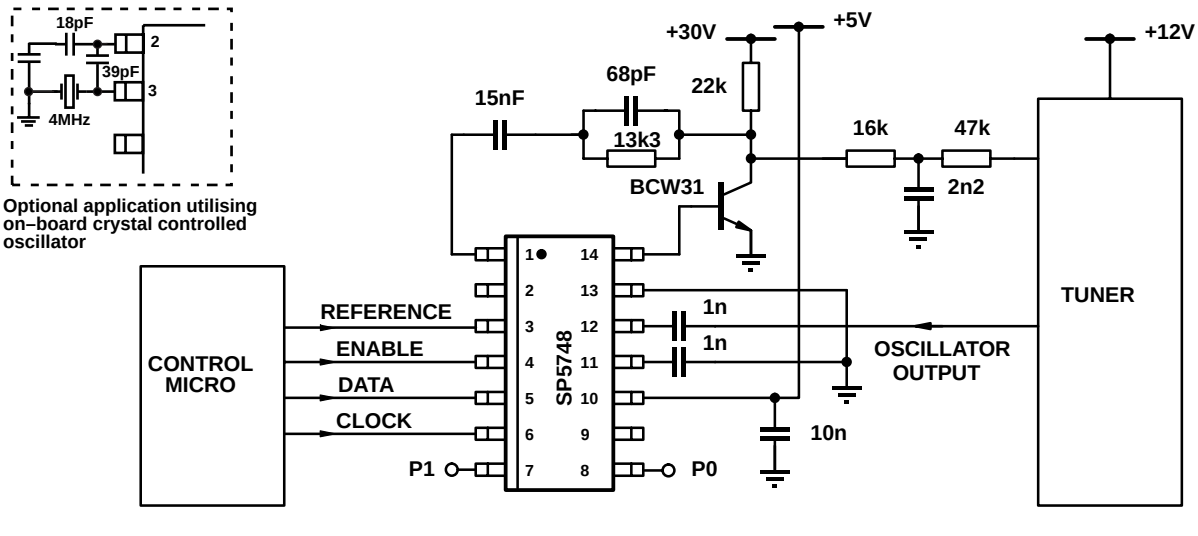

Figure 11 Typical application SP5748

APPLICATION NOTES

A generic set of application notes AN168 for designing withsynthesisers such as the SP5748 has been written. This covers aspects such as loop filter design and decoupling. Thisapplication note is also featured in the Media Data Book, or refer to the Mitel Semiconductor Internet Site http://www.Mitelsemi.com. A generic test/ demo board has been produced which can be used for the SP5748. A circuit diagram is shown in Figure 12.

The board can be used for the following purposes:

(A) Measuring RF sensitivity performance.

(B) Indicating port function.

(C) Synthesising the voltage controlled oscillator.

(D) Testing of external reference.

(E) Measurement of phase noise performance.

REFERENCE SOURCE

The SP5748 offers optimal LO phase noise performance when operated with a large step size. This is due to the fact that the LO phase noise within the loop bandwidth is:

$$\text{phase comparator noise floor} + 20 \log_{10}\left(\frac{\text{LO frequency}}{\text{phase comparator frequency}}\right)$$

Assuming the phase comparator noise floor is flat irrespective of sampling frequency, this means that the best performance will be achieved when the overall LO to phase comparator division ratio is a minimum.

There are two ways of achieving a higher phase comparator sampling frequency:–

A) Reduce the division ratio between the reference source and the phase comparator

B) use a higher reference source frequency.

Approach B) may be preferred for best performance since it is possible that the noise floor of the reference oscillator may degrade the phase comparator performance if the reference division ratio is very small.

LOOP BANDWIDTH

The majority of applications for which the SP5748 is intended require a loop filter bandwidth of between 2kHz and10kHz.

Typically the VCO phase noise will be specified at both 1kHz and10kHz offset. It is common practice to arrange the loop filter bandwidth such that the 1kHz figure lies within the loop bandwidth. Thus the phase noise depends on the synthesiser comparator noise floor, rather than the VCO.

The 10kHz offset figure should depend on the VCO providing the loop is designed correctly, and is not underdamped.

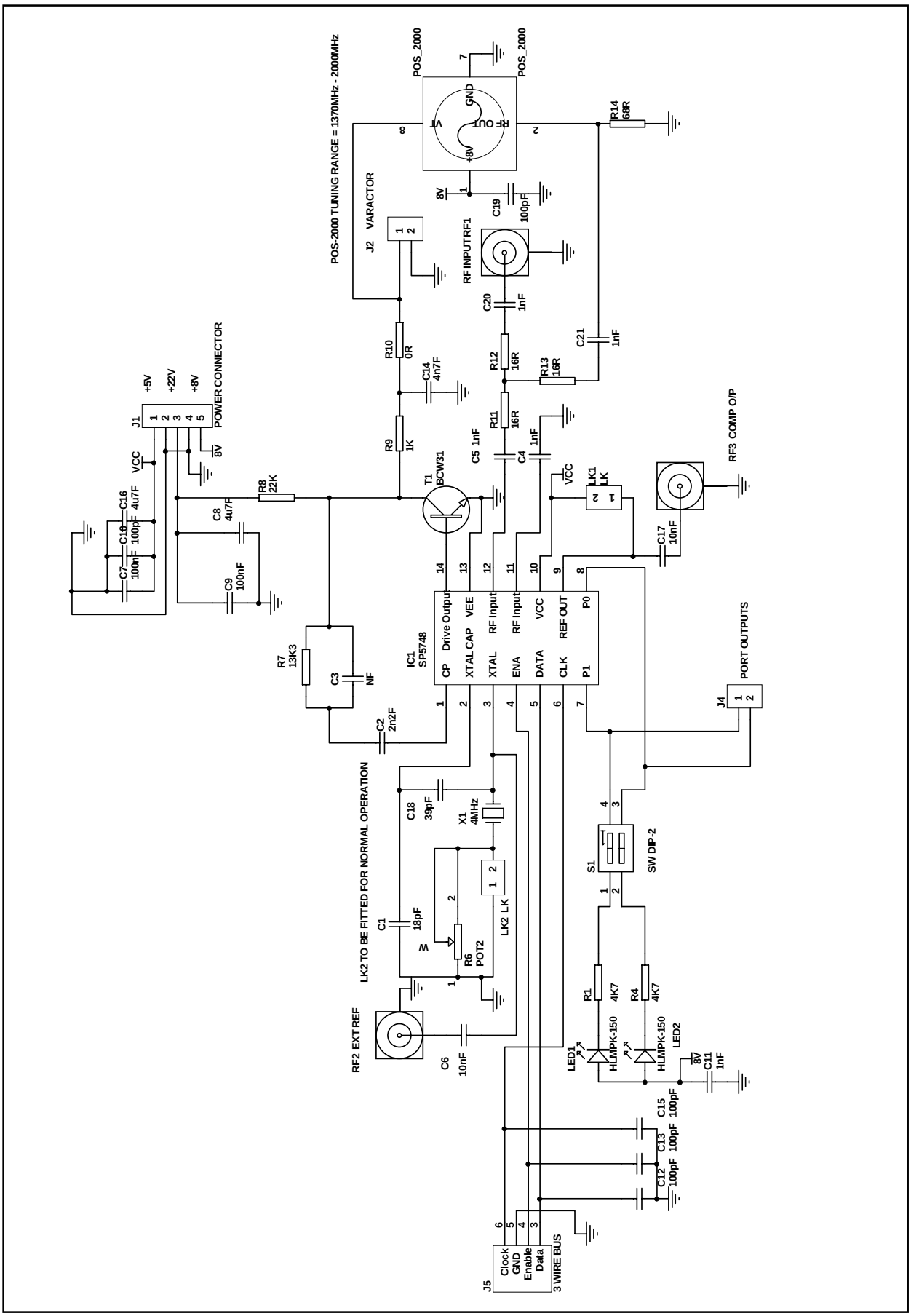

Figure 12 Evaluation Board

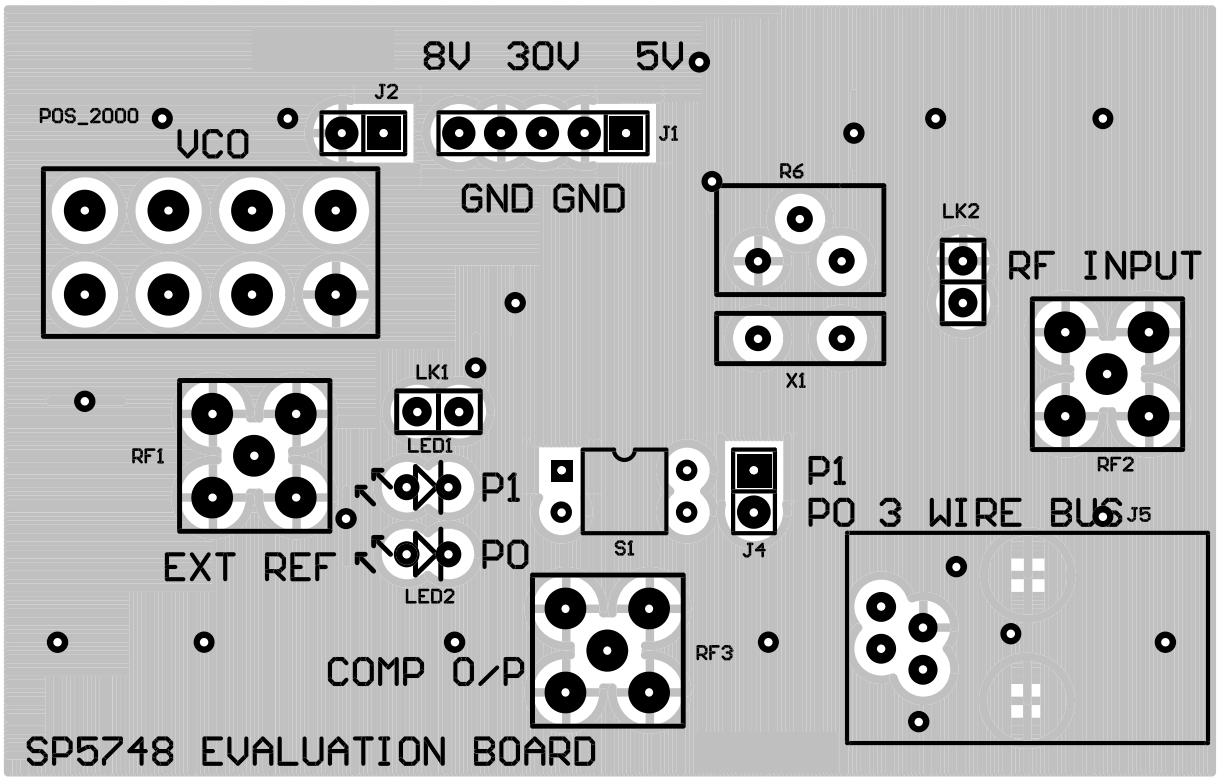

Top view

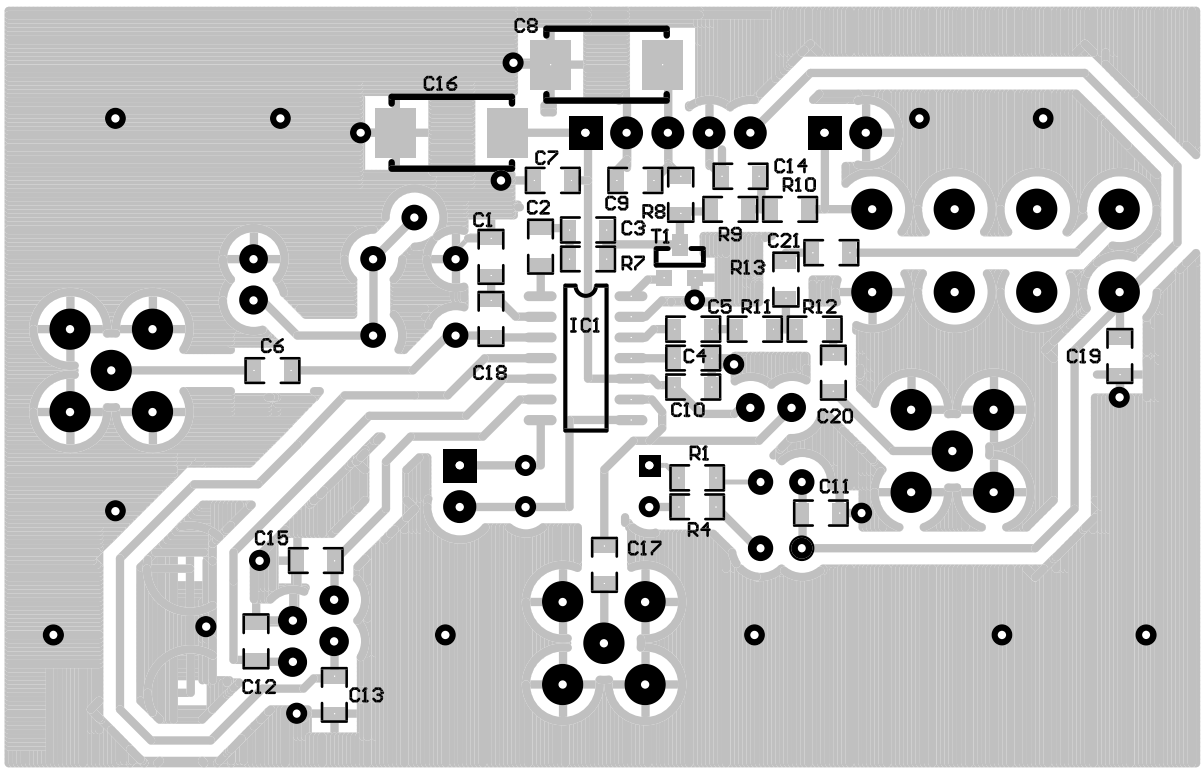

Bottom view

Figure 13

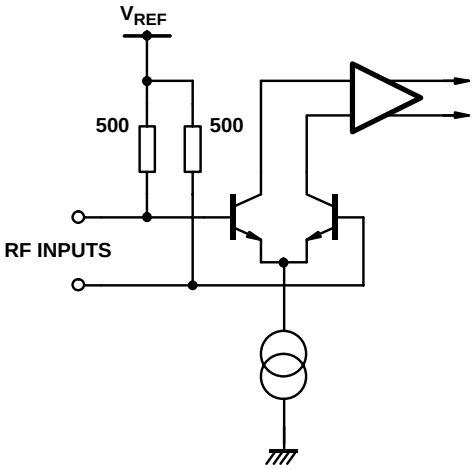

RF inputs

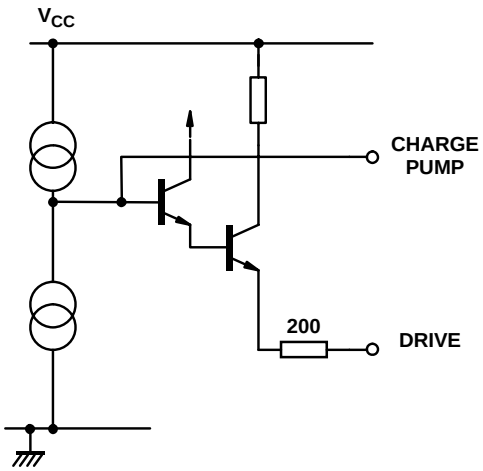

Loop amplifier

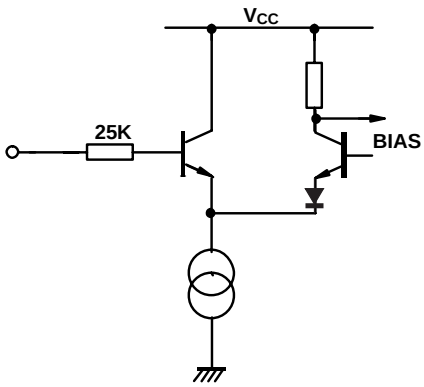

Disable, Enable, Data and Clock inputs

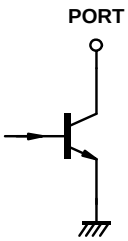

Output Ports

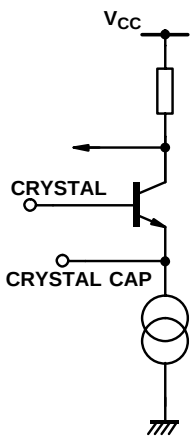

Reference oscillator

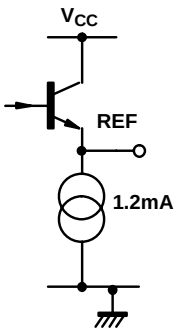

Reference output

Figure 14 Input/Output interface cicruits

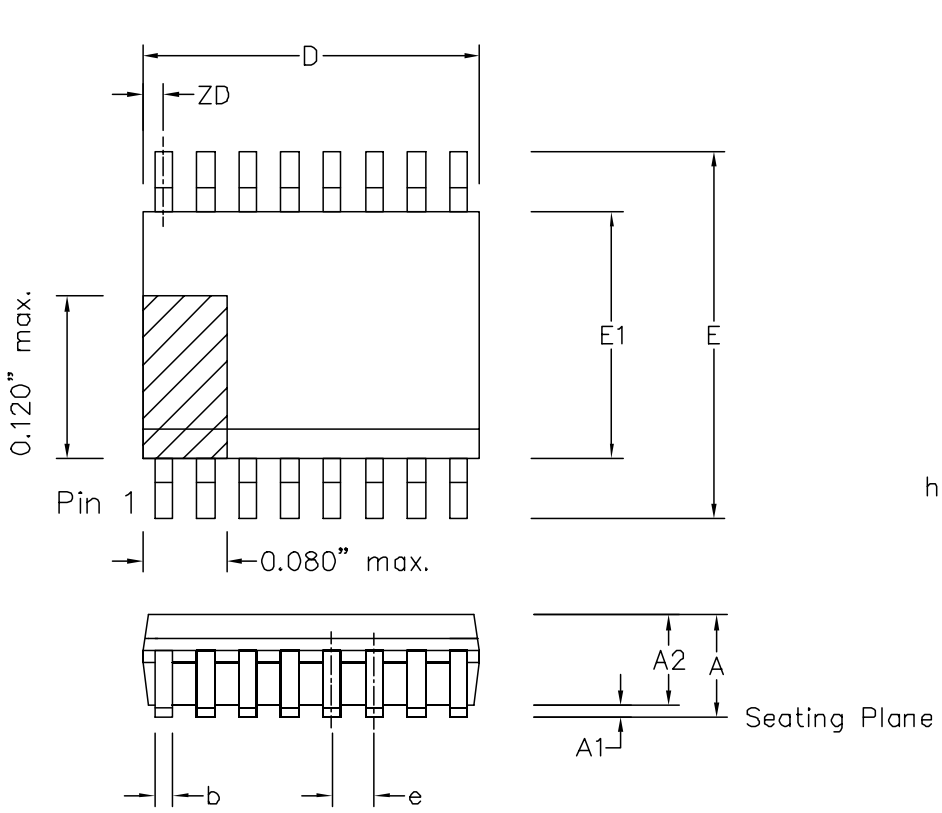

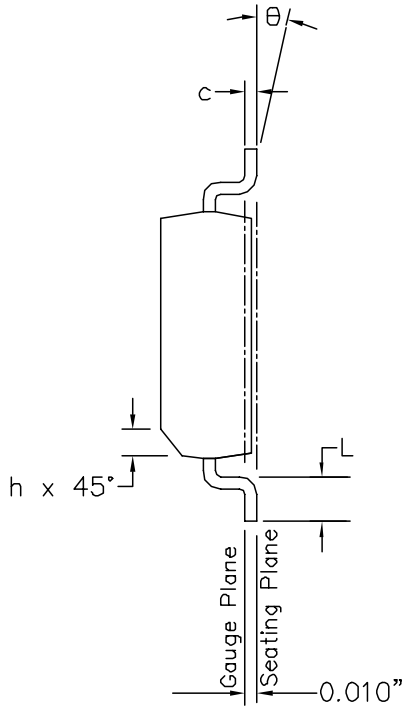

Symbol	Control Dimensions in inches		Altern. Dimensions in millimetres	
	MIN	MAX	MIN	MAX
A	0.053	0.069	1.35	1.75
A1	0.004	0.010	0.10	0.25
A2	—	0.059	—	1.50
D	0.189	0.197	4.80	5.00
ZD	0.009 REF.		0.23 REF.	
E	0.228	0.244	5.79	6.20
E1	0.150	0.157	3.81	3.99
L	0.016	0.050	0.41	1.27
e	0.025 BSC.		0.64 BSC.	
b	0.008	0.012	0.20	0.30
c	0.007	0.010	0.18	0.25
θ	0°	8°	0°	8°
h	0.010	0.020	0.25	0.50
	Pin features			
N	16			
Conforms to JEDEC MO-137AB Iss. A				

This drawing supersedes
418/ED/51617/001 (Swindon/Roborough)
TD/D 1028 (Oldham)

Notes:

1. The chamfer on the body is optional. If it is not present, a visual index feature, e.g. a dot, must be located within the cross-hatched area.
2. Controlling dimensions are in inches.
3. Dimension D do not include mould flash, protrusion or gate burrs. These shall not exceed 0.006" per side.
4. Dimension E1 do not include inter-lead flash or protrusion. These shall not exceed 0.010" per side.
5. Dimension b does not include dambar protrusion/intrusion. Allowable dambar protrusion shall be 0.004" total in excess of b dimension.

© Mitel

ORIGINATING SITE: SWINDON

ISSUE	1	2				MITEL SEMICONDUCTOR
ACN	201928	207313				
DATE	27FEB97	24AUG99				
APPRD.						

Title: Package Outline Drawing for 16L QSOP-0.150" Body Width(QP)

Drawing Number

GPD00290

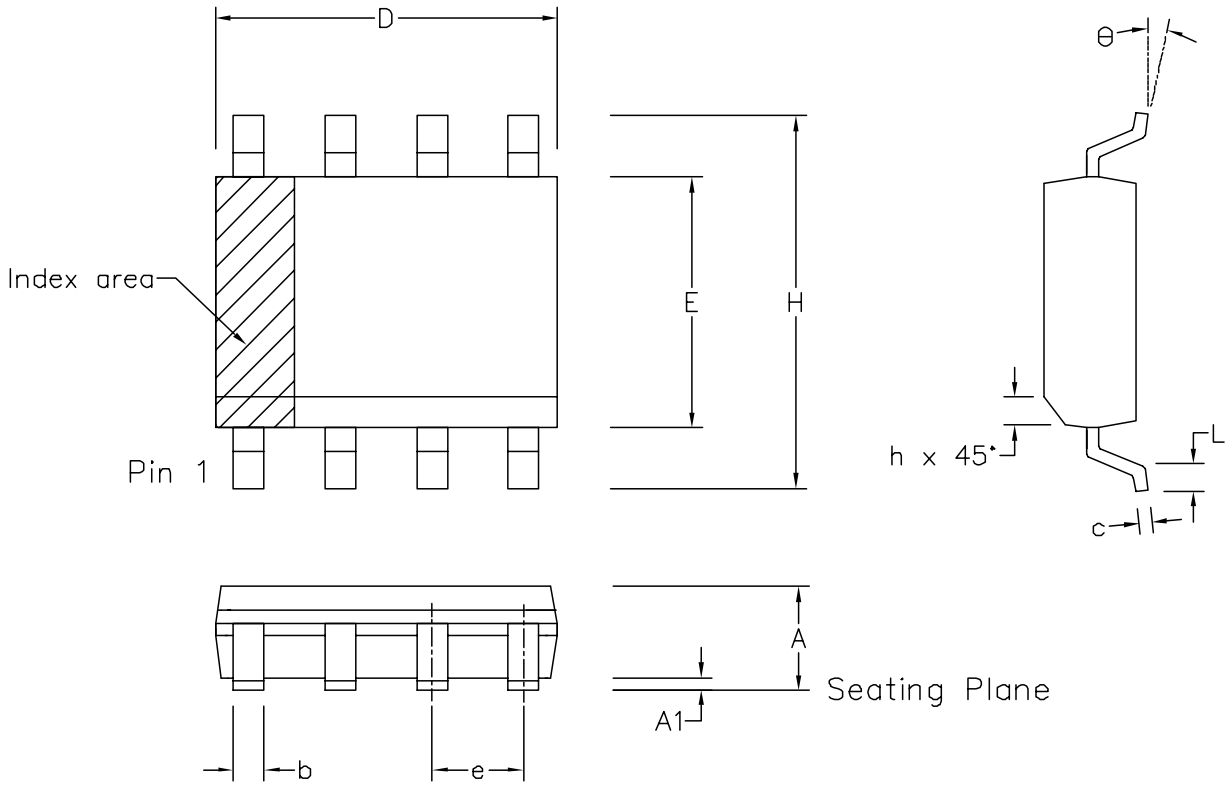

	Min mm	Max mm	Min inch	Max inch
A	1.35	1.75	0.053	0.069
A1	0.10	0.25	0.004	0.010
D	8.55	8.75	0.337	0.344
H	5.80	6.20	0.228	0.244
E	3.80	4.00	0.150	0.157
L	0.40	1.27	0.016	0.050
e	1.27 BSC		0.050 BSC	
b	0.33	0.51	0.013	0.020
c	0.19	0.25	0.008	0.010
Θ	0°	8°	0°	8°
h	0.25	0.50	0.010	0.020
	Pin Features			
N	14		14	
Conforms to JEDEC MS-012AB Iss. C				

Notes:
1. The chamfer on the body is optional. If it not present, a visual index feature, e.g. a dot, must be located within the cross-hatched area.
2. Controlling dimension are in inches.
3. Dimension D do not include mould flash, protusion or gate burrs. These shall not exceed 0.006" per side.
4. Dimension E1 do not include inter-lead flash or protusion. These shall not exceed 0.010" per side.
5. Dimension b does not include dambar protusion/intrusion. Allowable dambar protusion shall be 0.004" total in excess of b dimension.

© Mitel

ORIGINATING SITE: SWINDON

ISSUE	1	2	3	4	
ACN	006745	201937	202596	203707	
DATE	7APR95	27FEB97	12JUN97	9DEC97	
APPROVED					

MITEL SEMICONDUCTOR

Title: Package Outline Drawing for 14 lds SOIC(N)-0.150" Body Width (MP)

Drawing Number
GPD00011

MITEL SEMICONDUCTOR



http://www.mitelsemi.com

World Headquarters - Canada
Tel: +1 (613) 592 2122
Fax: +1 (613) 592 6909

North America
Tel: +1 (770) 486 0194
Fax: +1 (770) 631 8213

Asia/Pacific
Tel: +65 333 6193
Fax: +65 333 6192

Europe, Middle East, and Africa (EMEA)
Tel: +44 (0) 1793 518528
Fax: +44 (0) 1793 518581

Information relating to products and services furnished herein by Mitel Corporation or its subsidiaries (collectively "Mitel") is believed to be reliable. However, Mitel assumes no liability for errors that may appear in this publication, or for liability otherwise arising from the application or use of any such information, product or service or for any infringement of patents or other intellectual property rights owned by third parties which may result from such application or use. Neither the supply of such information or purchase of product or service conveys any license, either express or implied, under patents or other intellectual property rights owned by Mitel or licensed from third parties by Mitel, whatsoever. Purchasers of products are also hereby notified that the use of product in certain ways or in combination with Mitel, or non-Mitel furnished goods or services may infringe patents or other intellectual property rights owned by Mitel.

This publication is issued to provide information only and (unless agreed by Mitel in writing) may not be used, applied or reproduced for any purpose nor form part of any order or contract nor to be regarded as a representation relating to the products or services concerned. The products, their specifications, services and other information appearing in this publication are subject to change by Mitel without notice. No warranty or guarantee express or implied is made regarding the capability, performance or suitability of any product or service. Information concerning possible methods of use is provided as a guide only and does not constitute any guarantee that such methods of use will be satisfactory in a specific piece of equipment. It is the user's responsibility to fully determine the performance and suitability of any equipment using such information and to ensure that any publication or data used is up to date and has not been superseded. Manufacturing does not necessarily include testing of all functions or parameters. These products are not suitable for use in any medical products whose failure to perform may result in significant injury or death to the user. All products and materials are sold and services provided subject to Mitel's conditions of sale which are available on request.

M Mitel (design) and ST-BUS are registered trademarks of MITEL Corporation
Mitel Semiconductor is an ISO 9001 Registered Company
Copyright 1999 MITEL Corporation
All Rights Reserved
Printed in CANADA

TECHNICAL DOCUMENTATION - NOT FOR RESALE