SP483E

Enhanced Low EMI Half-Duplex RS-485 Transceiver

- +5V Only
- Low Power BiCMOS
- Driver/Receiver Enable for Multi-Drop configurations
- Enhanced ESD Specifications:
  ±15KV Human Body Model
  ±15KV IEC1000-4-2 Air Discharge
  ±8KV IEC1000-4-2 Contact Discharge
- Low EMI Transceiver limited to 250kbps

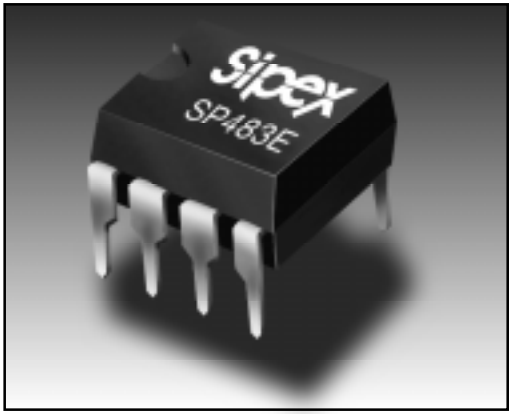

DESCRIPTION

The **SP483E** is a half-duplex transceiver that meets the specifications of RS-485 and RS-422 serial protocols with enhanced ESD performance. The ESD tolerance has been improved on this device to over ±15kV for both Human Body Model and IEC1000-4-2 Air Discharge Method. This device is pin-to-pin compatible with **Sipex's SP483** device as well as popular industry standards. As with the original version, the **SP483E** features **Sipex's** BiCMOS design allowing low power operation without sacrificing performance. The **SP483E** meet the requirements of the RS-485 and RS-422 protocols up to 250kbps under load. The **SP483E** is internally slew rate limited to reduce EMI and can meet the requirements of RS-485 and RS-422 up to 250kbps. The **SP483E** is also equipped with a low power Shutdown mode.

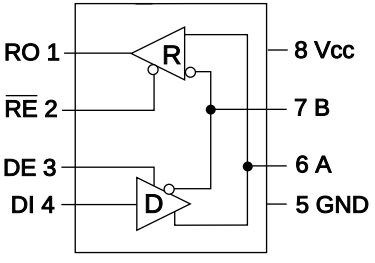

SP483E

 © Copyright 2000 Sipex Corporation

ABSOLUTE MAXIMUM RATINGS

These are stress ratings only and functional operation of the device at these ratings or any other above those indicated in the operation sections of the specifications below is not implied. Exposure to absolute maximum rating conditions for extended periods of time may affect reliability.

V_{CC}.....+7V

Input Voltages

- Logic.....-0.3V to (V_{CC}+0.5V)
- Drivers.....-0.3V to (V_{CC}+0.5V)
- Receivers..... ±15V

Output Voltages

- Logic.....-0.3V to (V_{CC}+0.5V)
- Drivers..... ±15V
- Receivers.....-0.3V to (V_{CC}+0.5V)

Storage Temperature.....-65°C to +150°C

Power Dissipation.....500mW

SPECIFICATIONS

T_{MIN} to T_{MAX} and V_{CC} = 5V ± 5% unless otherwise noted.

PARAMETERS	MIN.	TYP.	MAX.	UNITS	CONDITIONS
SP483E DRIVER					
DC Characteristics					
Differential Output Voltage	GND		V_{CC}	Volts	Unloaded; R = ∞ ; *see Figure 1*
Differential Output Voltage	2		V_{CC}	Volts	with load; R = 50Ω; (RS-422); *see Figure 1*
Differential Output Voltage	1.5		V_{CC}	Volts	with load; R = 27Ω; (RS-485); *see Figure 1*
Change in Magnitude of Driver Differential Output Voltage for Complimentary States			0.2	Volts	R = 27Ω or R = 50Ω; *see Figure 1*
Driver Common-Mode Output Voltage			3	Volts	R = 27Ω or R = 50Ω; *see Figure 1*
Input High Voltage	2.0			Volts	Applies to DE, DI, $\overline{RE}$
Input Low Voltage			0.8	Volts	Applies to DE, DI, $\overline{RE}$
Input Current					Applies to DE, DI, $\overline{RE}$
Driver Input			10µA		DI
Control Lines			1µA		DE, $\overline{RE}$
Driver Short-Circuit Current					
V_{OUT} = HIGH			±250	mA	-7V ≤ V_O ≤ +12V
V_{OUT} = LOW			±250	mA	-7V ≤ V_O ≤ +12V
SP483E DRIVER					
AC Characteristics					
Maximum Data Rate	250			Kbps	$\overline{RE}$ = 5V, DE = 5V; R_{DIFF} = 54Ω, C_{L1} = C_{L2} = 100pF
Driver Input to Output	250	800	2000	ns	t_{PLH}; R_{DIFF} = 54Ω, C_{L1} = C_{L2} = 100pF; *see Figures 3 and 5*
Driver Input to Output	250	800	2000	ns	t_{PHL}; R_{DIFF} = 54Ω, C_{L1} = C_{L2} = 100pF; *see Figures 3 and 5*
Driver Skew		100	800	ns	*see Figures 3 and 5,* t_{SKEW} = | t_{DPLH} - t_{DPHL} |
Driver Rise or Fall Time	250		2000	ns	From 10% to 90%; R_{DIFF} = 54Ω, C_{L1} = C_{L2} = 100pF; *see Figures 3 and 6*
Driver Enable to Output High	250		2000	ns	C_L = 100pF; *see Figures 4 & 6;* S_2 closed
Driver Enable to Output Low	250		2000	ns	C_L = 100pF; *see Figures 4 & 6;* S_1 closed
Driver Disable Time from Low	300		3000	ns	C_L = 15pF; *see Figures 2 & 8;* S_1 closed
Driver Disable Time from High	300		3000	ns	C_L = 15pF; *see Figures 2 & 8;* S_2 closed
SP481E/SP485E RECEIVER					
DC Characteristics					
Differential Input Threshold	-0.2		+0.2	Volts	-7V ≤ V_{CM} ≤ +12V
Input Hysteresis		20		mV	V_{CM} = 0V
Output Voltage High	3.5			Volts	I_O = -4mA, V_{ID} = +200mV
Output Voltage Low			0.4	Volts	I_O = +4mA, V_{ID} = -200mV
Three-State (High Impedance) Output Current			±1	µA	0.4V ≤ V_O ≤ 2.4V; $\overline{RE}$ = 5V
Input Resistance	12	15		kΩ	-7V ≤ V_{CM} ≤ +12V
Input Current (A, B); V_{IN} = 12V			+1.0	mA	DE = 0V, V_{CC} = 0V or 5.25V, V_{IN} = 12V
Input Current (A, B); V_{IN} = -7V			-0.8	mA	DE = 0V, V_{CC} = 0V or 5.25V, V_{IN} = -7V
Short-Circuit Current	7		95	mA	0V ≤ V_{CM} ≤ V_{CC}

 © Copyright 2000 Sipex Corporation

SPECIFICATIONS (continued)

T_{MIN} to T_{MAX} and V_{CC} = 5V ± 5% unless otherwise noted.

PARAMETERS	MIN.	TYP.	MAX.	UNITS	CONDITIONS
SP483E RECEIVER					
AC Characteristics					
Maximum Data Rate	250			Kbps	$\overline{RE}$ = 0V, DE = 0V
Receiver Input to Output	250		2000	ns	t_{PLH}; R_{DIFF} = 54Ω, C_{L1} = C_{L2} = 100pF; *Figures 3 & 7*
Receiver Input to Output	250		2000	ns	t_{PHL}; R_{DIFF} = 54Ω, C_{L1} = C_{L2} = 100pF; *Figures 3 & 7*
Diff. Receiver Skew $\lvert t_{PLH}-t_{PHL}\rvert$		100		ns	R_{DIFF} = 54Ω; C_{L1} = C_{L2} = 100pF; *Figures 3 & 7*
Receiver Enable to Output Low		45	70	ns	C_{RL} = 15pF; *Figures 2 & 8;* S_1 closed
Receiver Enable to Output High		45	70	ns	C_{RL} = 15pF; *Figures 2 & 8;* S_2 closed
Receiver Disable from Low		45	70	ns	C_{RL} = 15pF; *Figures 2 & 8;* S_1 closed
Receiver Disable from High		45	70	ns	C_{RL} = 15pF; *Figures 2 & 8;* S_2 closed
SP483E					
Shutdown Timing					
Time to Shutdown	50	200	600	ns	$\overline{RE}$ = 5V, DE = 0V
Driver Enable from Shutdown to Output High			2000	ns	C_L = 100pF; *See Figures 4 & 6;* S_2 closed
Driver Enable from Shutdown to Output Low			2000	ns	C_L = 100pF; *See Figures 4 & 6;* S_1 closed
Receiver Enable from Shutdown to Output High		300	2500	ns	C_L = 15pF; *See Figures 2 & 8;* S_2 closed
Receiver Enable from Shutdown to Output Low		300	2500	ns	C_L = 15pF; *See Figures 2 & 8;* S_1 closed
POWER REQUIREMENTS					
Supply Voltage	+4.75		+5.25	Volts	
Supply Current					
SP483E					
No Load		900		µA	$\overline{RE}$ = 0V, DI = 0V or V_{CC}; DE = V_{CC}
		600		µA	$\overline{RE}$ = 0V, DI = 0V or 5V; DE = 0V
SP483E					
Shutdown Mode			10	µA	DE = 0V, $\overline{RE}$=V_{CC}
ENVIRONMENTAL AND MECHANICAL					
Operating Temperature					
Commercial (_C_)	0		+70	°C	
Industrial (_E_)	-40		+85	°C	
Storage Temperature	-65		+150	°C	
Package					
Plastic DIP (_P)					
NSOIC (_N)					

 © Copyright 2000 Sipex Corporation

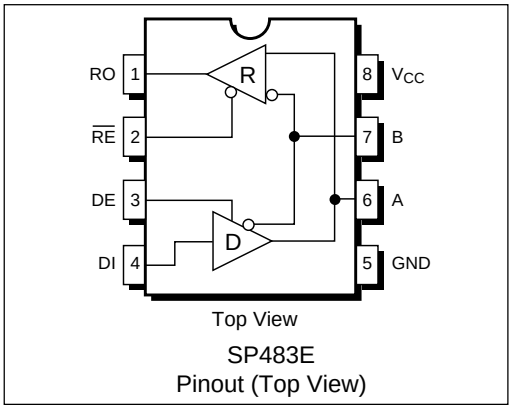

SP483E
Pinout (Top View)

PIN FUNCTION

Pin 1 – RO – Receiver Output.

Pin 2 – $\overline{RE}$ – Receiver Output Enable Active LOW.

Pin 3 – DE – Driver Output Enable Active HIGH.

Pin 4 – DI – Driver Input.

Pin 5 – GND – Ground Connection.

Pin 6 – A – Driver Output/Receiver Input Non-inverting.

Pin 7 – B – Driver Output/Receiver Input Inverting.

Pin 8 – Vcc – Positive Supply 4.75V<Vcc< 5.25V.

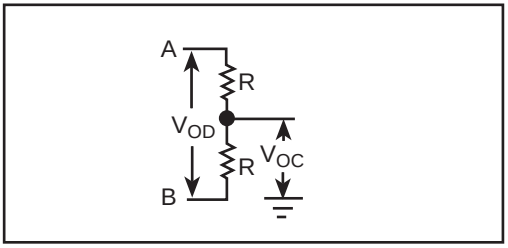

Figure 1. RS-485 Driver DC Test Load Circuit

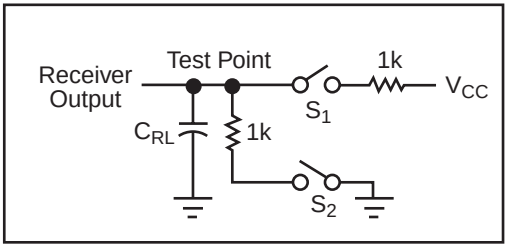

Figure 2. Receiver Timing Test Load Circuit

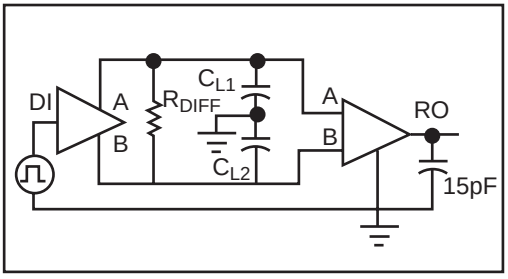

Figure 3. RS-485 Driver/Receiver Timing Test Circuit

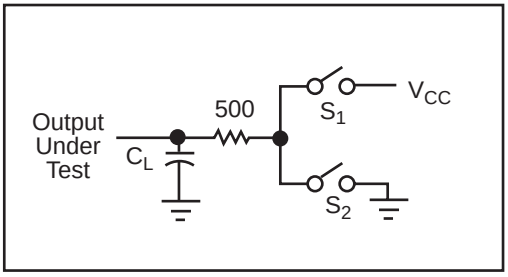

Figure 4. RS-485 Driver Timing Test Load #2 Circuit

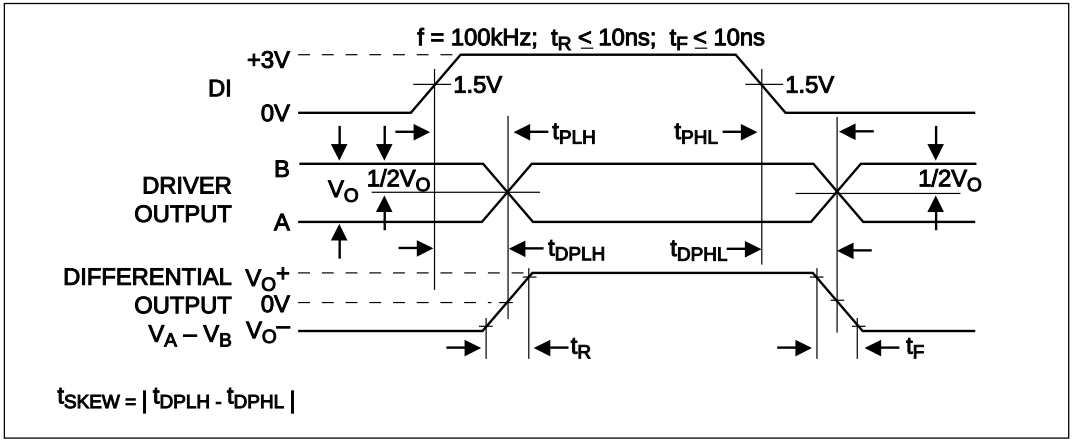

Figure 5. Driver Propagation Delays

 © Copyright 2000 Sipex Corporation

INPUTS				OUTPUTS	
$\overline{RE}$	DE	DI	LINE CONDITION	B	A
X	1	1	No Fault	0	1
X	1	0	No Fault	1	0
X	0	X	X	Z	Z
X	1	X	Fault	Z	Z

Table 1. Transmit Function Truth Table

INPUTS			OUTPUTS
$\overline{RE}$	DE	A - B	R
0	0	+0.2V	1
0	0	-0.2V	0
0	0	Inputs Open	1
1	0	X	Z

Table 2. Receive Function Truth Table

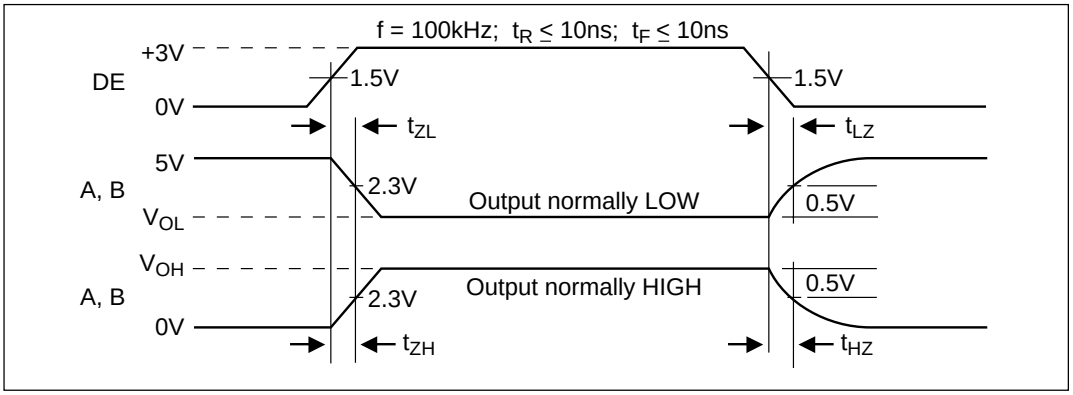

Figure 6. Driver Enable and Disable Times

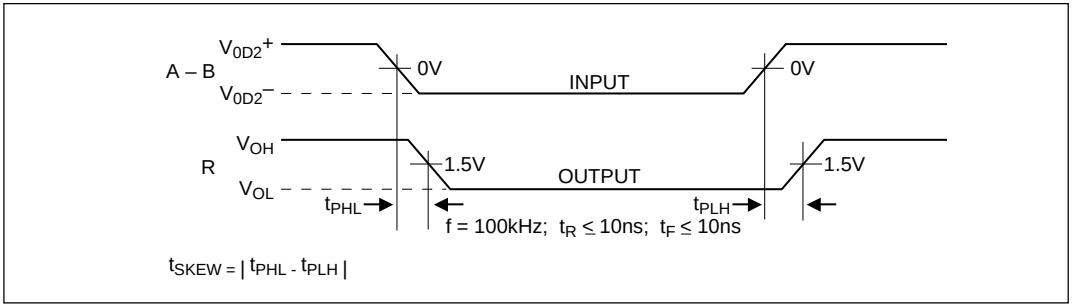

Figure 7. Receiver Propagation Delays

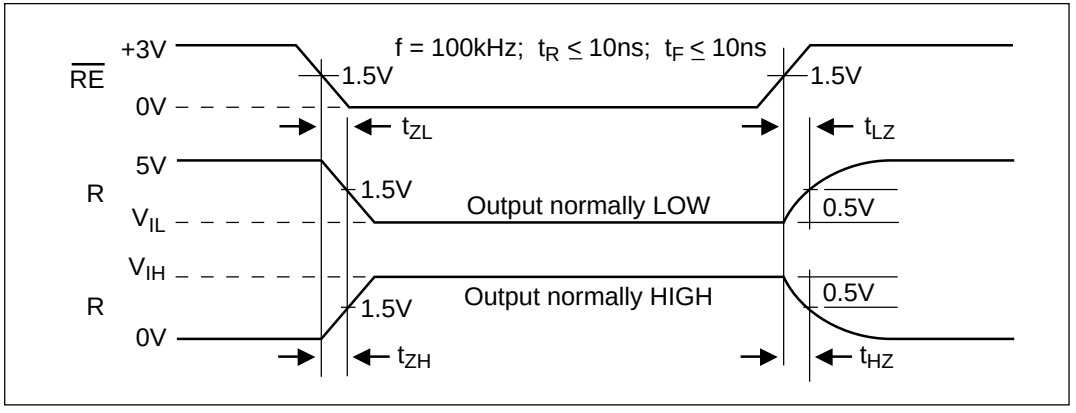

Figure 8. Receiver Enable and Disable Times

 © Copyright 2000 Sipex Corporation

DESCRIPTION...

The **SP483E** is a half-duplex differential transceiver that meets the requirements of RS-485 and RS-422. Fabricated with a Sipex proprietary BiCMOS process, the **SP483E** requires a fraction of the power of older bipolar designs.

The RS-485 standard is ideal for multi-drop applications and for long-distance interfaces. RS-485 allows up to 32 drivers and 32 receivers to be connected to a data bus, making it an ideal choice for multi-drop applications. Since the cabling can be as long as 4,000 feet, RS-485 transceivers are equipped with a wide (-7V to +12V) common mode range to accommodate ground potential differences. Because RS-485 is a differential interface, data is virtually immune to noise in the transmission line.

Drivers...

The driver outputs of the **SP483E** are differential outputs meeting the RS-485 and RS-422 standards. The typical voltage output swing with no load will be 0 Volts to +5 Volts. With worst case loading of 54Ω across the differential outputs, the drivers can maintain greater than 1.5V voltage levels. The drivers have an enable control line which is active HIGH. A logic HIGH on DE (pin 3) will enable the differential driver outputs. A logic LOW on DE (pin 3) will tri-state the driver outputs.

The **SP483E** has internally slew rate limited driver outputs to minimize EMI. The maximum data rate for the **SP483E** drivers is 250 Kbps under load.

Receivers...

The **SP483E** receivers have differential inputs with an input sensitivity as low as ±200mV. Input impedance of the receivers is typically 15kΩ (12kΩ minimum). A wide common mode range of -7V to +12V allows for large ground potential differences between systems. The receivers have a tri-state enable control pin. A logic LOW on $\overline{RE}$ (pin 2) will enable the receiver, a logic HIGH on $\overline{RE}$ (pin 2) will disable the receiver.

The **SP483E** receiver is rated for data rates up to 250 Kbps. The receivers are equipped with the fail-safe feature. Fail-safe guarantees that the receiver output will be in a HIGH state when the input is left unconnected.

Shutdown Mode...

The **SP483E** is equipped with a Shutdown mode. To enable the Shutdown state, both the driver and receiver must be disabled simultaneously. A logic LOW on DE (pin 3) and a logic HIGH on $\overline{RE}$ (pin 2) will put the **SP483E** into Shutdown mode. In Shutdown, supply current will drop to typically 1µA.

ESD TOLERANCE...

The **SP483E** device incorporates ruggedized ESD cells on all driver output and receiver input pins. The ESD structure is improved over our previous family for more rugged applications and environments sensitive to electro-static discharges and associated transients. The improved ESD tolerance is at least ±15kV without damage nor latch-up.

There are different methods of ESD testing applied:

a) MIL-STD-883, Method 3015.7
b) IEC1000-4-2 Air-Discharge
c) IEC1000-4-2 Direct Contact

 © Copyright 2000 Sipex Corporation

The Human Body Model has been the generally accepted ESD testing method for semiconductors. This method is also specified in MIL-STD-883, Method 3015.7 for ESD testing. The premise of this ESD test is to simulate the human body's potential to store electro-static energy and discharge it to an integrated circuit. The simulation is performed by using a test model as shown in *Figure 9*. This method will test the IC's capability to withstand an ESD transient during normal handling such as in manufacturing areas where the ICs tend to be handled frequently.

The IEC-1000-4-2, formerly IEC801-2, is generally used for testing ESD on equipment and systems. For system manufacturers, they must guarantee a certain amount of ESD protection since the system itself is exposed to the outside environment and human presence. The premise with IEC1000-4-2 is that the system is required to withstand an amount of static electricity when ESD is applied to points and surfaces of the equipment that are accessible to personnel during normal usage. The transceiver IC receives most of the ESD current when the ESD source is applied to the connector pins. The test circuit for IEC1000-4-2 is shown on *Figure 10*. There are two methods within IEC1000-4-2, the Air Discharge method and the Contact Discharge method.

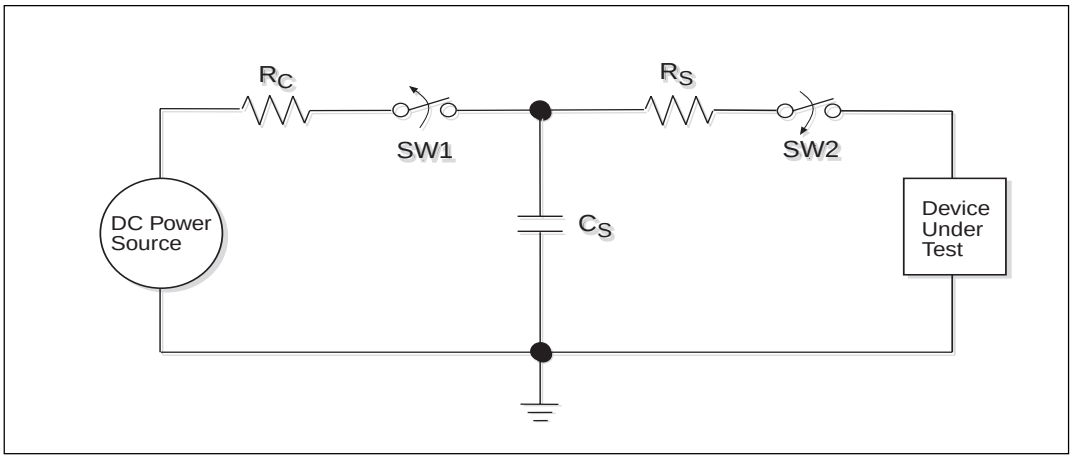

Figure 9. ESD Test Circuit for Human Body Model

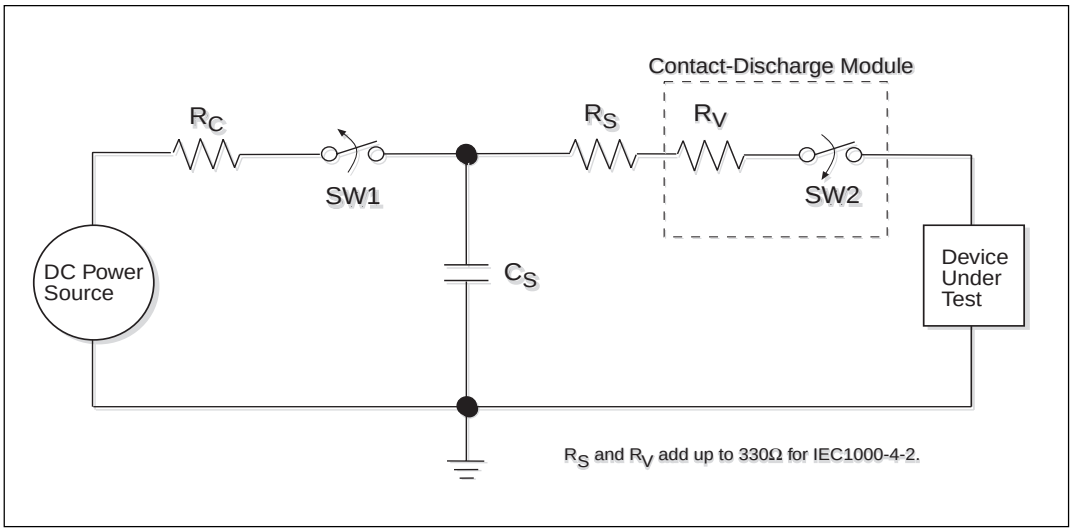

Figure 10. ESD Test Circuit for IEC1000-4-2

 © Copyright 2000 Sipex Corporation

With the Air Discharge Method, an ESD voltage is applied to the equipment under test (EUT) through air. This simulates an electrically charged person ready to connect a cable onto the rear of the system only to find an unpleasant zap just before the person touches the back panel. The high energy potential on the person discharges through an arcing path to the rear panel of the system before he or she even touches the system. This energy, whether discharged directly or through air, is predominantly a function of the discharge current rather than the discharge voltage. Variables with an air discharge such as approach speed of the object carrying the ESD potential to the system and humidity will tend to change the discharge current. For example, the rise time of the discharge current varies with the approach speed.

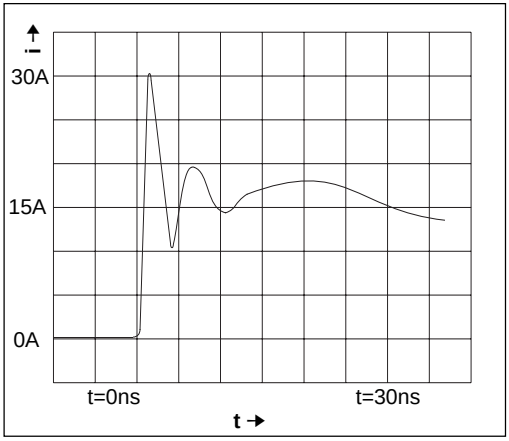

Figure 11. ESD Test Waveform for IEC1000-4-2

The Contact Discharge Method applies the ESD current directly to the EUT. This method was devised to reduce the unpredictability of the ESD arc. The discharge current rise time is constant since the energy is directly transferred without the air-gap arc. In situations such as hand held systems, the ESD charge can be directly discharged to the equipment from a person already holding the equipment. The current is transferred on to the keypad or the serial port of the equipment directly and then travels through the PCB and finally to the IC.

The circuit model in *Figures 9* and *10* represent the typical ESD testing circuit used for all three methods. The C_S is initially charged with the DC power supply when the first switch (SW1) is on. Now that the capacitor is charged, the second switch (SW2) is on while SW1 switches off. The voltage stored in the capacitor is then applied through R_S, the current limiting resistor, onto the device under test (DUT). In ESD tests, the SW2 switch is pulsed so that the device under test receives a duration of voltage.

For the Human Body Model, the current limiting resistor (R_S) and the source capacitor (C_S) are 1.5kΩ an 100pF, respectively. For IEC-1000-4-2, the current limiting resistor (R_S) and the source capacitor (C_S) are 330Ω an 150pF, respectively.

The higher C_S value and lower R_S value in the IEC1000-4-2 model are more stringent than the Human Body Model. The larger storage capacitor injects a higher voltage to the test point when SW2 is switched on. The lower current limiting resistor increases the current charge onto the test point.

DEVICE PIN TESTED	HUMAN BODY MODEL	IEC1000-4-2		
		Air Discharge	Direct Contact	Level
Driver Outputs	±15kV	±15kV	±8kV	4
Receiver Inputs	±15kV	±15kV	±8kV	4

Table 1. Transceiver ESD Tolerance Levels

 © Copyright 2000 Sipex Corporation

PACKAGE: PLASTIC DUAL–IN–LINE (NARROW)

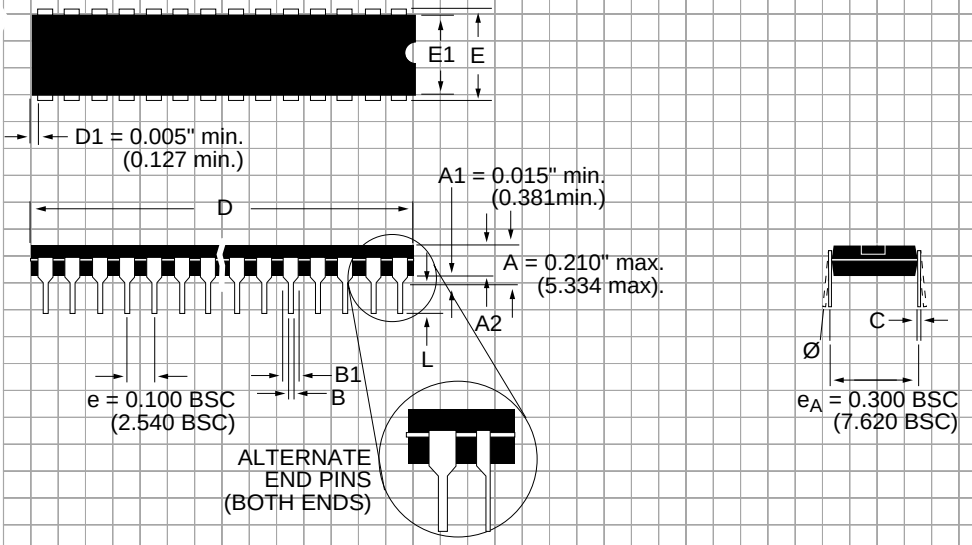

DIMENSIONS (Inches) Minimum/Maximum (mm)	8–PIN
A2	0.115/0.195 (2.921/4.953)
B	0.014/0.022 (0.356/0.559)
B1	0.045/0.070 (1.143/1.778)
C	0.008/0.014 (0.203/0.356)
D	0.355/0.400 (9.017/10.160)
E	0.300/0.325 (7.620/8.255)
E1	0.240/0.280 (6.096/7.112)
L	0.115/0.150 (2.921/3.810)
Ø	0°/ 15° (0°/15°)

 © Copyright 2000 Sipex Corporation

PACKAGE: PLASTIC SMALL OUTLINE (SOIC) (NARROW)

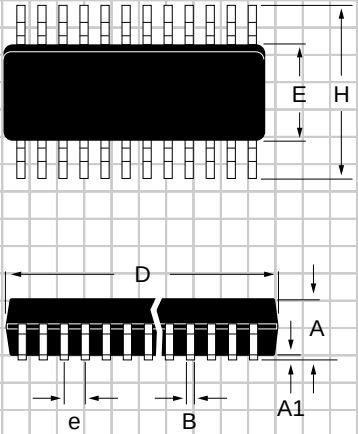

DIMENSIONS (Inches) Minimum/Maximum (mm)	8–PIN
A	0.053/0.069 (1.346/1.748)
A1	0.004/0.010 (0.102/0.249
B	0.014/0.019 (0.35/0.49)
D	0.189/0.197 (4.80/5.00)
E	0.150/0.157 (3.802/3.988)
e	0.050 BSC (1.270 BSC)
H	0.228/0.244 (5.801/6.198)
h	0.010/0.020 (0.254/0.498)
L	0.016/0.050 (0.406/1.270)
Ø	0°/8° (0°/8°)

 © Copyright 2000 Sipex Corporation

ORDERING INFORMATION

Model	Temperature Range	Package
SP483ECN	0˚C to +70˚C	8-pin Narrow SOIC
SP483ECP	0˚C to +70˚C	8-pin Plastic DIP
SP483EEN	-40˚C to +85˚C	8-pin Narrow SOIC
SP483EEP	-40˚C to +85˚C	8-pin Plastic DIP

Please consult the factory for pricing and availability on a Tape-On-Reel option.

Sipex Corporation

SIGNAL PROCESSING EXCELLENCE

Sipex Corporation

Headquarters and Sales Office
22 Linnell Circle
Billerica, MA 01821
TEL: (978) 667-8700
FAX: (978) 670-9001
e-mail: sales@sipex.com

Sales Office
233 South Hillview Drive
Milpitas, CA 95035
TEL: (408) 934-7500
FAX: (408) 935-7600

Sipex Corporation reserves the right to make changes to any products described herein. Sipex does not assume any liability arising out of the application or use of any product or circuit described hereing; neither does it convey any license under its patent rights nor the rights of others.