HF RoHS Pb GREEN SP3003 Lead-Free/Green Series

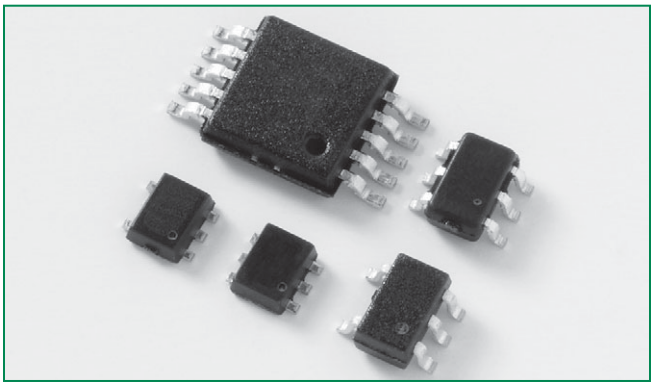

Description

The SP3003 has ultra low capacitance rail-to-rail diodes with an additional zener diode fabricated in a proprietary silicon avalanche technology to protect each I/O pin providing a high level of protection for electronic equipment that may experience destructive electrostatic discharges (ESD). These robust diodes can safely absorb repetitive ESD strikes at the maximum level specified in the IEC 61000-4-2 international standard (Level 4, ±8kV contact discharge) without performance degradation. Their very low loading capacitance also makes them ideal for protecting high speed signal pins such as HDMI, DVI, USB2.0, and IEEE 1394.

Pinout

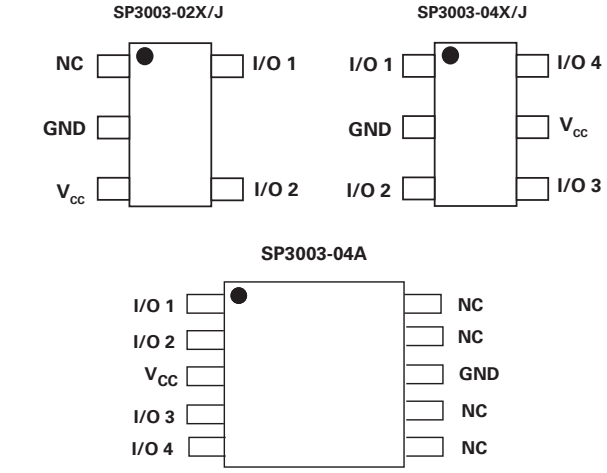

Features

- Low capacitance of 0.65pF (TYP) per I/O
- ESD protection of ±8kV contact discharge, ±15kV air discharge, (IEC61000-4-2)
- EFT protection, IEC61000-4-4, 40A (5/50ns)
- Low leakage current of 0.5µA (MAX) at 5V
- Small packages save board space (SC70, SOT553, SOT563, MSOP10)
- Lightning Protection, IEC61000-4-5, 2.5A (8/20µs)

Applications

- Computer Peripherals
- Mobile Phones
- PDA's
- Digital Cameras
- Network Hardware/Ports
- Test Equipment
- Medical Equipment

Functional Block Diagram

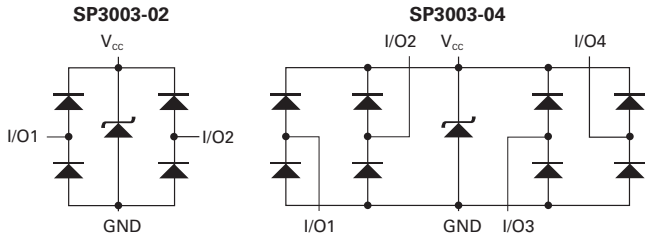

Life Support Note:

Not Intended for Use in Life Support or Life Saving Applications

The products shown herein are not designed for use in life sustaining or life saving applications unless otherwise expressly indicated.

©2010 Littelfuse, Inc.

Specifications are subject to change without notice.
Please refer to http://www.littelfuse.com for current information.

Absolute Maximum Ratings

Symbol	Parameter	Value	Units
I_{PP}	Peak Current (t_p=8/20µs)	2.5	A
T_{OP}	Operating Temperature	-40 to 85	°C
T_{STOR}	Storage Temperature	-50 to 150	°C

CAUTION: Stresses above those listed in "Absolute Maximum Ratings" may cause permanent damage to the device. This is a stress only rating and operation of the device at these or any other conditions above those indicated in the operational sections of this specification is not implied.

Thermal Information

Parameter	Rating	Units
Storage Temperature Range	-65 to 150	°C
Maximum Junction Temperature	150	°C
Maximum Lead Temperature (Soldering 10s)	260	°C

Electrical Characteristics (T_{OP}=25°C)

Parameter	Symbol	Test Conditions	Min	Typ	Max	Units
Reverse Standoff Voltage	V_{RWM}	$I_R \leq 1\mu A$			6	V
Reverse Leakage Current	I_{LEAK}	V_R=5V			0.5	µA
Clamp Voltage[1]	V_C	I_{PP}=1A, t_p=8/20µs, Fwd		10.0	12.0	V
		I_{PP}=2A, t_p=8/20µs, Fwd		11.8	15.0	V
ESD Withstand Voltage[1]	V_{ESD}	IEC61000-4-2 (Contact)	±8			kV
		IEC61000-4-2 (Air)	±15			kV
Diode Capacitance[1]	$C_{I/O-GND}$	Reverse Bias=0V	0.7	0.8	0.95	pF
		Reverse Bias=1.65V	0.55	0.65	0.8	pF
Diode Capacitance[1]	$C_{I/O-I/O}$	Reverse Bias=0V		0.35		pF

Note 1: Parameter is guaranteed by design and/or device characterization.

©2010 Littelfuse, Inc.
Specifications are subject to change without notice.
Please refer to http://www.littelfuse.com for current information.

Insertion Loss (S21) I/O to GND

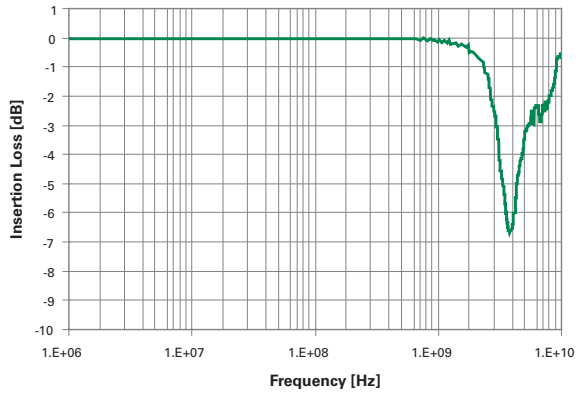

Capacitance vs. Bias Voltage

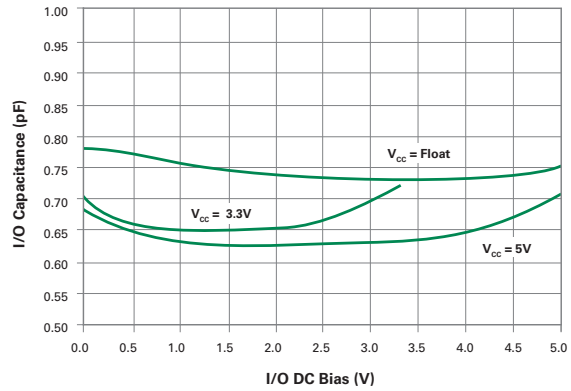

Capacitance vs. Frequency

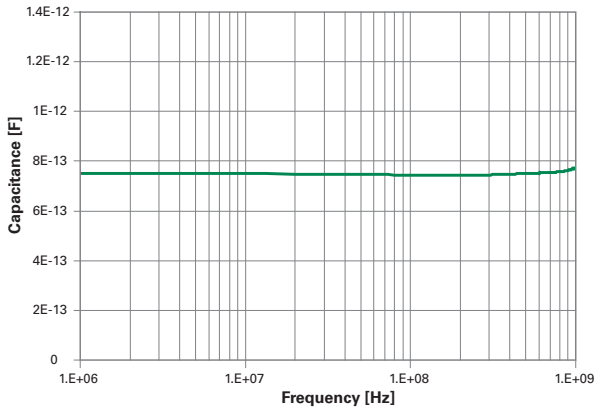

Lead-Free/Green SP3003

©2010 Littelfuse, Inc.
Specifications are subject to change without notice.
Please refer to http://www.littelfuse.com for current information.

Application Example

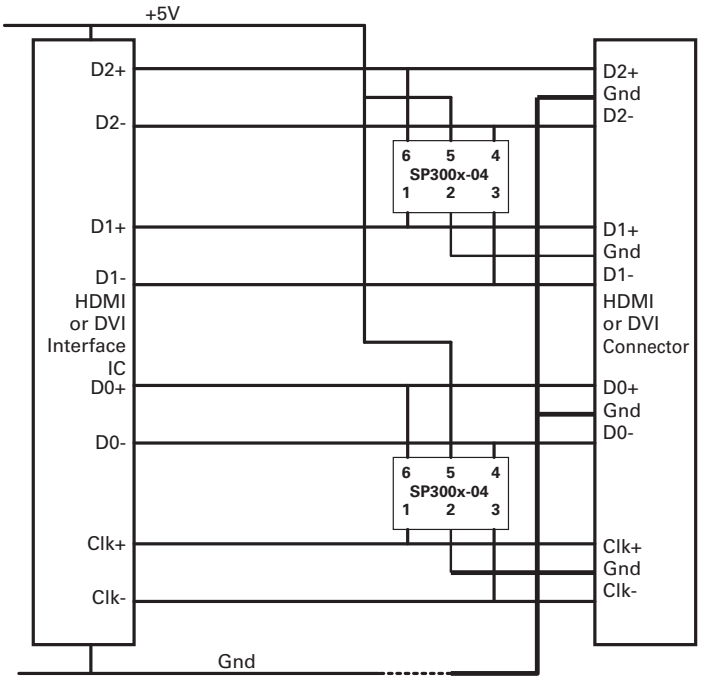

HDMI or DVI application example for the Littelfuse SP300x-04 protection devices. A single 4 channel SP300x-04 device can be used to protect four of the data lines in a HDMI/DVI interface. Two (2) SP300x-04 devices provide protection for the main data lines. Low voltage ASIC HDMI/DVI drivers can also be protected with the SP300x-04, the $+V_{CC}$ pins on the SP300x-04 can be substituted with a suitable bypass capacitor or in some backdrive applications the $+V_{CC}$ of the SP300x-04 can be floated or NC.

Soldering Parameters

Reflow Condition		Pb – Free assembly
Pre Heat	-Temperature Min ($T_{s(min)}$)	150°C
	-Temperature Max ($T_{s(max)}$)	200°C
	-Time (min to max) (t_s)	60 – 180 secs
Average ramp up rate (Liquidus) Temp (T_L) to peak		3°C/second max
$T_{S(max)}$ to T_L - Ramp-up Rate		3°C/second max
Reflow	-Temperature (T_L) (Liquidus)	217°C
	-Temperature (t_L)	60 – 150 seconds
Peak Temperature (T_P)		$250^{+0/-5}$ °C
Time within 5°C of actual peak Temperature (t_p)		20 – 40 seconds
Ramp-down Rate		6°C/second max
Time 25°C to peak Temperature (T_P)		8 minutes Max.
Do not exceed		260°C

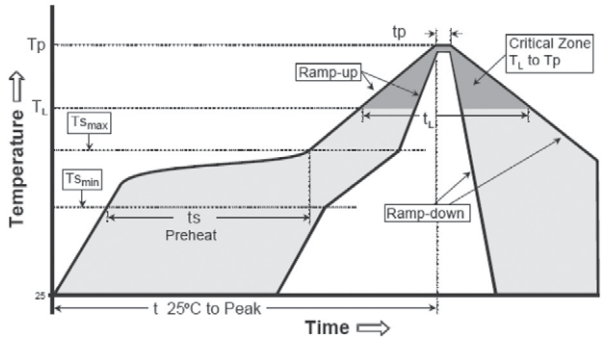

©2010 Littelfuse, Inc.
Specifications are subject to change without notice.
Please refer to http://www.littelfuse.com for current information.

Package Dimensions — SC70-5

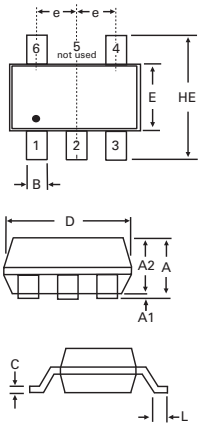

Solder Pad Layout

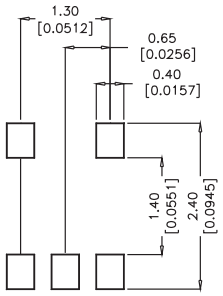

Package	SC70-5			
Pins	5			
JEDEC	MO-203 Issue A			
	Millimeters		Inches	
	Min	Max	Min	Max
A	0.80	1.10	0.031	0.043
A1	0.00	0.10	0.000	0.004
A2	0.70	1.00	0.028	0.039
B	0.15	0.30	0.006	0.012
c	0.08	0.25	0.003	0.010
D	1.85	2.25	0.073	0.089
E	1.15	1.35	0.045	0.053
e	0.65 BSC		0.026 BSC	
HE	2.00	2.40	0.079	0.094
L	0.26	0.46	0.010	0.018

Package Dimensions — SC70-6

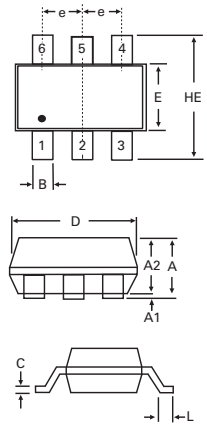

Solder Pad Layout

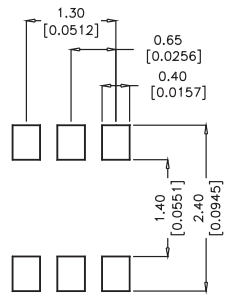

Package	SC70-6			
Pins	6			
JEDEC	MO-203 Issue A			
	Millimeters		Inches	
	Min	Max	Min	Max
A	0.80	1.10	0.031	0.043
A1	0.00	0.10	0.000	0.004
A2	0.70	1.00	0.028	0.039
B	0.15	0.30	0.006	0.012
c	0.08	0.25	0.003	0.010
D	1.85	2.25	0.073	0.089
E	1.15	1.35	0.045	0.053
e	0.65 BSC		0.026 BSC	
HE	2.00	2.40	0.079	0.094
L	0.26	0.46	0.010	0.018

Package Dimensions — SOT553

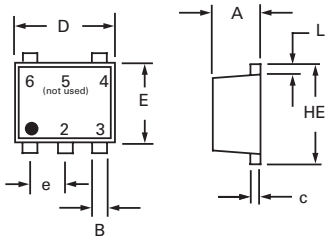

Solder Pad Layout

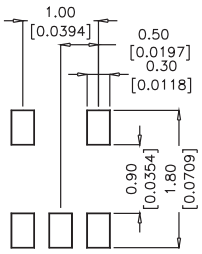

Package	SOT 553			
Pins	5			
	Millimeters		Inches	
	Min	Max	Min	Max
A	0.50	0.60	0.020	0.024
B	0.17	0.27	0.007	0.011
c	0.08	0.18	0.003	0.007
D	1.50	1.70	0.059	0.067
E	1.10	1.30	0.043	0.051
e	0.50 BSC		0.020 BSC	
L	0.10	0.30	0.004	0.012
HE	1.50	1.70	0.059	0.067

©2010 Littelfuse, Inc.
Specifications are subject to change without notice.
Please refer to http://www.littelfuse.com for current information.

Package Dimensions — SOT563

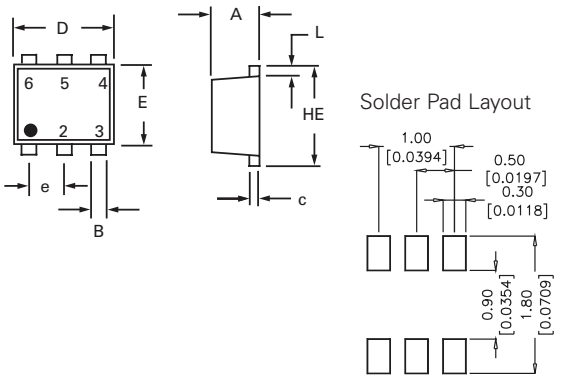

Package	SOT 563			
Pins	6			
	Millimeters		Inches	
	Min	Max	Min	Max
A	0.50	0.60	0.020	0.024
B	0.17	0.27	0.007	0.011
c	0.08	0.18	0.003	0.007
D	1.50	1.70	0.059	0.067
E	1.10	1.30	0.043	0.051
e	0.50 BSC		0.020 BSC	
L	0.10	0.30	0.004	0.012
HE	1.50	1.70	0.059	0.067

Package Dimensions — MSOP10

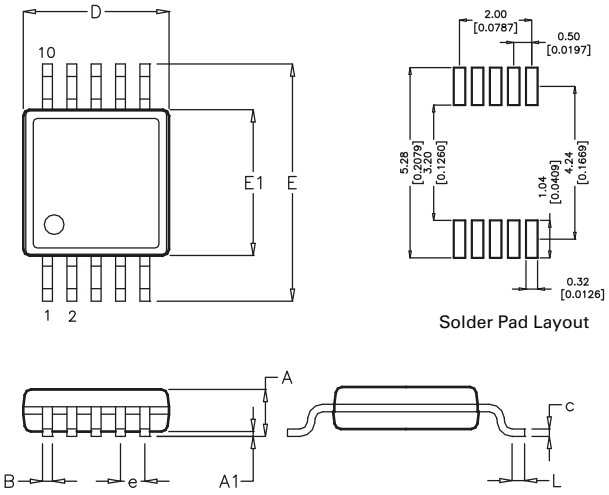

Package	MSOP10			
Pins	10			
	Millimeters		Inches	
	Min	Max	Min	Max
A	-	1.10	-	0.043
A1	0.00	0.15	0.000	0.006
B	0.17	0.27	0.007	0.011
c	0.08	0.23	0.003	0.009
D	2.90	3.10	0.114	0.122
E	4.67	5.10	0.184	0.200
E1	2.90	3.10	0.114	0.122
e	0.50 BSC		0.020 BSC	
HE	0.40	0.80	0.016	0.031

Part Numbering System

SP3003-04XTG

- Silicon Protection Array
- Series
- Number of Channels
  - -02 = 2 channel (SC70-5, SOT553 packages)
  - -04 = 4 channel (SC70-6, SOT563, MSOP-10 packages)
- Package
  - A = MSOP-10, 3000 quantity
  - J = SC70-5 or SC70-6, 3000 quantity
  - X = SOT553 or SOT563, 5000 quantity
- T= Tape & Reel
- G= Green

Part Marking System

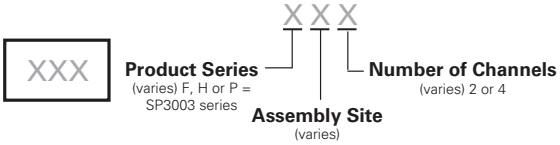

Product Characteristics

Lead Plating	Matte Tin (SC70-x, MSOP-10), Pre-Plated Frame (SOT5x3)
Lead Material	Copper Alloy
Lead Coplanarity	0.0004 inches (0.102mm)
Subsitute Material	Silicon
Body Material	Molded Epoxy
Flammability	UL94-V-0

Notes :

1. All dimensions are in millimeters
2. Dimensions include solder plating.
3. Dimensions are exclusive of mold flash & metal burr.
4. All specifications comply to JEDEC SPEC MO-223 Issue A
5. Blo is facing up for mold and facing down for trim/form, i.e. reverse trim/form.
6. Package surface matte finish VDI 11-13.

©2010 Littelfuse, Inc.
Specifications are subject to change without notice.
Please refer to http://www.littelfuse.com for current information.

Ordering Information

Part Number	Package	Marking	Min. Order Qty.
SP3003-02JTG	SC70-5	FX2	3000
SP3003-02XTG	SOT553	FX2	5000
SP3003-04ATG	MSOP-10	FX4	4000
SP3003-04JTG	SC70-6	FX4	3000
SP3003-04XTG	SOT563	FX4	5000

Embossed Carrier Tape & Reel Specifications - SC70-5 and SC70-6

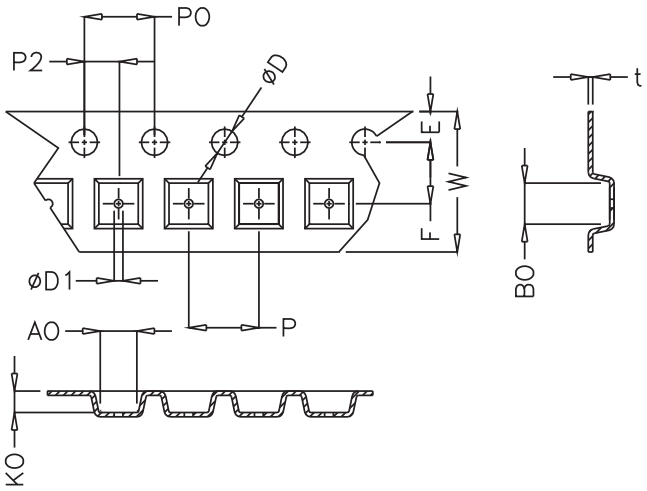

	Millimetres		Inches	
	Min	Max	Min	Max
E	1.65	1.85	0.064	0.073
F	3.45	3.55	0.135	0.139
P2	1.95	2.05	0.077	0.081
D	1.40	1.60	0.055	0.063
D1	1.00	1.25	0.039	0.049
P0	3.90	4.10	0.154	0.161
10P0	40.0+/- 0.20		1.574+/-0.008	
W	7.70	8.10	0.303	0.318
P	3.90	4.10	0.153	0.161
A0	2.14	2.34	0.084	0.092
B0	2.24	2.44	0.088	0.960
K0	1.12	1.32	0.044	0.052
t	0.27 max		0.010 max	

Embossed Carrier Tape & Reel Specifications - SOT553 and SOT563

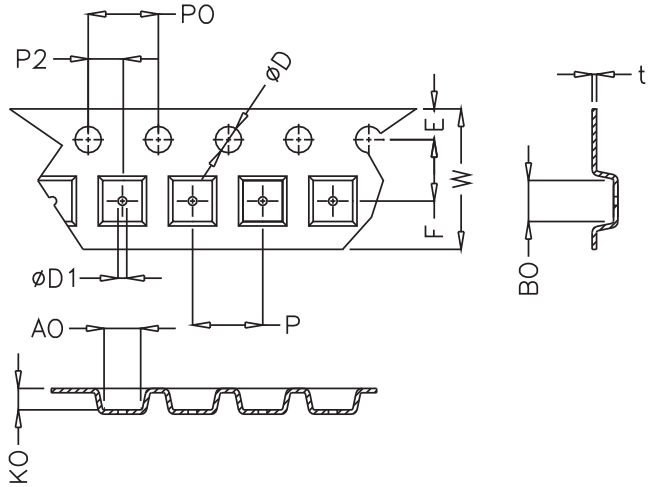

	Millimetres		Inches	
	Min	Max	Min	Max
E	1.65	1.85	0.064	0.073
F	3.45	3.55	0.135	0.139
P2	1.95	2.05	0.076	0.081
D	1.40	1.60	0.055	0.063
D1	0.45	0.55	0.017	0.021
P0	3.90	4.10	0.154	0.161
10P0	40.0+/- 0.20		1.574+/-0.008	
W	7.70	8.10	0.303	0.318
P	3.90	4.10	0.153	0.161
A0	1.73	1.83	0.068	0.072
B0	1.73	1.83	0.068	0.072
K0	0.64	0.74	0.025	0.029
t	0.22 max		0.009 max	

©2010 Littelfuse, Inc.
Specifications are subject to change without notice.
Please refer to http://www.littelfuse.com for current information.

Embossed Carrier Tape & Reel Specification - MSOP-10

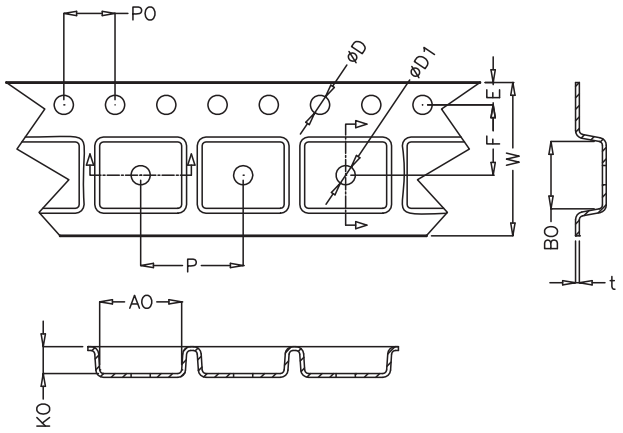

	Millimetres		Inches	
	Min	Max	Min	Max
E	1.65	1.85	0.065	0.073
F	5.40	5.60	0.213	0.220
D	1.50	1.60	0.059	0.063
D1	1.50 Min		0.059 Min	
P0	3.90	4.10	0.154	0.161
10P0	40.0+/- 0.20		1.574+/-0.008	
W	11.90	12.10	0.469	0.476
P	7.90	8.10	0.311	0.319
A0	5.20	5.40	0.205	0.213
B0	3.20	3.40	0.126	0.134
K0	1.20	1.40	0.047	0.055
t	0.30 +/- 0.05		0.012+/- 0.002	

©2010 Littelfuse, Inc.
Specifications are subject to change without notice.
Please refer to http://www.littelfuse.com for current information.