+3.0V to +5.5V USB Power Control Switch

- Compliant to USB Specifications
- +3.0V to +5.5V Input Voltage Range
- Two Independent Power Switches
- Two Error Flag Outputs, Open Drain
- 2.7V Undervoltage Lockout
- 500mA Minimum Continuous Load Current Per Switch
- 1.25A Short Circuit Current Limit
- 140mΩ Maximum On-Resistance
- 80µA On-State Supply Current
- 1µA Shutdown Current
- Output Can Be Forced Higher Than Input (Off-State)
- Thermal Shutdown
- 1ms Soft-Start Power Up
- Active-High Version: SP2526-1
- Active-Low Version: SP2526-2

DESCRIPTION

The SP2526 device is a dual +3.0V to +5.5V USB Supervisory Power Control Switch ideal for self-powered and bus-powered Universal Serial Bus (USB) applications. Each switch has low on-resistance (80mΩ typical) and can supply 500mA minimum. The fault currents are limited to 2.0A typical and the flag output pin for each switch is available to indicate fault conditions to the USB controller. The 1ms soft start will eliminate any momentary voltage droop on the upstream port that may occur when the switch is enabled in bus-powered applications. The thermal shutdown feature will prevent damage to the device when subjected to excessive current loads. The undervoltage lockout feature will ensure that the device will remain off unless there is a valid input voltage present.

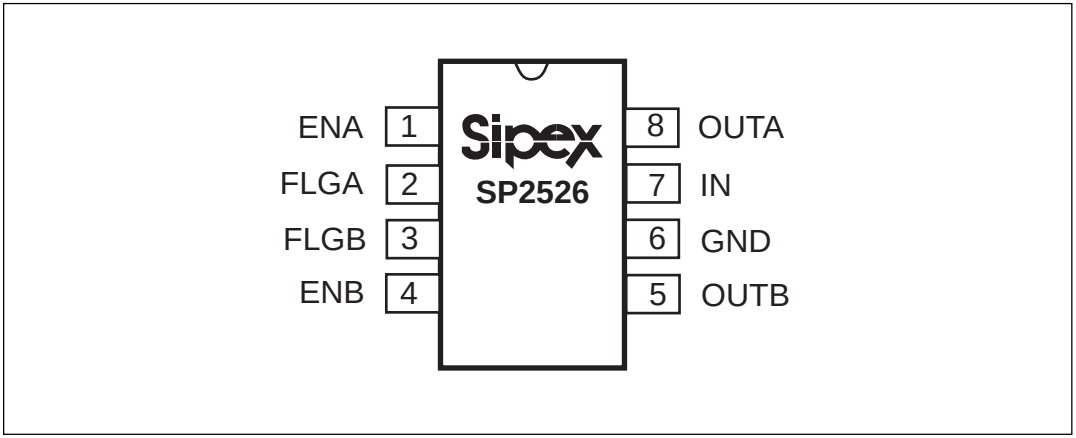

 © Copyright 2001 Sipex Corporation

ABSOLUTE MAXIMUM RATINGS

These are stress ratings only and functional operation of the device at these ratings or any other above those indicated in the operation sections of the specifications below is not implied. Exposure to absolute maximum rating conditions for extended periods of time may affect reliability.

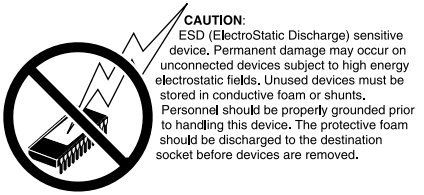

Supply Voltage.....-0.3V, +6.0V
Operating Temperature.....-40˚C to +85˚C
Storage Temperature.....-65˚C to +150˚C

Power Dissipation Per Package
8-pin NSOIC
(derate 6.14mW/^{O}C above+70°C).....500mW
8-pin PDIP
(derate 11.8mW/^{O}C above+70°C).....1000mW

SPECIFICATIONS

Unless otherwise noted, the following specifications apply for V_{IN} = +5.0V, T_A = 25˚C.

PARAMETER	MIN.	TYP.	MAX.	UNITS	CONDITIONS
Operating Voltage Range, V_{IN}	3.0		5.5	V	
Supply Current, I_{IN}		0.05 80	5.0 160	µA	enable off, no output load enable on, no output load
Enable Input Threshold Voltage	 0.8	2.1 1.9	2.4	V	low to high transition high to low transition
Enable Input Current		0.01 0.01	1 1	µA	V_{EN} = $V_{OH(min)}$ = 2.4V V_{EN} = $V_{OL(max)}$ = 0.8V
Enable Input Capacitance		1		pF	
Switch Resistance		80	140	mΩ	3.3V≤V_{IN}≤5.0V,I_L≤500mA
Output Turn-On Delay		0.5		ms	R_L=10Ω each output
Output Turn-On Rise Time		1		ms	R_L=10Ω each output
Output Turn-Off Delay		1	20	µs	R_L=10Ω each output
Output Turn-Off Fall Time		1	20	µs	R_L=10Ω each output
Output Leakage Current		.02	10	µA	each output
Current Limit Threshold		2.0	2.8	A	each output, Ramped load applied to enable output
Short-Circuit Current Limit	0.5	0.75	1.25	A	each output, V_{OUT} = 0V
Over-Temperature Shutdown Threshold		135 125		^{O}C	increasing temperature decreasing temperature
Error Flag Output Resistance		10 15	25 40	Ω	V_{IN} = 5V,I_L = 10mA V_{IN} = 3.3V,I_L = 10mA
Error Flag Off Current		0.01	1	µA	V_{FLAG} = 5V
UVLO Threshold	 2.5	2.7 2.6	3.0	V	V_{IN} increasing, T_{MIN} to T_{MAX}, V_{IN} decreasing, T_{MIN} to T_{MAX}

© Copyright 2001 Sipex Corporation

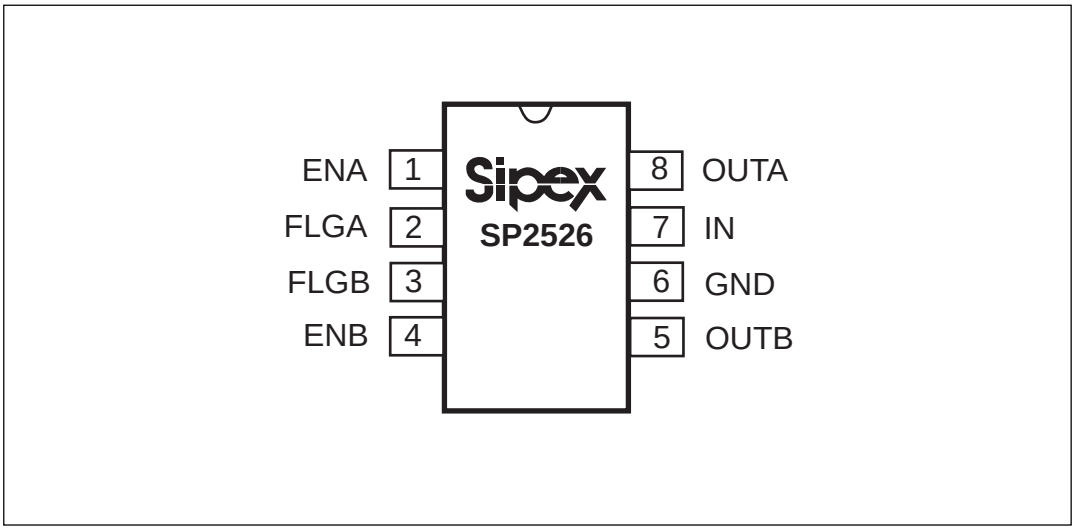

PIN ASSIGNMENTS

Pin 1 — ENA — Enable Input for MOSFET Switch A. This input pin is active high for the SP2526-1 and active low for the SP2526-2.

Pin 2 — FLGA — Fault Flag Output for Switch Channel A. This open drain output pin pulls low to indicate overcurrent, undervoltage lockout, and thermal shutdown conditions.

Pin 3 — FLGB — Fault Flag Output for Switch Channel B. This open drain output pin pulls low to indicate overcurrent, undervoltage lockout, and thermal shutdown conditions.

Pin 4 — ENB — Enable Input for MOSFET Switch B. This input pin is active high for the SP2526-1 and active low for the SP2526-2.

Pin 5 — OUTA — Output for MOSFET Switch Channel A. This is the output pin of the MOSFET source of channel A, typically connected to the switched side of the load.

Pin 6 — GND — Ground reference. Supply return.

Pin 7 — IN — Supply Input. This input pin is connected to the MOSFET drain of both switches. Connect +3.0V to +5.5V to this input pin. The voltage at this input pin also supplies the internal circuitry.

Pin 8 — OUTB — Output for MOSFET Switch Channel B. This is the output pin of the MOSFET source of channel B, typically connected to the switched side of the load.

.

 © Copyright 2001 Sipex Corporation

FEATURES

Features of the SP2526 device include current limiting, a +2.7V undervoltage lockout, overtemperature shutdown, error flag output, soft start, a switch-on resistance of 100mΩ over the entire supply range, and a supply current of 100µA. The SP2526-1 device has an active-high enable. The SP2526-2 device has an active-low enable.

THEORY OF OPERATION

The SP2526 is a dual integrated high-side power switch optimized for self-powered and bus-powered Universal Serial Bus (USB) applications. There are operational conditions that will enable or disable one or more of the output MOSFET switches, depending on the type of hazard. Certain conditions will activate the open-drain error flag transistors forcing the flag outputs to ground. The SP2526 provides the following functions:

1) Independent Solid State Switches: Independent MOSFET switches connect the IN pin to the OUTA and OUTB pins when enabled by logic signals at the ENA and ENB control pins.

2) Fault Flag Conditions: Both the FLGA and FLGB pins are N-channel, open-drain MOSFET outputs capable of sinking a 10mA load to typically 100mV above ground.

3) Undervoltage Lockout: The lockout mechanism monitors the input voltage and will enable the MOSFET switches only when the voltage at the V_{IN} pin is greater than +2.7V.

4) Current Limiting Threshold: A current limiting threshold prevents damage to the device and external load.

5) Thermal Shutdown: This mechanism protects the SP2526 and signals a fault condition if the die temperature exceeds 135°C (typical). This function has 10°C of hysteresis that prevents the MOSFET switches from turning on until the die temperature drops to 125°C (typical).

Input and Output

The independent solid state MOSFET switches connect the USB +5.0V supply voltage at the IN pin to the OUTA and OUTB pins when enabled by logic signals at ENA and ENB. The IN pin is the power supply connection to the device and the drain of the output MOSFET switches.

Typically, the current will flow through the switches from IN to OUTA and OUTB towards the load. If V_{OUT} is greater than V_{IN} when a switch is enabled, the current will flow from OUTA or OUTB to the IN pin because the MOSFET channels are bidirectional when switched on.

Under normal operating condition, the MOSFET switches will present 100mΩ maximum resistance when closed. The output MOSFETs and driver circuitry are designed to allow the MOSFET source to be externally forced to a higher voltage than the drain when the switch is off.

Fault Flag Conditions

Fault conditions disable one or both MOSFET switches, depending on the type of fault. FLGA and FLGB are N-channel, open-drain MOSFET outputs. The active low fault flag occurs when one of the following conditions exist:

1. Undervoltage
2. Overcurrent
3. Overtemperature

Undervoltage Lockout

This voltage lockout mechanism prevents the MOSFET switches from turning on until V_{IN} is greater than +2.7V.

After the switch turns on, if the voltage at V_{IN} drops below +2.6V, the lockout circuitry shuts off both switches and signals the FLGA and FLGB fault flags. In the undervoltage lockout state, the FLGA and FLGB pins will be asserted. This detection functions only when at least one MOSFET switch is enabled.

Output Current Limiting

The SP2526 has a preset current-limit threshold. These switch control circuits will implement current limiting which prevents damage to the SP2526 and the external load while allowing a

 © Copyright 2001 Sipex Corporation

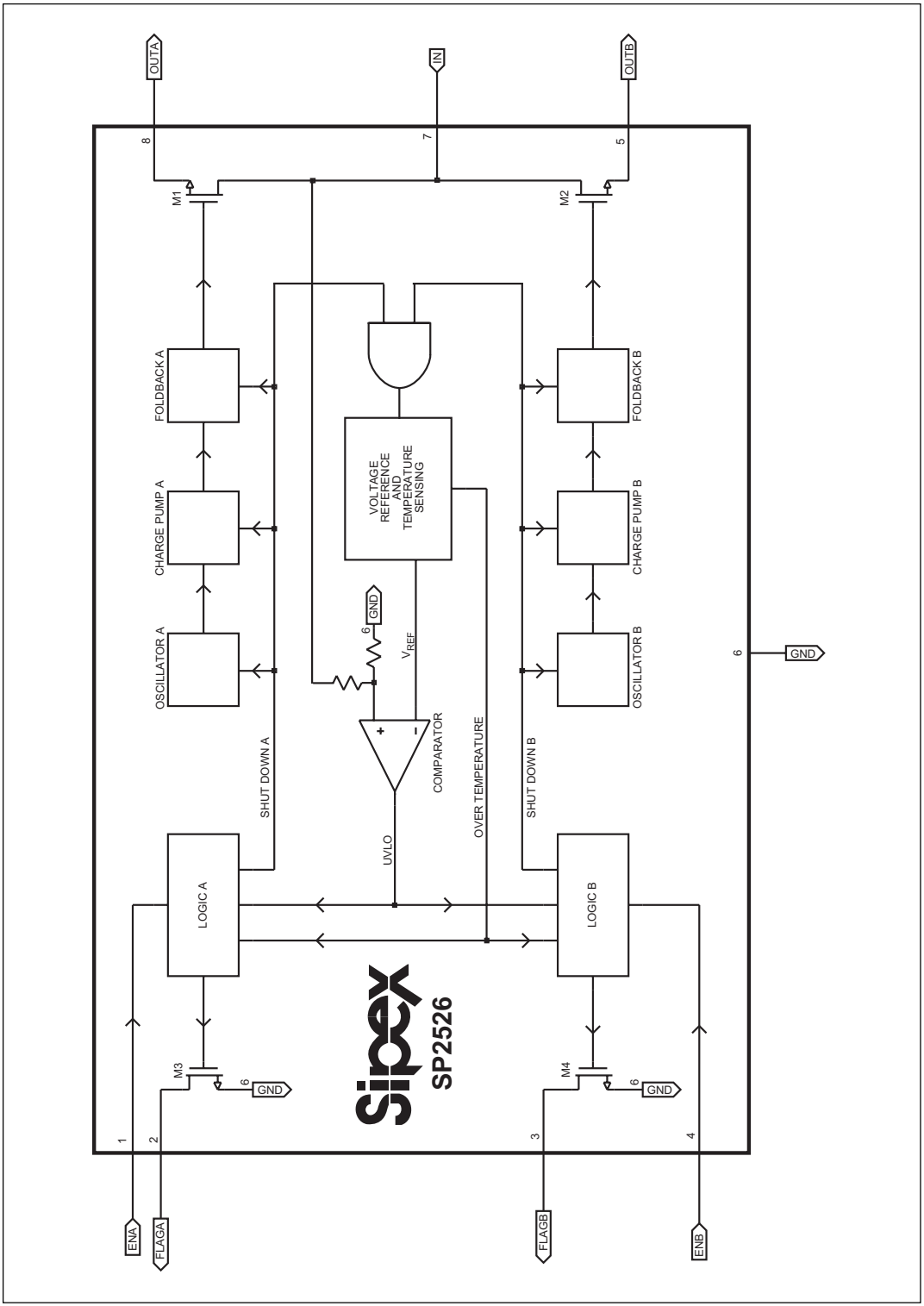

Figure 1. Internal Block Diagram for the SP2526

 © Copyright 2001 Sipex Corporation

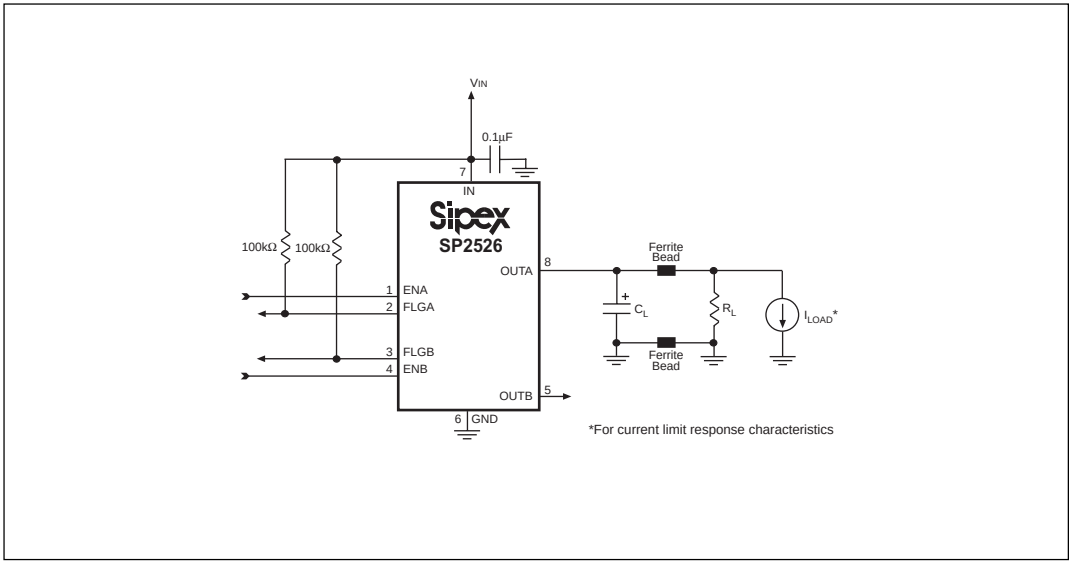

Figure 2. Test Circuit for the SP2526

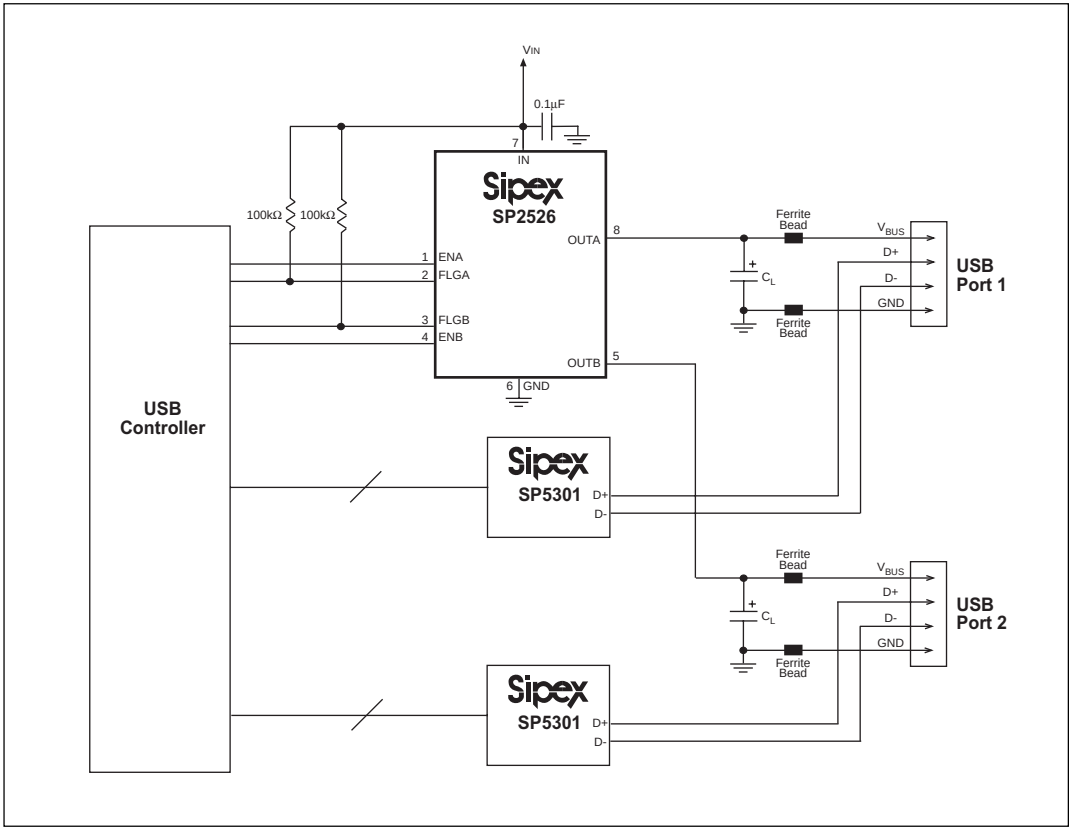

Figure 3. Typical Application Circuit for the SP2526

 © Copyright 2001 Sipex Corporation

minimum current of 0.5A to be delivered.

The SP2526 MOSFET switches will exhibit very low resistance (≤100mΩ) or voltage drop until the current limit is reached. The fold back current is the current that is delivered into a short circuit at the output.

If the SP2526 MOSFET switch is enabled into a heavy load or short-circuit, the switch will immediately go into a constant-current mode, reducing the output voltage. The respective fault flag will pull low until the condition is removed.

When a heavy load is connected to the SP2526 switch output, a large transient current may flow until the current limiting circuitry responds.

The SP2526 will provide a low resistance switch (100mΩ) between the input and output pins. This low resistance will be maintained with increasing current until the 2.2A limit is reached. If load current exceeds this limit, the switch will increase its resistance. The foldback current (500mA minimum) is reached when there is a short applied to the output. The 100mΩ switch resistance is guaranteed for all load currents, increasing or decreasing, that are below 500mA.

Thermal Shutdown

Under nominal load conditions, the switch resistance is very low and internal power dissipation is low. Under short circuit conditions, current is limited and internal power dissipation is higher but not extreme. Under intermediate load conditions, both the voltage across the switch and the current through the switch are at intermediate values and internal power dissipation is highest. In this last condition, the die temperature will reach the thermal limit and the switches in both channels will be shut off. As the die subsequently cools, the switch will turn on again. If the load is not removed, the device will thermal cycle in this manner to protect itself from damage.

Thermal shutdown is asserted if the die temperature exceeds 135°C and will not release until the die termperature drops below 125°C. Thermal shutdown will disable both output MOSFET switches and force both FLGA and FLGB fault flags low.

The delay between a current limit fault and thermal shutdown will vary with ambient temperature, board layout, and load impedance, but is typically several hundred milliseconds. A designer
can command a USB controller to recognize the fault and disable the appropriate channel within this time.

TYPICAL APPLICATIONS

Bypass Capacitors

A 0.1µF to 1.0µF bypass capacitor from the IN pin to the GND pin is recommended to control power supply transients. Refer to *Figure 4*. Without a bypass capacitor, an output short may cause sufficient ringing and damage the device. Without a bypass capacitor, excessive supply lead inductance is also a concern.

Input or output transients must not exceed the absolute maximum supply voltage of $V_{IN(MAX)}$ = +6.0V even for a short duration to avoid risk of damage to the device.

Transient Overcurrent Filter

When the SP2526 is enabled, large values of capacitance at the output of the device will cause inrush current to exceed the short circuit current-limit threshold of the device and assert a flag fault condition for FLGA and/or FLGB. The duration of this time will depend on the size of the output capacitance. During the capacitance charging time, the device enters into foldback mode. As the capacitance is charged, the current decreases below the current-limit threshold and the fault flags that are present at the FLGA and/or FLGB pins will then be deasserted.

In USB applications, it is required that output bulk capacitance is utilized to support hot-plug occurences. When the SP2526 is enabled, the flag may go active for about 1ms due to inrush current exceeding the current-limit setpoint. Additionally, during hot-plug events, inrush currents may also cause the fault flags at the FLGA and/or FLGB pins to go active. Since these conditions are not valid overcurrent faults, the USB controller must ignore the fault flags during these events. To prevent this, a 1ms RC filter can be implemented as shown in *Figure 5*. Alterna-

 © Copyright 2001 Sipex Corporation

tively, a 1ms debounce routine may be programmed into the USB logic controller, eliminating the need for the RC filter.

Soft Start Condition

The soft start feature of the SP2526 is implemented by holding the output turn-on rise time to 1ms. When off, the device has high impedance MOSFET channels that slowly become low impedance as the device powers on. This prevents an inrush current from causing voltage drops that result from charging a capacitive load and can pull the USB voltage bus below specified levels. This satisfies the USB voltage droop requirements for bus-powered applications. Refer to the circuit in *Figure 6*.

The **SP2526** can provide inrush current limiting for applications with large load capacitances where C_{BULK} > 10µF. Refer to the circuit in *Figure 7* for a configuration that will meet USB transient regulation specifications with large load capacitances.

Enable Input

The ENA and ENB control pins must be driven to a logic high or logic low for a clearly defined signal input. Floating these control lines may cause unpredictable operation.

USB Compliance

The SP2526 is ideal for self-powered and bus-powered Universal Serial Bus (USB) applications. A USB port provides a +5.0V bus and ground return line in addition to a twisted pair for data.

The SP2526 will comply with the following USB requirements:

1) The fault current is well below the UL 25VA safety requirements;

2) The Flag Outputs are available to indicate fault conditions to USB controllers;

3) The MOSFET switches' low on-resistance meets USB voltage drop requirements;

4) Each MOSFET switch channel can supply 500mA as required by USB downstream devices;

5) Soft start eliminates any momentary voltage drops on the upstream port that may occur when the switches are enabled in bus-powered applications.

Refer to *Table 1* for a USB compliance summary of the SP2526. Additional features include the following:

6) An Undervoltage Lockout ensures that the device remains off unless there is a valid input supply voltage present;

7) +3.3V and +5.0V logic compatible enable inputs;

8) Thermal Shutdown prevents the possiblity of catastrophic switch failure from high-current loads;

8) The device is available in both active-high and active-low versions.

Refer to *Figures 8* to *26* for typical performance characteristics of the SP2526.

 © Copyright 2001 Sipex Corporation

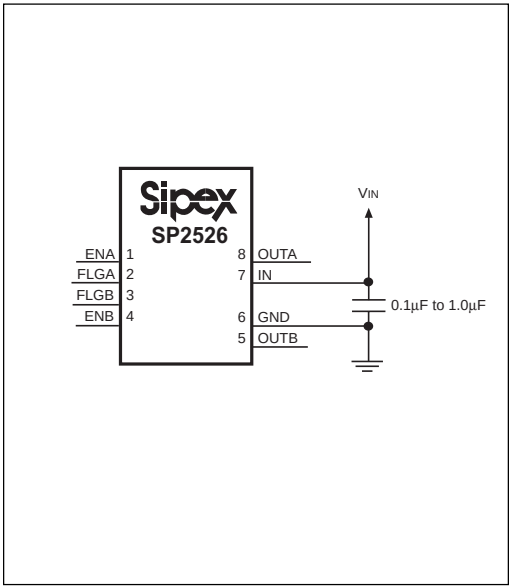

Figure 4. Bypass Capacitor at the Supply Pins

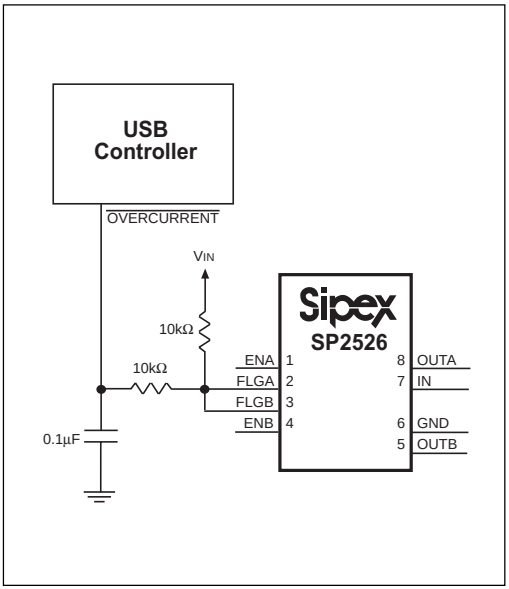

Figure 5. An RC Filter for Overcurrent Faults

USB Requirement	SP2526 Compliant Feature
Inrush current limiting required	Soft start turns on in 1ms
Suspend State of <500µA Required	Suspend Current of 1µA maximum
Bus powered hubs must have 350mV maximum drop from cable plug to port	Switch on resistance of 140mΩ maximum (translates to 70mV at 500mA)
Voltage supplied to host or hub port is +4.75V to +5.25V	Operating range of +3.0V to +5.5V
A device that draws bus power must have a stable supply within 100ms of V_{BUS} reaching +4.4V	Turns on in 1ms
Over-current reporting capability required	Open drain fault flags

Table 1. USB Protocol Compliance of the SP2526 device

 © Copyright 2001 Sipex Corporation

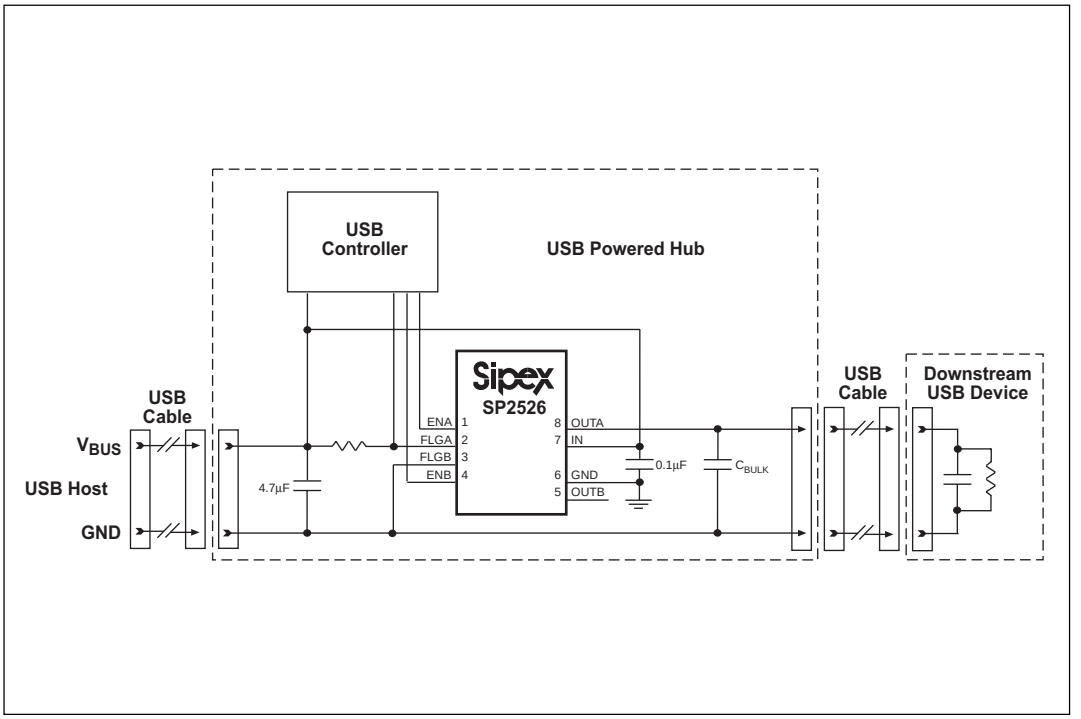

Figure 6. Soft Start Circuit Configuration for a Single Channel USB-powered Application with the SP2526

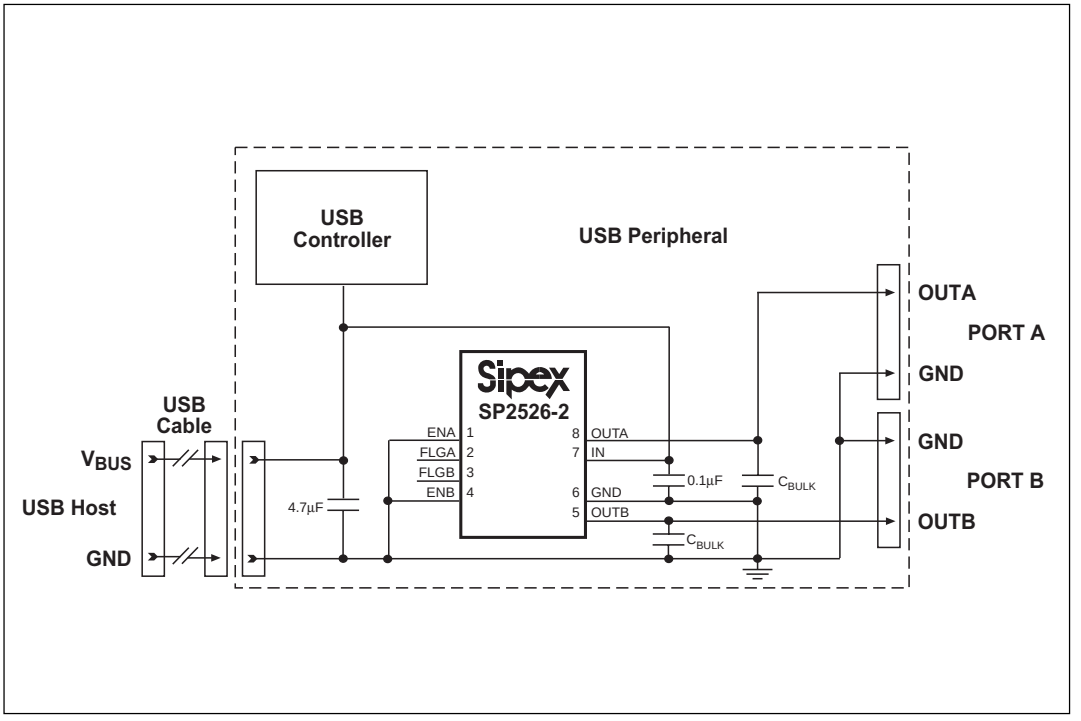

Figure 7. Soft Start Circuit Configuration for SP2526 Applications with Large Load Capacitances

 © Copyright 2001 Sipex Corporation

PERFORMANCE CHARACTERISTICS

V_{IN} = +5.0V, single MOSFET switch section, and T_{AMB} = +25°C unless otherwise noted.

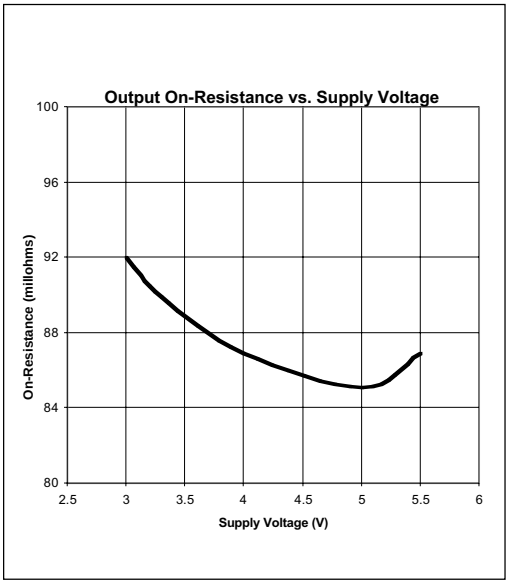

Figure 8. Output On-Resistance vs. Supply Voltage

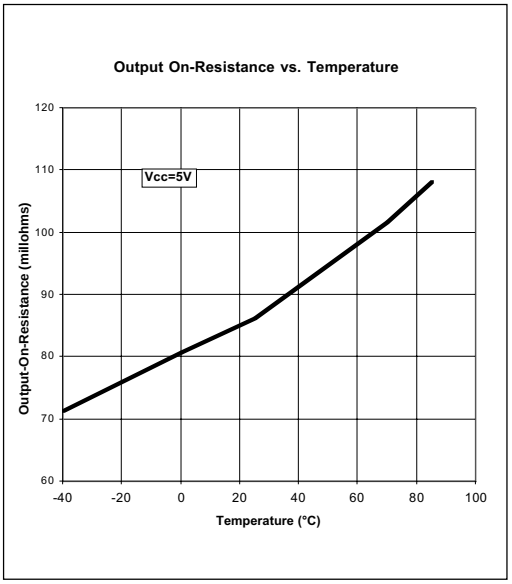

Figure 9. Output On-Resistance vs. Temperature

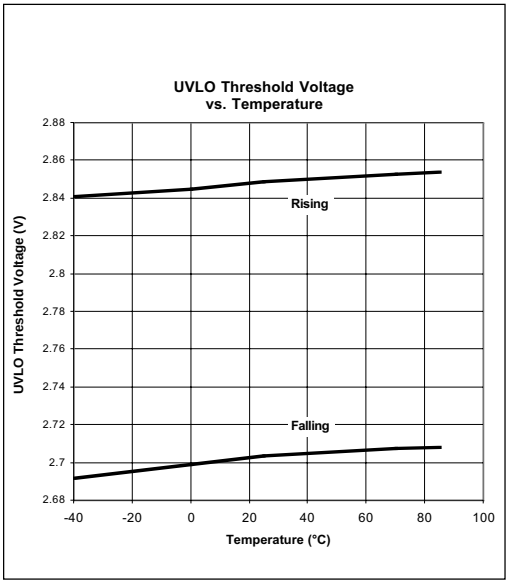

Figure 10. Undervoltage Threshold Voltage vs. Temperature

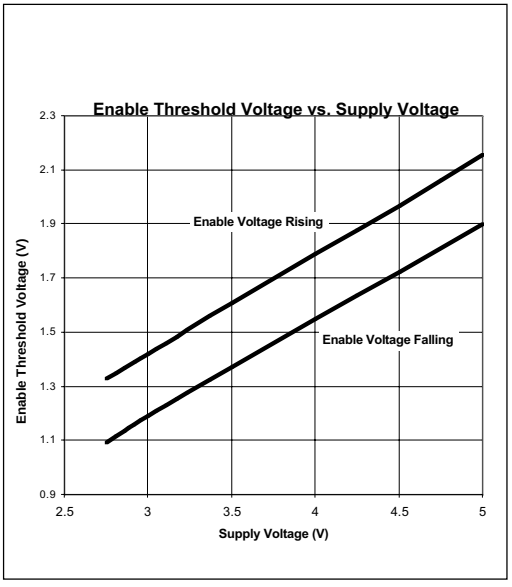

Figure 11. Control Threshold vs. Supply Voltage

 © Copyright 2001 Sipex Corporation

PERFORMANCE CHARACTERISTICS (continued)

V_{IN} = +5.0V, single MOSFET switch section, and T_{AMB} = +25°C unless otherwise noted.

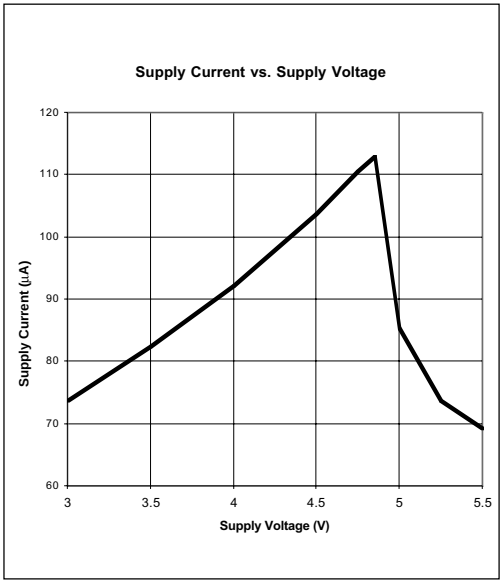

Figure 12. On-state Supply Current vs. Supply Voltage

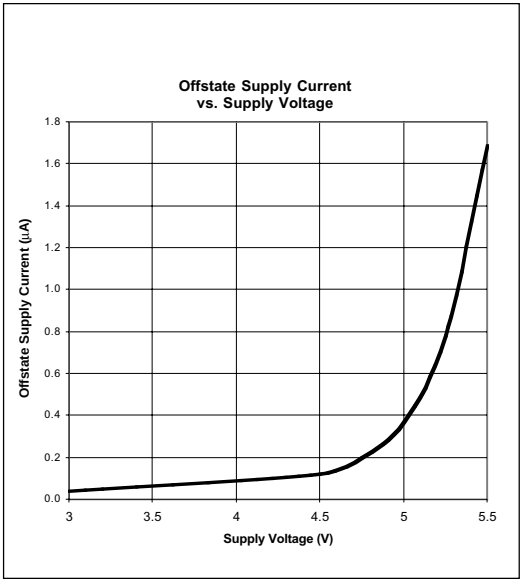

Figure 13. Off-state Supply Current vs. Supply Voltage

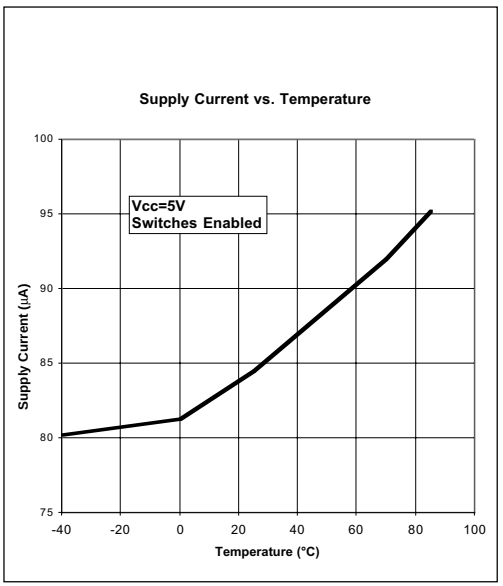

Figure 14. On-state Supply Current vs. Temperature

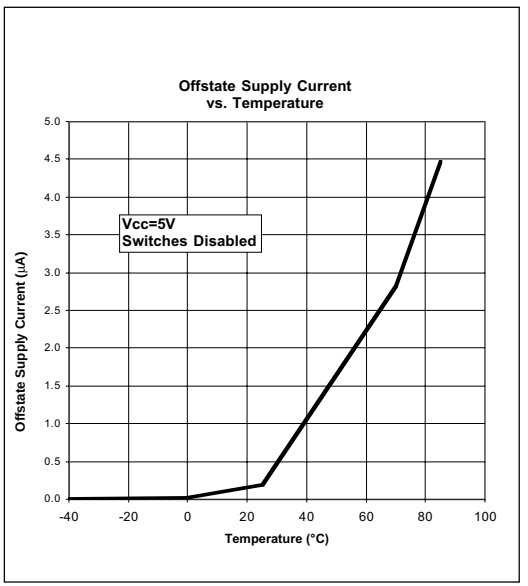

Figure 15. Off-state Supply Current vs. Temperature

 © Copyright 2001 Sipex Corporation

PERFORMANCE CHARACTERISTICS (continued)

V_{IN} = +5.0V, single MOSFET switch section, and T_{AMB} = +25°C unless otherwise noted.

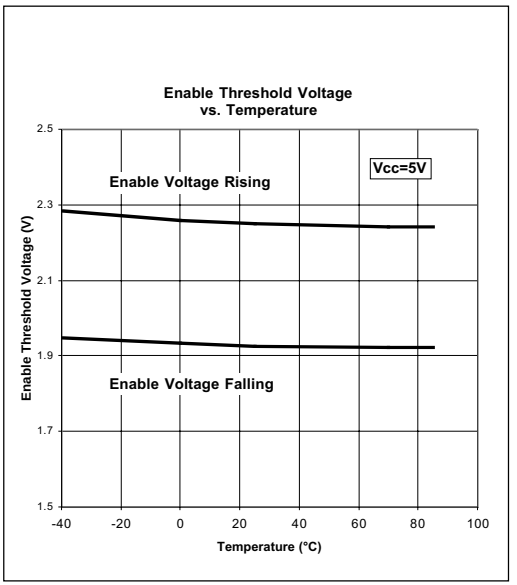

Figure 16. Control Threshold vs. Temperature

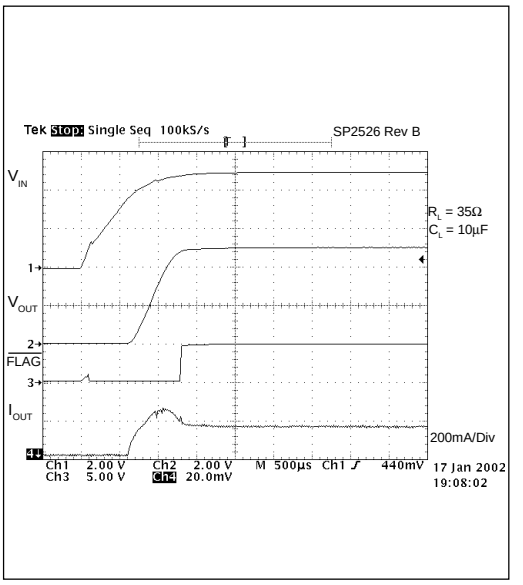

Figure 17. Input Voltage Response

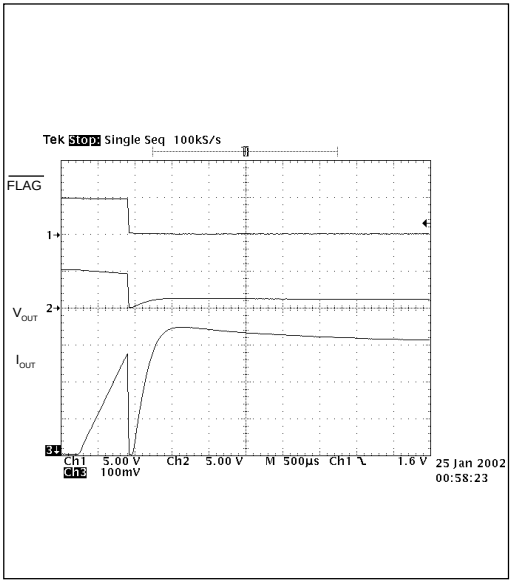

Figure 18. Current-Limit Response With a Ramped Load

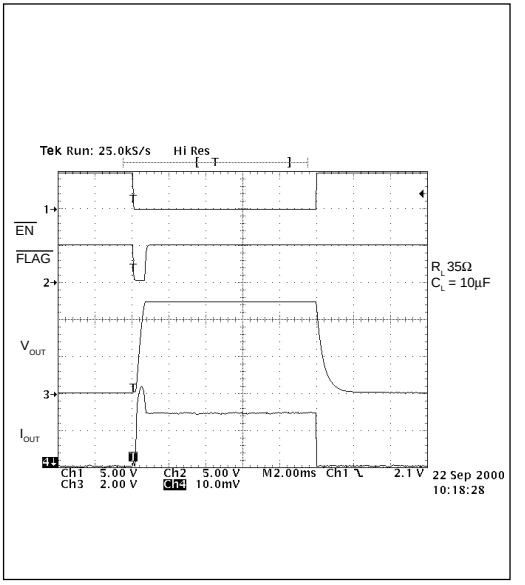

Figure 19. Turn-on/Turn-off Characteristics Where R_L= 35Ω and C_L = 10µF

 © Copyright 2001 Sipex Corporation

PERFORMANCE CHARACTERISTICS (continued)

V_{IN} = +5.0V, single MOSFET switch section, and T_{AMB} = +25°C unless otherwise noted.

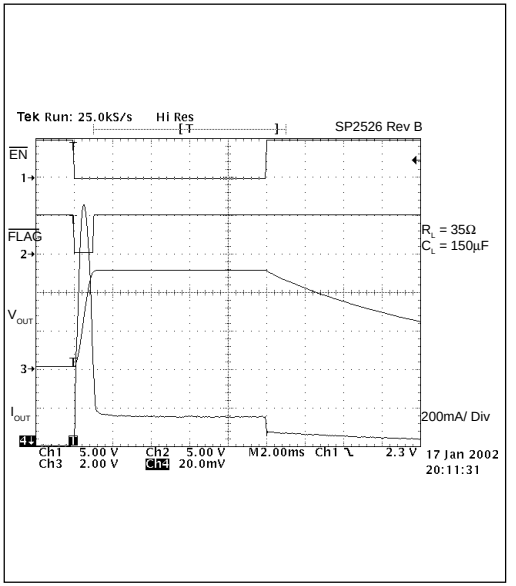

Figure 20. Turn-on/Turn-off Characteristics where R_L = 35Ω and C_L = 150µF

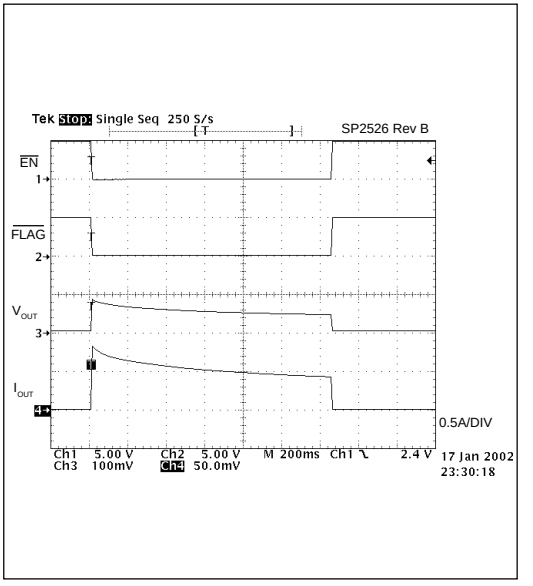

Figure 21. Short Circuit Response (Enable into Short Circuit)

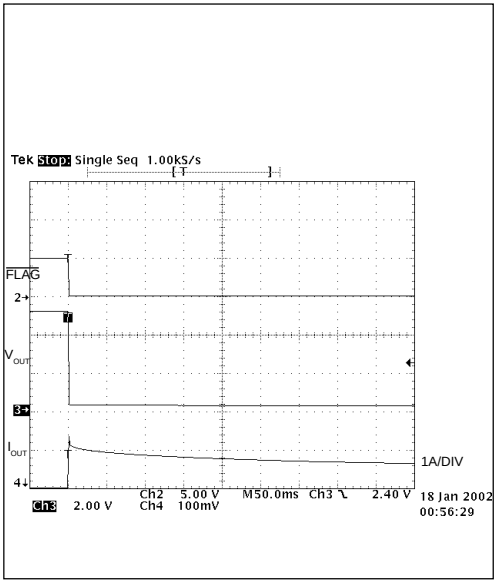

Figure 22. Short Circuit Response (Short Applied To Output)

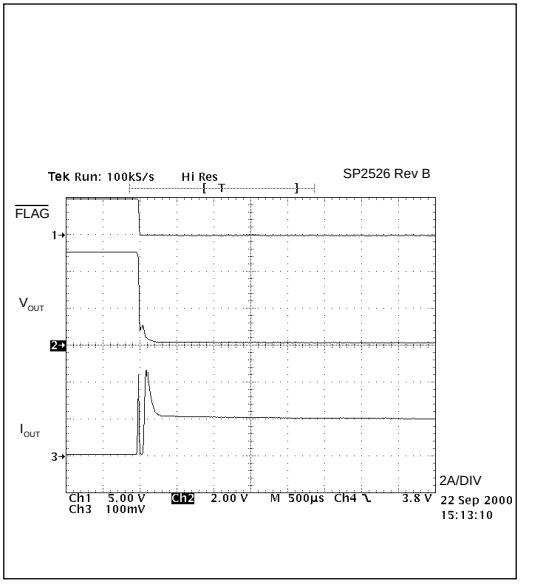

Figure 23. Short Circuit Transient Response (Short Applied To Output)

 © Copyright 2001 Sipex Corporation

PERFORMANCE CHARACTERISTICS (continued)

V_{IN} = +5.0V, single MOSFET switch section, and T_{AMB} = +25°C unless otherwise noted.

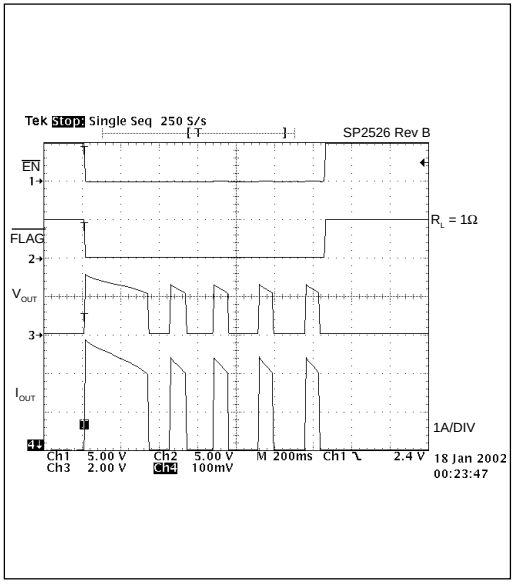

Figure 24. Short Circuit Response (Enable into Short Circuit)

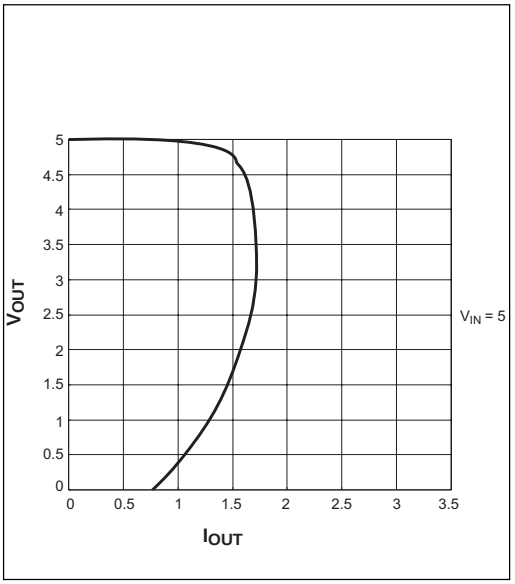

Figure 25. Current Limit Response (Pulsed Load applied at Output)

 © Copyright 2001 Sipex Corporation

PACKAGE: PLASTIC SMALL OUTLINE (SOIC) (NARROW)

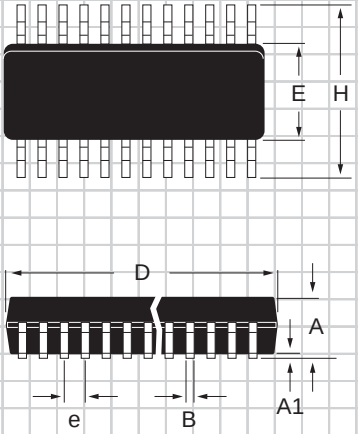

DIMENSIONS (Inches) Minimum/Maximum (mm)	8–PIN	14–PIN	16–PIN
A	0.053/0.069 (1.346/1.748)	0.053/0.069 (1.346/1.748)	0.053/0.069 (1.346/1.748)
A1	0.004/0.010 (0.102/0.249	0.004/0.010 (0.102/0.249)	0.004/0.010 (0.102/0.249)
B	0.014/0.019 (0.35/0.49)	0.013/0.020 (0.330/0.508)	0.013/0.020 (0.330/0.508)
D	0.189/0.197 (4.80/5.00)	0.337/0.344 (8.552/8.748)	0.386/0.394 (9.802/10.000)
E	0.150/0.157 (3.802/3.988)	0.150/0.157 (3.802/3.988)	0.150/0.157 (3.802/3.988)
e	0.050 BSC (1.270 BSC)	0.050 BSC (1.270 BSC)	0.050 BSC (1.270 BSC)
H	0.228/0.244 (5.801/6.198)	0.228/0.244 (5.801/6.198)	0.228/0.244 (5.801/6.198)
h	0.010/0.020 (0.254/0.498)	0.010/0.020 (0.254/0.498)	0.010/0.020 (0.254/0.498)
L	0.016/0.050 (0.406/1.270)	0.016/0.050 (0.406/1.270)	0.016/0.050 (0.406/1.270)
Ø	0°/8° (0°/8°)	0°/8° (0°/8°)	0°/8° (0°/8°)

 © Copyright 2001 Sipex Corporation

PACKAGE: PLASTIC DUAL–IN–LINE (NARROW)

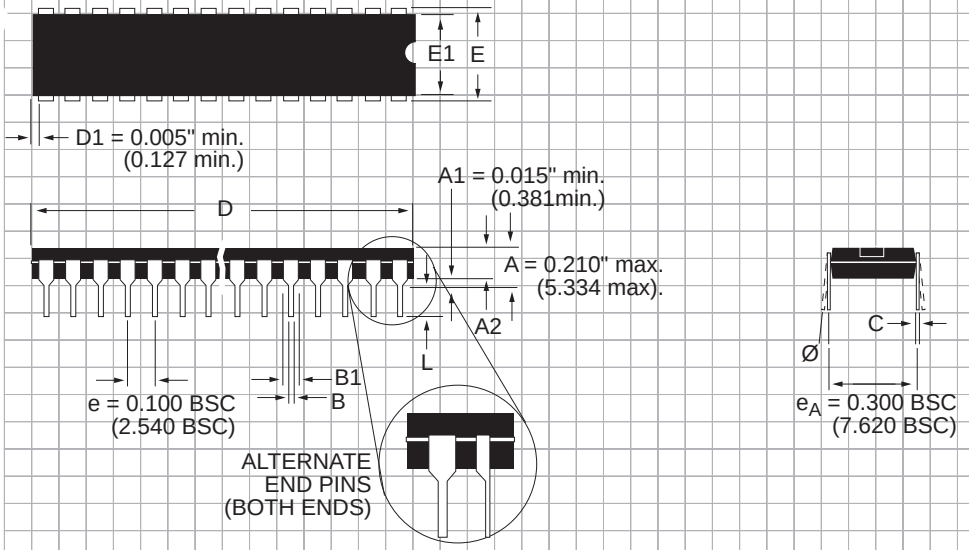

DIMENSIONS (Inches) Minimum/Maximum (mm)	8–PIN	14–PIN	16–PIN	18–PIN	20–PIN	22–PIN
A2	0.115/0.195 (2.921/4.953)	0.115/0.195 (2.921/4.953)	0.115/0.195 (2.921/4.953)	0.115/0.195 (2.921/4.953)	0.115/0.195 (2.921/4.953)	0.115/0.195 (2.921/4.953)
B	0.014/0.022 (0.356/0.559)	0.014/0.022 (0.356/0.559)	0.014/0.022 (0.356/0.559)	0.014/0.022 (0.356/0.559)	0.014/0.022 (0.356/0.559)	0.014/0.022 (0.356/0.559)
B1	0.045/0.070 (1.143/1.778)	0.045/0.070 (1.143/1.778)	0.045/0.070 (1.143/1.778)	0.045/0.070 (1.143/1.778)	0.045/0.070 (1.143/1.778)	0.045/0.070 (1.143/1.778)
C	0.008/0.014 (0.203/0.356)	0.008/0.014 (0.203/0.356)	0.008/0.014 (0.203/0.356)	0.008/0.014 (0.203/0.356)	0.008/0.014 (0.203/0.356)	0.008/0.014 (0.203/0.356)
D	0.355/0.325 (9.017/10.160)	0.735/0.775 (18.669/19.685)	0.780/0.800 (19.812/20.320)	0.880/0.920 (22.352/23.368)	0.980/1.060 (24.892/26.924)	1.145/1.155 (29.083/29.337)
E	0.300/0.325 (7.620/8.255)	0.300/0.325 (7.620/8.255)	0.300/0.325 (7.620/8.255)	0.300/0.325 (7.620/8.255)	0.300/0.325 (7.620/8.255)	0.300/0.325 (7.620/8.255)
E1	0.240/0.280 (6.096/7.112)	0.240/0.280 (6.096/7.112)	0.240/0.280 (6.096/7.112)	0.240/0.280 (6.096/7.112)	0.240/0.280 (6.096/7.112)	0.240/0.280 (6.096/7.112)
L	0.115/0.150 (2.921/3.810)	0.115/0.150 (2.921/3.810)	0.115/0.150 (2.921/3.810)	0.115/0.150 (2.921/3.810)	0.115/0.150 (2.921/3.810)	0.115/0.150 (2.921/3.810)
Ø	0°/ 15° (0°/15°)	0°/ 15° (0°/15°)	0°/ 15° (0°/15°)	0°/ 15° (0°/15°)	0°/ 15° (0°/15°)	0°/ 15° (0°/15°)

 © Copyright 2001 Sipex Corporation

ORDERING INFORMATION

Model	Temperature Range	Package Types
SP2526-1EN	-40°C to +85°C	8-pin NSOIC
SP2526-1EN/TR	-40°C to +85°C	(Tape & Reel) 8-pin NSOIC
SP2526-2EN	-40°C to +85°C	8-pin NSOIC
SP2526-2EN/TR	-40°C to +85°C	(Tape & Reel) 8-pin NSOIC

SIGNAL PROCESSING EXCELLENCE

Sipex Corporation

Headquarters and
Sales Office
22 Linnell Circle
Billerica, MA 01821
TEL: (978) 667-8700
FAX: (978) 670-9001
e-mail: sales@sipex.com

Sipex Corporation reserves the right to make changes to any products described herein. Sipex does not assume any liability arising out of the application or use of any product or circuit described hereing; neither does it convey any license under its patent rights nor the rights of others.