SP2526
Evaluation Board Manual

- Easy Evaluation for the **SP2526** USB Compliant Power Control Switch
- **SP2526**NEB contains 2 Independent USB Power Switches with +3.0V to +5.5V Input Range
- Low PC Board Resistance for testing 100mΩ Max On Resistance of **SP2526**
- Evaluation Board complete with all capacitors & ferrite beads to implement a USB Compliant Power Port
- Pin-to-Pin Compatible with Micrel MIC2526

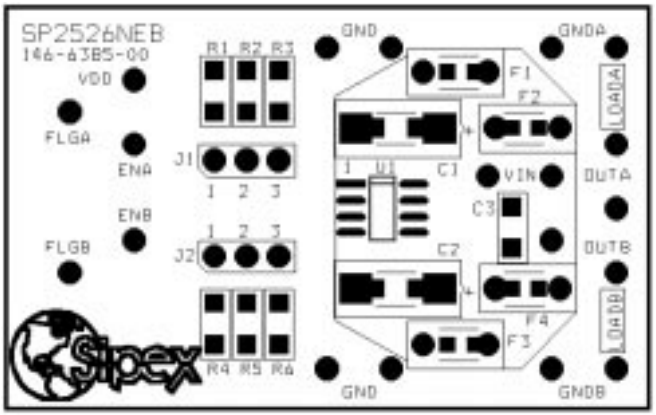

DESCRIPTION

The **SP2526 Evaluation Board** is designed to help the user evaluate the performance of the **SP2526** for use as a dual +3.0V to +5.5V USB Supervisory Control Switch. Each channel of the **SP2526** can be evaluated for its low on-resistance and capacity to supply 500mA output current. The **SP2526 Evaluation Board** is designed with independent V_{DD} and V_{IN} connections to make it easy to measure the very low quiescent current of 100µA maximum, and low PC board resistance for evaluating the very low on-resistance of 100mΩ maximum.

The evaluation board is a completely assembled and tested surface mount board which provides easy probe access points to all **SP2526** Inputs and Outputs so that the user can quickly connect and measure electrical characteristics and waveforms.

 © Copyright 2000 Sipex Corporation

SP2526 EVALUATION BOARD

The next two sections describe the **SP2526** Board Layout and Using the **SP2526 Evaluation Boards**. A table of **SP2526** Pin Assignments is also included with details on Input/Output pin function. A **SP2526 Evaluation Board** List of Materials table is provided with some manufacturers part numbers to use as a reference. Finally, a schematic and drawings of the PC Board Layout are included of the **SP2526 Evaluation Board**.

BOARD LAYOUT

The **SP2526 Evaluation Board** has been designed to easily and conveniently provide access to all Inputs and Outputs of the **SP2526** device under test. Position the board with the silkscreen lettering upright (see *Figure 1* Component Layout) and you will see the **SP2526** SOIC labeled U1 in the center right of the board, and around it the Capacitors C1,2,3 and Ferrite Beads F1-4 forming the Dual USB Supervisory Switch.

The **SP2526 Evaluation Board** provides solder pads to connect wires to an external power supply and load, as well as Test Point Posts to monitor the Input and Output Voltages at these connections to the **SP2526**. The **SP2526** PC Board Layout has been designed with low resistance input and output connections of 2mΩ each to provide the lowest On-Resistance for utilizing the USB Switch.

The PC Layout is given in Figures 1-3 for the user as an aid in designing a low resistance USB switch on a PC board. The PC board used has 1oz Copper with V_{IN}, Ground, V_{OUT} traces of at least 0.1inch width for 5mΩ/inch or looked at another way as 0.5mΩ/square. This means to maintain a trace resistance of only 2mΩ, you need to have only 4 squares of trace from one end to another. Resistance is further reduced by some additional wide V_{IN}, Ground and V_{OUT} connections on the bottom side of the PC board which are connected to the top side with large through-hole connections. For best results with on-resistance in the ferrites used for EMI suppression in the Output and Ground connections, through-hole ferrite beads were used for F1-4, yielding 2mΩ per input or output connection versus using surface-mount size 0805 ferrite beads which yielded 5mΩ per input or output connection.

USING THE EVALUATION BOARD

The **SP2526 Evaluation Board** can be connected to a power supply using a pair of wires soldered to the solder pads marked provided "VIN" and "GND". It is good practice to not switch power on until power connections are made to the evaluation board.

Powering Up & Using the SP2526 Circuit

V_{IN} — U1-7 — Solder wire to VIN solder pad on component side of board and connect to external Power Supply positive. V_{IN} = +3.0V to +5.5V. Connect Voltmeter positive or Oscilloscope probe to V_{IN} test point post to monitor actual voltage input to PC board.

GND — U1-6 — Solder wire to GND solder pad on component side of board and connect to external Power Supply negative. Connect Voltmeter negative or Oscilloscope probe ground to GND test point post to monitor actual voltage input to PC board.

OUTA — U1-8 — Solder wire to OUTA solder pad on component side of board and connect to external load. Connect Voltmeter positive or Oscilloscope probe to OUTA test point post to monitor actual voltage output at the PC board.

GNDA — Solder wire to GNDA solder pad on component side of board and connect to external LoadA return. Connect Voltmeter negative or Oscilloscope probe ground to GND test point post to monitor actual voltage input to PC board.

OUTB — U1-5 — Solder wire to OUTB solder pad on component side of board and connect to external load. Connect Voltmeter positive or Oscilloscope probe to OUTB test point post to monitor actual voltage output at the PC board.

GNDB — Solder wire to GNDB solder pad on component side of board and connect to external LoadB return. Connect Voltmeter negative or Oscilloscope probe ground to GND test point post to monitor actual voltage input to PC board.

 © Copyright 2000 Sipex Corporation

V_{DD} — Connect to a second Power Supply 5V (or 3.3V) connection – V_{DD} provides the pull-up voltage for Enables ENA & ENB and Flags FLGA & FLGB. This separate supply connection allows the user to separately measure V_{IN} supply current.

GND — Second Power Supply GND Connection – connect to supply return for V_{DD}.

ENA — U1-1 —Enable A Input must be connected High or Low – open produces unstable behavior, so be sure to connect V_{DD} to an external 3.3V or 5V source. See *Table 1* Enable Jumpers for information on Enable Jumper J1 position. The user can actively control Switch A with an external Logic signal.

FLGA — U1-2 — Flag A output is open drain and has a pull-up to V_{DD} (which should be connected to an external source). Connect FLGA to voltmeter or oscilloscope to monitor Switch A for flags when Low if Under-voltage, Over-current or Over-temperature occurs.

.

ENB — U1-4 — Enable B Input must be connected High or Low – open produces unstable behavior, so be sure to connect V_{DD} to an external 3.3V or 5V source. See *Table 1* Enable Jumpers for information on Enable Jumper J2 position. The user can actively control Switch B with an external Logic signal.

FLGB — U1-3 — Flag B output is open drain and has a pull-up to V_{DD} (which should be connected to an external source). Connect FLGB to voltmeter or oscilloscope to monitor Switch B for flags when Low if Under-voltage, Over-current or Over-temperature occurs.

Using the Enable Jumbers J1 & J2

The jumpers J1& J2 have 2 positions, as described below. Connecting a logic level to the ENA or ENB test point post will override the pull-up or pull-down to actively control the switch.

Part Number	Enable	Enable A J1 Position	Enable B J2 Position
SP2526-1	Active High	1-2 Pull-up	1-2 Pull-up
SP2526-2	Active Low	2-3 Pull-down	2-3 Pull-down

Table 1. Enable Jumpers J1 & J2

 © Copyright 2000 Sipex Corporation

Table 2. SP2526EB PIN ASSIGNMENTS

SP2526EB Pin Assignments			
Pin #	**Pin Name**	**Pin Function**	**Input/Output Pin Name**
	SP2526-1		
1	ENA	Enable A Input Active High	ENA
2	FLGA	Fault Flag A Output Active Low	FLGA
3	FLGB	Fault Flag B Output Active Low	FLGB
4	ENB	Enable B Input Active High	ENB
5	OUTB	Switch B Output	OUTB
6	GND	Ground	GND
7	IN	Supply Input	V_{IN}
8	OUTA	Switch A Output	OUTA
	SP2525-2		
1	ENA	Enable A Input Active Low	ENA
2	FLGA	Fault Flag A Output Active Low	FLGA
3	FLGB	Fault Flag B Output Active Low	FLGB
4	ENB	Enable B Input Active Low	ENB
5	OUTB	Switch B Output	OUTB
6	GND	Ground	GND
7	IN	Supply Input	V_{IN}
8	OUTA	Switch A Output	OUTA

 © Copyright 2000 Sipex Corporation

Table 3. SP2526EB LIST OF MATERIALS

SP2526 Evaluation Board List of Materials							
Ref. Des.	Qty.	Manuf.	Manuf. Part Number	Digi-Key Part Number	Layout Size	Component	Vendor Phone Number
PCB	1	Sipex	146-6385-00	-	1.2"x1.9"	SP2526 Eval PCB	978-667-7800
U1	1	Sipex	SP2526XCN	-	SO-8	Dual USB Switch	
C1,2	2	Kemet	T495D157K010AS	-	“D” SM	6.3V 150uF Low ESR	864-963-6300
C3	1	Panasonic	ECJ-VB1E104K	PCC1883CT-ND	1206 SM	X7R 0.1uF 25V	Digi-Key
F1-4	4	Panasonic	EXC-ELDR25C	P9819BK-ND	7.5X2.2mm	EMI Bead	800-344-4539
F1-4	4	Panasonic	EXC-ELDR35C	P9817BK-ND	9X2.2mm	EMI Bead	Digi-Key
F1-4	4	Panasonic	EXC-L351350	P9823-ND	5X3.5mm	EMI Bead	Digi-Key
F1-4	4	Panasonic	EXC-ML20A390U	P10191CT-ND	0805 SM	SM EMI Bead	Digi-Key
R1-6	6	Panasonic	ERJ-8GEYJ104	P100KECT-ND	1206 SM	100K ohm 1/8W 5%	Digi-Key
TP	12	Mill-Max	3137-3002-10-0080	ED5009-ND	.042 Dia	Test Point Female Pin	Digi-Key
J1,2	2	Sullins	PZC36SAAN	S1011-36-ND	.32x.12	36-Pin (3x12) Header	Digi-Key
	2	Sullins	STC02SYAN	S9000-ND	.2x.1	Shunt	Digi-Key

 © Copyright 2000 Sipex Corporation

SP2526 Evaluation Board Schematic

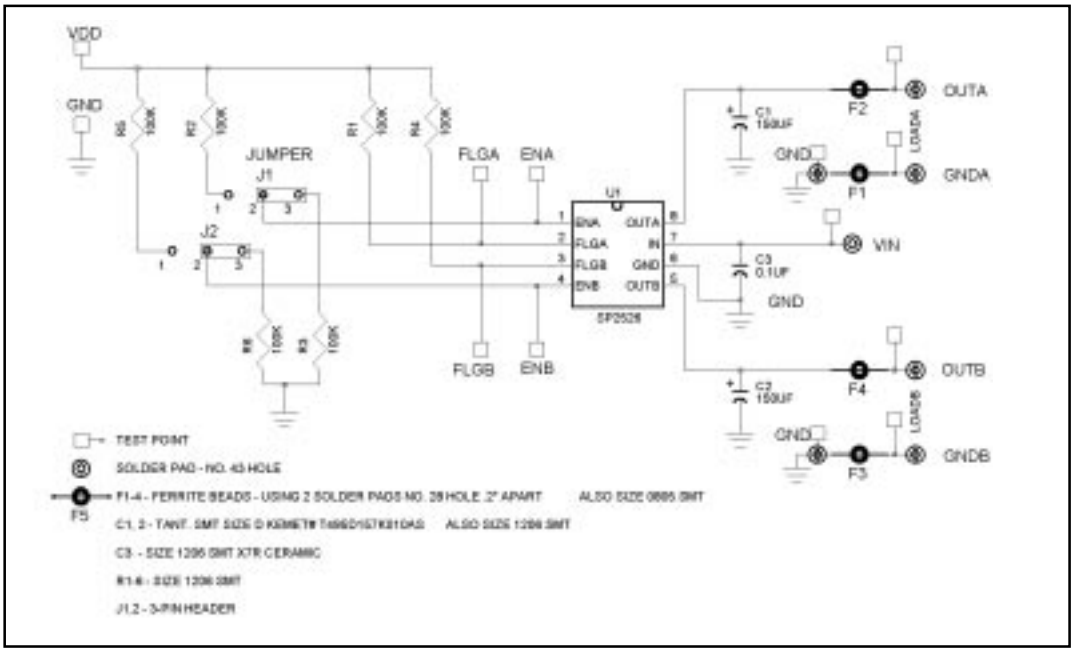

 © Copyright 2000 Sipex Corporation

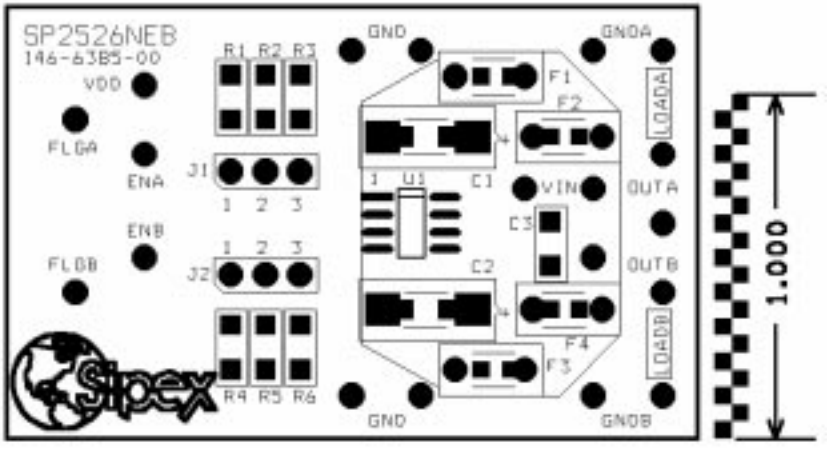

Figure 1. SP2526NEB Component Placement

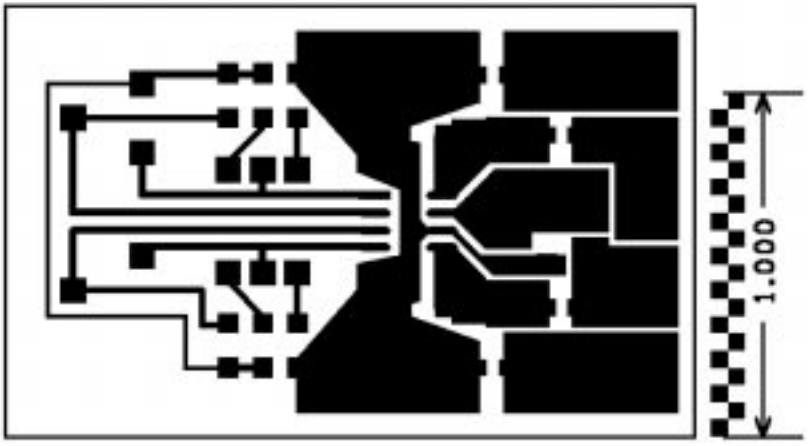

Figure 2. SP2526NEB PC Layout Component Side

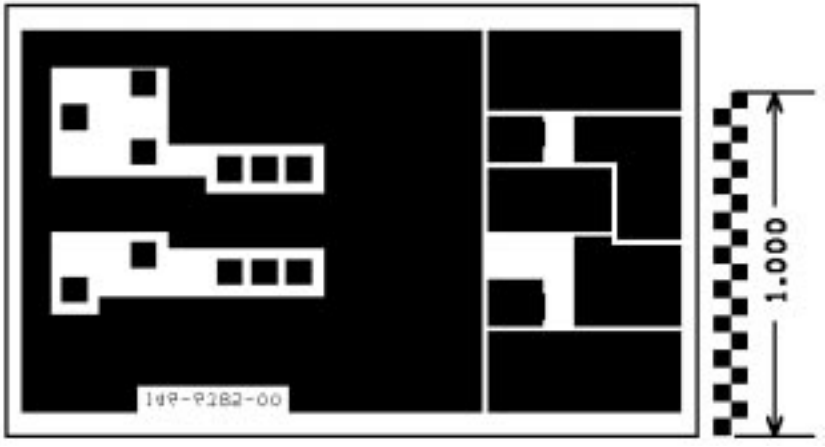

Figure 3. SP2526NEB PC Layout Soldier Side

 © Copyright 2000 Sipex Corporation

ORDERING INFORMATION

Model	Package
SP2526-1NEB	SP2526EN-1 Evaluation Board
SP2526-2NEB	SP2526EN-2 Evaluation Board

Sipex Corporation

SIGNAL PROCESSING EXCELLENCE

Sipex Corporation

Headquarters and Sales Office
22 Linnell Circle
Billerica, MA 01821
TEL: (978) 667-8700
FAX: (978) 670-9001
e-mail: sales@sipex.com

Sales Office
233 South Hillview Drive
Milpitas, CA 95035
TEL: (408) 934-7500
FAX: (408) 935-7600

European Sales Offices:

GERMANY:
Sipex GmbH
Gautinger Strasse 10
82319 Starnberg
TEL: 49.81.51.89810
FAX: 49.81.51.29598
e-mail: sipex-starnberg@t-online.de

Far East:

JAPAN:
Nippon Sipex Corporation
Yahagi No. 2 Building
3-5-3 Uchikanda, Chiyoda-ku
Tokyo 101, Japan
TEL: 011.81.3.3256.0577
FAX: 011.81.3.3256.0621

Sipex Corporation reserves the right to make changes to any products described herein. Sipex does not assume any liability arising out of the application or use of any product or circuit described hereing; neither does it convey any license under its patent rights nor the rights of others.