Astrodyne TDI
Now you have power.

200W Single Output with PFC Function

SP200 series



- Universal AC input
- Protections:Short circuit/Over load/Over voltage/Over temperarure
- Built-in active PFC function, PF >0.93
- Built-in cooling fan speed control
- Built-in constant current limiting circuit
- Built-in fan speed control
- Fixed switching frequency at PFC:67KHz PWM:134KHz
- LED indicator for power on

Model Number	Output Volts	Output Amps	OVP	Min Load	DC Volt Adjust	Efficiency
SINGLE OUTPUT						
SP200-3.3	3.3 Volts(DC)	40 Amps	3.63 ~ 4.46Volt(DC)	0~40Amps	3.14~3.63Volt(DC)	65%
SP200-5	5 Volts(DC)	40 Amps	5.5 ~ 6.75Volt(DC)	0~40Amps	4.75~5.5Volt(DC)	71%
SP200-7.5	7.5 Volts(DC)	26.7 Amps	8.25 ~ 10.13Volt(DC)	0~26.7Amps	7.13~8.25Volt(DC)	76%
SP200-12	12 Volts(DC)	16.7 Amps	13.2 ~ 16.2Volt(DC)	0~16.7Amps	11.4~13.2Volt(DC	79%
SP200-13.5	13.5 Volts(DC)	14.9 Amps	14.85 ~ 18.2Volt(DC)	0~14.9Amps	12.8~14.9Volt(DC)	80%
SP200-15	15 Volts(DC)	13.4 Amps	16.5 ~ 20.25Volt(DC)	0~13.4Amps	14.3~16.5Volt(DC)	81%
SP200-24	24 Volts(DC)	8.4 Amps	26.4~ 32.4Volt(DC)	0~8.4Amps	22.8~26.4Volt(DC)	83%
SP200-27	27 Volts(DC)	7.5 Amps	29.7 ~ 36.45Volt(DC)	0~7.5Amps	25.7~29.7Volt(DC)	83%
SP200-48	48 Volts(DC)	4.2 Amps	52.8~ 64.8Volt(DC)	0~4.2Amps	45.6~52.8Volt(DC)	84%

Astrodyne TDI
Now you have power.

200W Single Output with PFC Function

SP200 series

INPUT SPECIFICATIONS

Input Voltage Range	90 ~ 264VAC 120~370 Volts(DC)
Frequency Range	47-63 Hz
Inrush Current, typ: (cold start)	20Amps/115VAC; 40Amps 230VAC
Input Current, typ	3.5Amps @115VAC
	1.7 Amps @ 230VAC
Leakage current	< 2mAmps / 240VAC
Min Load	See Selection Chart
Power Factor @ FL	PF> 0.93 / 230VAC
	0.98 / 115VAC

OUTPUT SPECIFICATIONS

Voltage and Current	See Selection Chart
Line Regulation	±0.5%
Load Regulation	±0.1%: 3.3~7.5Volts(DC)
	±0.5%: 12~48Volts(DC)
Voltage Tolerance (Note 2)	±2.0%: 3.3;15Volts(DC)
	±1.0%: 24~48Volts(DC)
Ripple/Noise (Note 1)	100mVpk-pk: 3.3~15Volts(DC)
	150mVpk-pk: 24;27Volts(DC)
	250mVpk-pk: 48Volts(DC)
Hold Up Time (typ)	20mS @ FL
Setup, Rise Time	600mS, 30mS @ FL
Over Voltage Protection	See Selection Chart
	Shut down o/p voltage, re-power
Over Current Protection	105 ~ 150% rated output power
	Constant current limiting,auto recover
Over Temperature	95°C ±5°C TSW1: detect on
	heatsink of power transistor
	Shut down o/p voltage, auto recover
DC Volt Adjust	See Selection Chart

GENERAL SPECIFICATIONS

Safety	UL60950-1,
	TUV EN60950-1 Approved
Insulation Resistance	≥ 100MΩ / 500Volts(DC)
EMI	Compliance to EN55022 (CISPR22)
	Class B
EMS	Compliance to
	EN61000-4-2,3,4,5,6,8,11
	ENV50204,EN55024,
	light Industry Level, Criteria A
Harmonic Current	Compliance to EN61000-3-2,-3
Efficiency	See Selection Chart
Isolation	
	3000VAC Input - Output
	1500VAC Input - Ground
	500VAC Output - Ground

ENVIRONMENTAL SPECIFICATIONS

Oper. Temperature	-10°C to +60°C (See Derate Curve)
Storage Temperature	-20°C to +85°C, 10~95% RH
Relative Humidity	20~90% RH non cond
Temperature Coefficient	0.05% / °C (0-50°C)
MTBF	183.8KHrs min,MIL-HDBK-217F(25°C)
Vibration	10~500Hz, 2G10min./1cycle, period for
	60min. each along X, Y, Z axes

PHYSICAL SPECIFICATIONS

Size	199x99 x 50mm (7.83"x3.90 "x1.97")
Weight	29.99 oz (850g)

NOTE

1. Ripple & noise are measured at 20MHz of bandwidth by using a 12" twisted pair-wire terminated with a 0.1uf & 47uf parallel capacitor.
2. Tolerance : includes set up tolerance, line regulation and load regulation.

All specifications are typical at nominal input, full load, and 25°C unless otherwise noted

Astrodyne TDI
Now you have power.

200W Single Output with PFC Function

SP200 series

■ Mechanical Specification

Case No. 916B Unit:mm

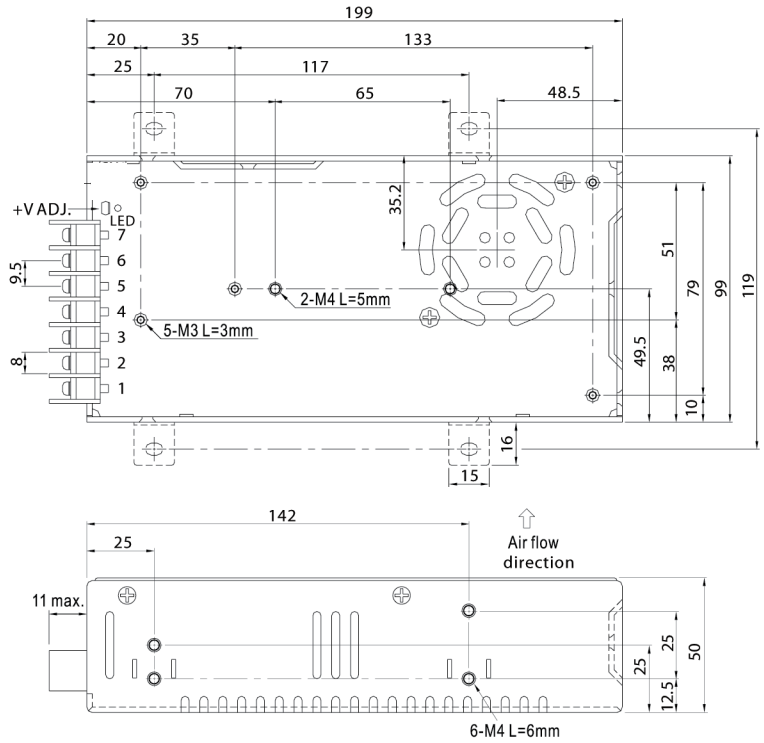

Terminal Pin No. Assignment

Pin No.	Assignment	Pin No.	Assignment
1	AC/L	4,5	DC OUTPUT -V
2	AC/N	6,7	DC OUTPUT +V
3	FG ⏚		

■ Block Diagram

PFC fosc : 67KHz
PWM fosc : 134KHz

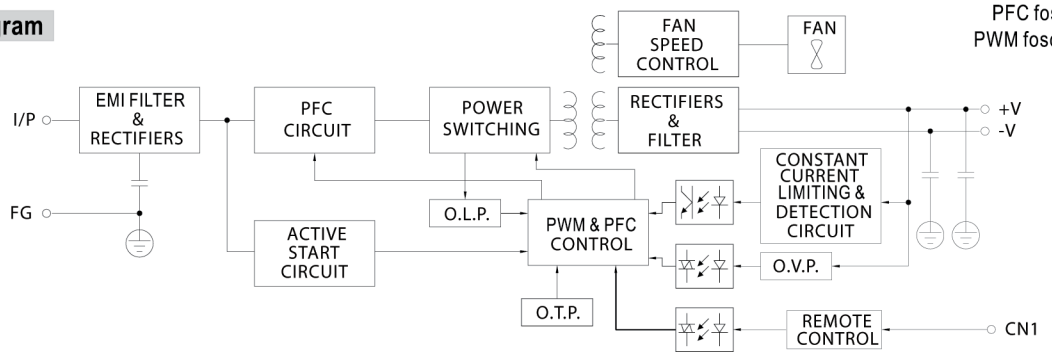

■ Derating Curve

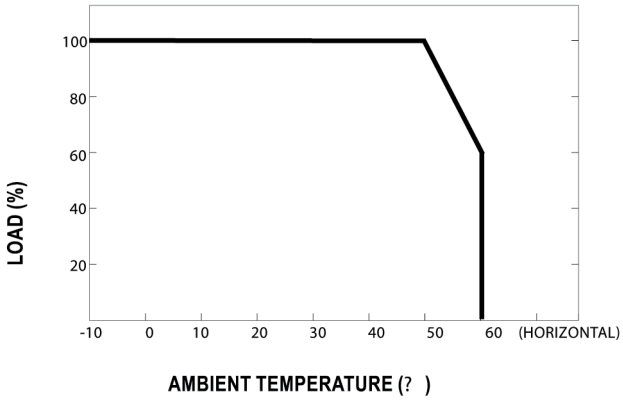

■ Output Derating VS Input Voltage

