Full Duplex RS-485 Transceivers

FEATURES

- +5V Only
- Low Power BiCMOS
- Driver/Receiver Enable (**SP1491E**)
- RS-485 and RS-422 Drivers/Receivers
- Pin Compatible with SN75179 **(SP1490E)**
- Pin Compatible with SN75180 **(SP1491E)**
- Improved ESD Specifications
  ±15kV Human Body Model
  ±15kV IEC1000-4-2 Air Discharge
  ±8kV IEC1000-4-2 Contact Discharge



APPLICATIONS

- Industrial Networks
- Telecom
- Motor Control
- HVAC/ Building Control

DESCRIPTION

The **SP1490E** is a low power differential line driver/receiver meeting RS-485 and RS-422 standards up to 20Mbps. The **SP1491E** is identical to the **SP1490E** with the addition of driver and receiver tri-state enable lines. Both products feature ±200mV receiver input sensitivity, over wide common mode range. The **SP1490E** is available in 8-pin plastic DIP and 8-pin NSOIC packages for operation over the commercial and industrial temperature ranges. The **SP1491E** is available in 14-pin DIP and 14-pin NSOIC packages for operation over the commercial and industrial temperature ranges.

BLOCK DIAGRAM

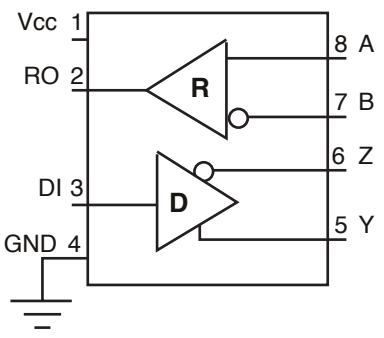

SP1490E

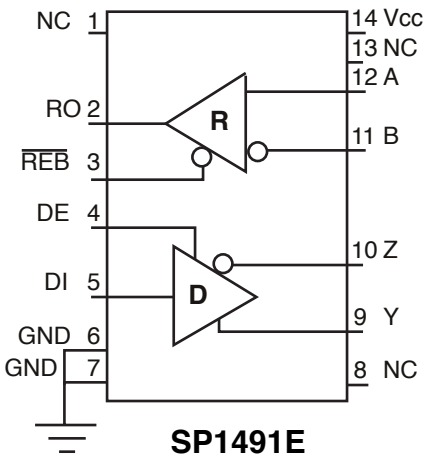

SP1491E

 © Copyright 2004 Sipex Corporation

ABSOLUTE MAXIMUM RATINGS

These are stress ratings only and functional operation of the device at these ratings or any other above those indicated in the operation sections of the specifications below is not implied. Exposure to absolute maximum rating conditions for extended periods of time may affect reliability.

V_{CC}.....+7V
Input Voltages
Drivers.....-0.5V to (V_{CC}+0.5V)
Receivers.....±14V
Output Voltages
Drivers.....±14V
Receivers.....-0.5V to (V_{CC}+0.5V)
Storage Temperature.....-65˚C to +150˚
Power Dissipation.....1000mW

ELECTRICAL CHARACTERISTICS

T_{MIN} to T_{MAX} and V_{CC} = 5V ± 5% unless otherwise noted.

PARAMETERS	MIN.	TYP.	MAX.	UNITS	CONDITIONS
SP1490E/1491E DRIVER					
DC Characteristics					
Differential Output Voltage	3.5		V_{CC}	Volts	Unloaded; R = ∞ ; *see figure 1*
Differential Output Voltage	2		V_{CC}	Volts	With Load; R = 50Ω; (RS422); *see figure 1*
Differential Output Voltage	1.5		V_{CC}	Volts	With Load; R = 27Ω; (RS485); *see figure 1*
Change in Magnitude of Driver Differential Output Voltage for Complimentary States			0.2	Volts	R = 27Ω or R = 50Ω; *see figure 1*
Driver Common-Mode Output Voltage			3	Volts	R = 27Ω or R = 50Ω; *see figure 1*
Input High Voltage	2.0			Volts	Applies to D
Input Low Voltage			0.8	Volts	Applies to D
Input Current			±10	µA	Applies to D
Driver Short-Circuit Current					
V_{OUT} = HIGH			±250	mA	-7V ≤ V_O ≤ +12V
V_{OUT} = LOW			±250	mA	-7V ≤ V_O ≤ +12V
SP1490E/1491E DRIVER					
AC Characteristics					
Maximum Data Rate	20			Mbps	
Driver Input to Output		30	40	ns	$t_{R/F}$; R_{DIFF} = 54Ω, C_{L1} = C_{L2} = 100pF; *see figures 3 and 6*
Driver Input to Output		30	40	ns	$t_{R/F}$; R_{DIFF} = 54Ω, C_{L1} = C_{L2} = 100pF; *see figures 3 and 6*
Driver Skew			5	ns	*see figures 3 and 6,* $t_{R/F} = \lvert t_{DPLH} - t_{DPHL} \rvert$
Driver Rise or Fall Time		8	20	ns	From 10% to 90%; R_{DIFF} = 54Ω, C_{L1} = C_{L2} = 100pF; *see figures 3 and 6* $t_{R/F}$
SP1491E only					
Driver Enable to Output High		20	70	ns	C_{L1} = C_{L2} = 100pF; *see figures 4 and 7;* S_2 closed
Driver Enable to Output Low		40	70	ns	C_{L1} = C_{L2} = 100pF; *see figures 4 and 7;* S_1 closed
Driver Disable Time from Low		40	70	ns	C_{L1} = C_{L2} = 100pF; *see figures 4 and 7;* S_1 closed
Driver Disable Time from High		40	70	ns	C_{L1} = C_{L2} = 100pF; *see figures 4 and 7;* S_2 closed

© Copyright 2004 Sipex Corporation

T_{MIN} to T_{MAX} and V_{CC} = 5V ± 5% unless otherwise noted.

SP1490E/1491E RECEIVER					
DC Characteristics					
Differential Input Threshold	0.2		+0.2	Volts	-7V ≤ V_{CM} ≤ 12V
Input Hysteresis		70		mV	V_{CM} = 0V
Output Voltage High	3.5			Volts	I_O = -4mA, V_{ID} = +200mV
Output Voltage Low			0.4	Volts	I_O = +4mA, V_{ID} = -200mV
Input Resistance	12	15		kΩ	-7V ≤ V_{CM} ≤ 12V (1 unit load)
Input Current (A, B); V_{IN} = 12V			±1.0	mA	V_{IN} = 12V
Input Current (A, B); V_{IN} = -7V			-0.8	mA	V_{IN} = -7V
Short-Circuit Current			85	mA	0V ≤ V_O ≤ V_{CC}
PARAMETERS	**MIN.**	**TYP.**	**MAX.**	**UNITS**	**CONDITIONS**
SP1490E/1491E RECEIVER					
AC Characteristics					
Maximum Data Rate	20			Mbps	
Receiver Input to Output	20	45	50	ns	t_{PLH}; R_{DIFF} = 54Ω, C_{L1} = C_{L2} = 100pF; *Figures 3 & 8*
Receiver Input to Output	20	45	50	ns	t_{PHL}; R_{DIFF} = 54Ω, C_{L1} = C_{L2} = 100pF; *Figures 3 & 8*
Diff. Receiver Skew $\|t_{PLH}-t_{PHL}\|$		5	10	ns	R_{DIFF} = 54Ω; C_{L1} = C_{L2} = 100pF;
Receiver Tplh/Tphl		40	70	ns	
POWER REQUIREMENTS					
Supply Voltage	+4.75		+5.25	Volts	
Supply Current		900		µA	
ENVIRONMENTAL AND MECHANICAL					
Operating Temperature					
Commercial (_C_)	0		+70	°C	
Industrial (_E_)	-40		+85	°C	
Storage Temperature	-65		+150	°C	
Package					
Plastic DIP (_S_)					
NSOIC (_N)					

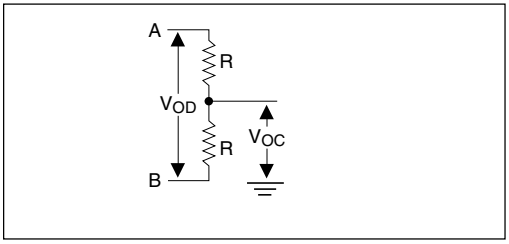

Figure 1. Driver DC Test Load Circuit

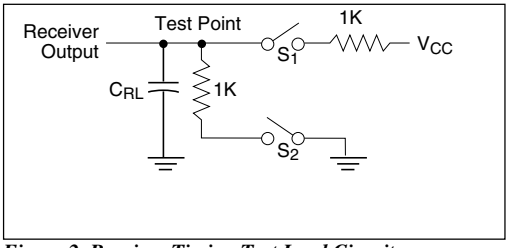

Figure 2. Receiver Timing Test Load Circuit

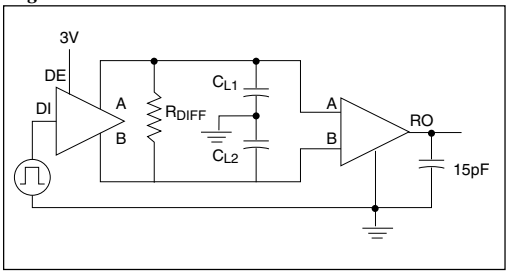

Figure 3. Driver/Receiver Timing Test Circuit

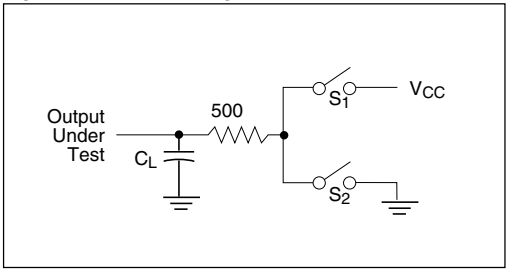

Figure 4. Driver Timing Test Load #2 Circuit

 © Copyright 2004 Sipex Corporation

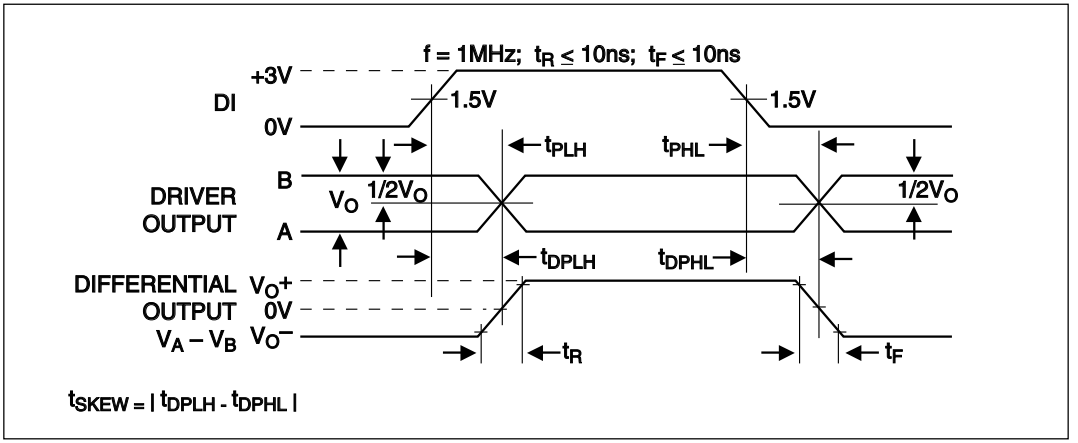

Figure 6. Driver Propagation Delays

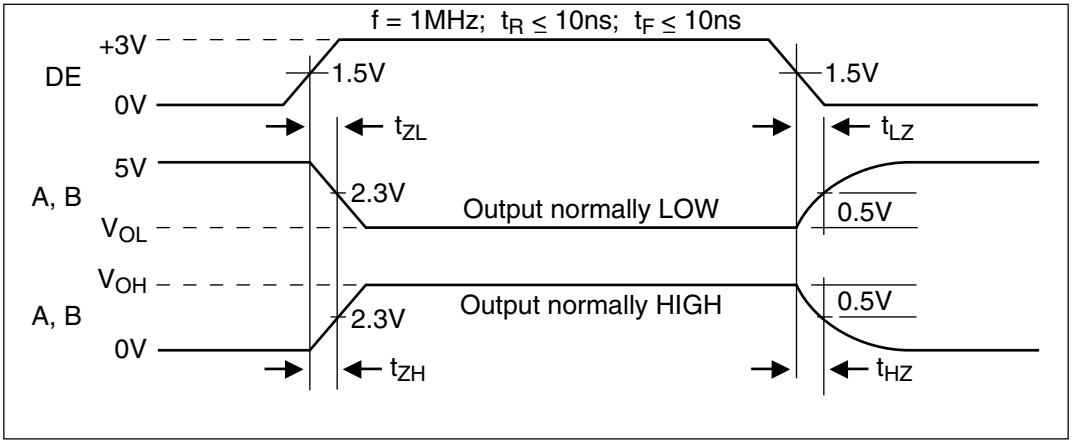

Figure 7. Driver Enable and Disable Times SP1491E only

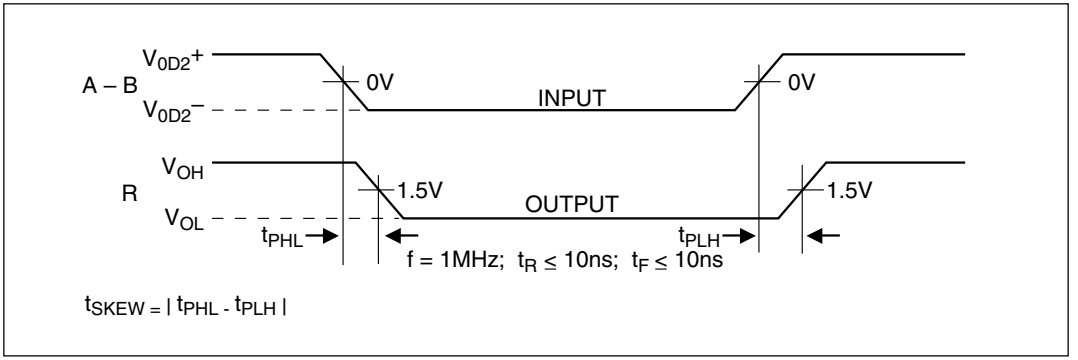

Figure 8. Receiver Propagation Delays

 © Copyright 2004 Sipex Corporation

The **SP1490E** and **SP1491E** are full-duplex differential transceivers that meet the requirements of RS-485 and RS-422. Fabricated with a **Sipex** proprietary BiCMOS process, both products require a fraction of the power of older bipolar designs.

The RS-485 standard is ideal for multi-drop applications or for long-distance interfaces. RS-485 allows up to 32 drivers and 32 receivers to be connected to a data bus, making it an ideal choice for multi-drop applications. Since the cabling can be as long as 4,000 feet, RS-485 transceivers are equipped with a wide (-7V to +12V) common mode range to accommodate ground potential differences. Because RS-485 is a differential interface, data is virtually immune to noise in the transmission line.

Driver...

The drivers for both the **SP1490E** and **SP1491E** have differential outputs. The typical voltage output swing with no load will be 0 volts to +5 volts. With worst case loading of 54Ω across the differential outputs, the driver can maintain greater than 1.5V voltage levels.

INPUTS		OUTPUTS	
DE SP1491E only	DI	Y	Z
1 1 0	1 0 x	1 0 z	0 1 z

Transmit Function Truth Table

The driver of the **SP1491E** has a driver enable control line which is active high. A logic high on DE (pin 4) of the **SP1491E** will enable the differential driver outputs. A logic low on DE (pin 4) of the **SP1491E** will tri-state the driver outputs. The **SP1490E** does not have a driver enable.

Receiver...

The receivers for both the **SP1490E** and **SP1491E** have differential inputs with an input sensitivity as low as ±200mV. Input impedance of the receivers is typically 15KΩ (12KΩ minimum). A wide common mode range of -7V to +12V allows for large ground potential differences between systems. The receivers for both the **SP1490E** and **SP1491E** are equipped with the fail-safe feature. Fail-safe guarantees that the receiver output will be in a high state when the input is left unconnected and floating.

The receiver of the **SP1491E** has a receiver enable control line which is active low. A logic low on REB (pin 3) of the **SP1491E** will enable the differential receiver. A logic high on REB (pin 3) of the **SP1491E** will tri-state the receiver.

INPUTS		OUTPUTS
RE SP1491E only	A-B	R
0 0 0 1	+0.2V -0.2V open x	1 0 1 z

Recieve Function Truth Table

 © Copyright 2004 Sipex Corporation

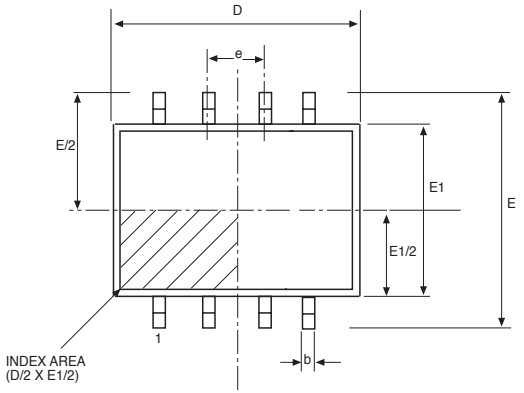

TOP VIEW

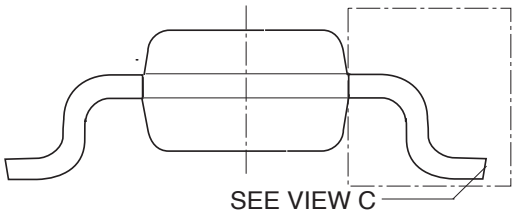

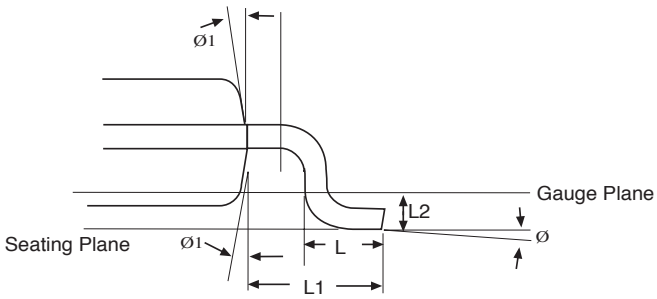

VIEW C

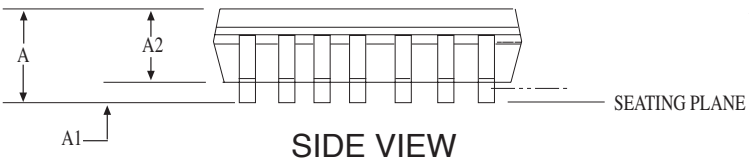

SIDE VIEW

8 Pin NSOIC (JEDEC MS-012, AA - VARIATION)	DIMENSIONS Minimum/Maximum (mm)		
COMMON HEIGHT DIMENSION			
SYMBOL	MIN	NOM	MAX
A	1.35	-	1.75
A1	0.10	-	0.25
A2	1.25	-	1.65
b	0.31	-	0.51
c	0.17	-	0.25
D	4.90 BSC		
E	6.00 BSC		
E1	3.90 BSC		
e	1.27 BSC		
L	0.40	-	1.27
L1	1.04 REF		
L2	0.25 BSC		
Ø	0º	-	8º
Ø1	5º	-	15º

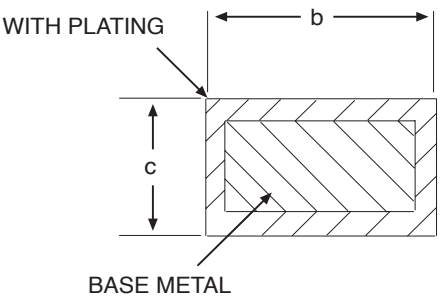

CONTACT AREA

PACKAGE: 8 PIN NSOIC

(Narrow refers to symbol E1)

 © Copyright 2004 Sipex Corporation

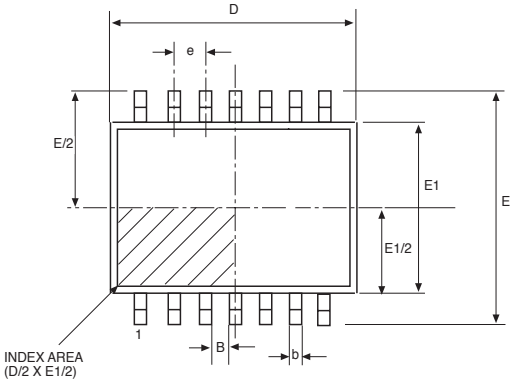

TOP VIEW

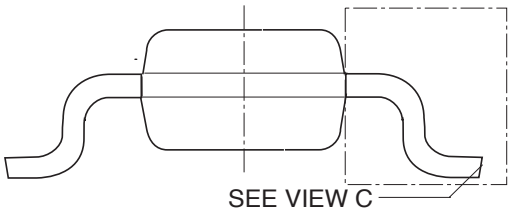

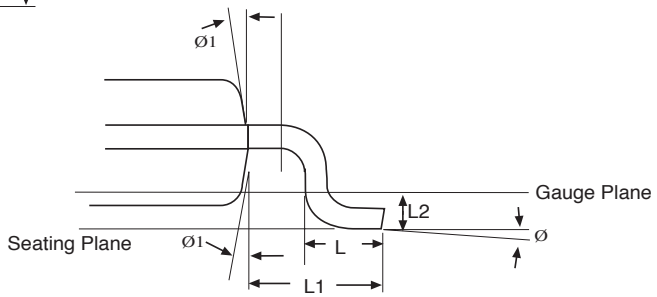

VIEW C

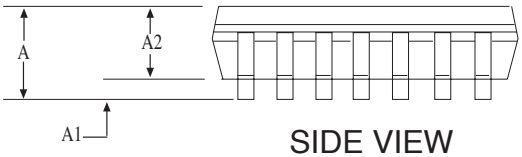

SIDE VIEW

14 Pin NSOIC (JEDEC MS-012, AB - VARIATION)	DIMENSIONS Minimum/Maximum (mm)		
COMMON HEIGHT DIMENSION			
SYMBOL	MIN	NOM	MAX
A	1.35	-	1.75
A1	0.10	-	0.25
A2	1.25	-	1.65
b	0.31	-	0.51
c	0.17	-	0.25
D	8.65 BSC		
E	6.00 BSC		
E1	3.90 BSC		
e	1.27 BSC		
L	0.40	-	1.27
L1	1.04 REF		
L2	0.25 BSC		
Ø	0º	-	8º
Ø1	5º	-	15º

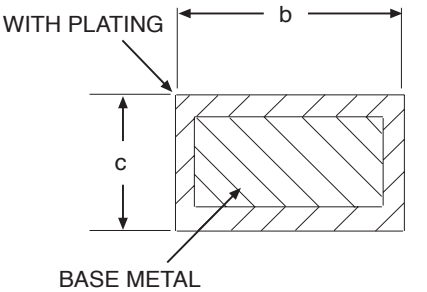

CONTACT AREA

14 PIN NSOIC

(Narrow refers to symbol E1)

 © Copyright 2004 Sipex Corporation

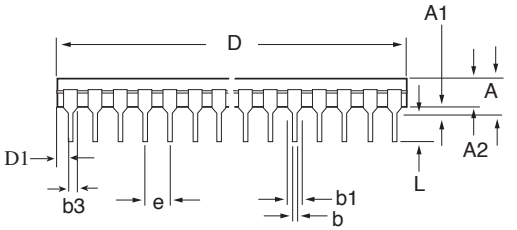

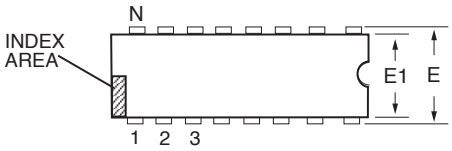

8 PIN PDIP JEDEC MS-001 (BA) Variation	Dimensions in (mm)		
	MIN	NOM	MAX
A	-	-	.210
A1	.015	-	-
A2	.115	.130	.195
b	.014	.018	.022
b2	.045	.060	.070
b3	.030	.039	.045
c	.008	.010	.014
D	.355	.365	.400
D1	.005	-	-
E	.300	.310	.325
E1	.240	.250	.280
e	.100 BSC		
eA	.300 BSC		
eB	-	-	.430
L	.115	.130	.150

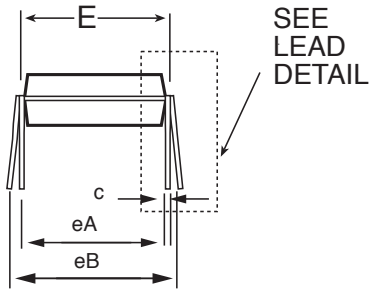

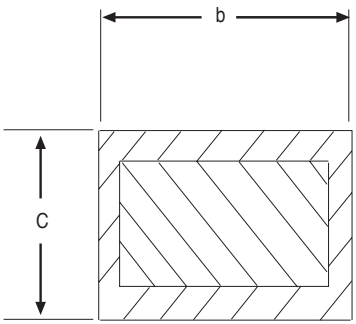

8 pin PDIP

 © Copyright 2004 Sipex Corporation

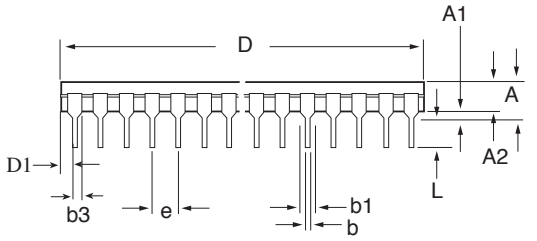

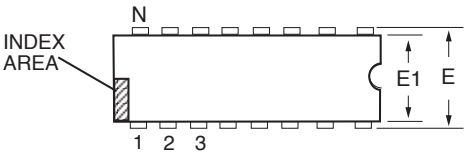

14 PIN PDIP JEDEC MS-001 (AA) Variation	Dimensions in (mm)		
	MIN	NOM	MAX
A	-	-	.210
A1	.015	-	-
A2	.115	.130	.195
b	.014	.018	.022
b2	.045	.060	.070
b3	.030	.039	.045
c	.008	.010	.014
D	.735	.750	.775
D1	.005	-	-
E	.300	.310	.325
E1	.240	.250	.280
e	.100 BSC		
eA	.300 BSC		
eB	-	-	.430
L	.115	.130	.150

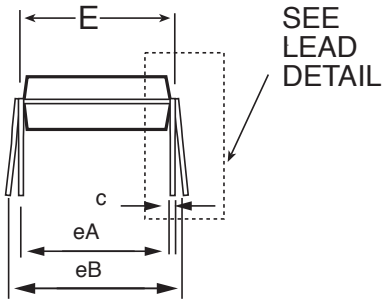

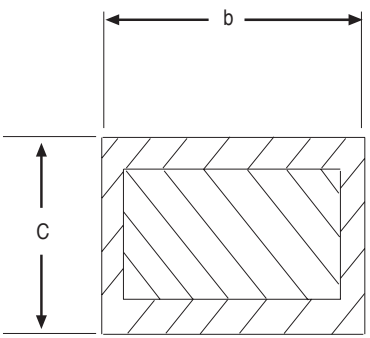

14 pin PDIP

 © Copyright 2004 Sipex Corporation

ORDERING INFORMATION

Part Number	TopMark	Temperature Range	Package
SP1490ECN.	1490ECNYYWW	0˚C to +70˚C	8-Pin NSOIC
SP1490ECN/TR.	1490ECNYYWW	0˚C to +70˚C	8-Pin NSOIC
SP1490EEN.	SP1490EENYYWW	-40˚C to +85˚C	8-Pin NSOIC
SP1490EEN/TR.	SP1490EENYYWW	-40˚C to +85˚C	8-Pin NSOIC
SP1490ECP.	SP1490ECPYYWW	0˚C to +70˚C	8-Pin PDIP
SP1490EEP.	SP1490EEPYYWW	-40˚C to +85˚C	8-Pin PDIP
SP1491ECN.	SP1491ECNYYWW	0˚C to +70˚C	14-Pin NSOIC
SP1491ECN/TR.	SP1491ECNYYWW	0˚C to +70˚C	14-Pin NSOIC
SP1491EEN.	SP1491EENYYWW	-40˚C to +85˚C	14-Pin NSOIC
SP1491EEN/TR.	SP1491EENYYWW	-40˚C to +85˚C	14-Pin NSOIC
SP1491ECP.	SP1491ECPYYWW	0˚C to +70˚C	14-Pin PDIP
SP1491EEP.	SP1491EEPYYWW	-40˚C to +85˚C	14-Pin PDIP

/TR = Tape and Reel

Pack quantity is 2500 for Narrow SOIC.

REVISION HISTORY

DATE	REVISION	DESCRIPTION
02/09/04	A	Production Release.
04/14/04	B	Included 8 Pin NSOIC package spec
05/18/04	C	Added Topmark information. Removed PDIP package option.
05/11/05	D	Removed Preliminary status from front page.

Sipex Corporation

ANALOG EXCELLENCE

Sipex Corporation

Headquarters and
Sales Office
233 South Hillview Drive
Milpitas, CA 95035
TEL: (408) 934-7500
FAX: (408) 935-7600

Sipex Corporation reserves the right to make changes to any products described herein. Sipex does not assume any liability arising out of the application or use of any product or circuit described hereing; neither does it convey any license under its patent rights nor the rights of others.