SP1006 Series 25pF 30kV Unidirectional Discrete TVS

RoHS Pb GREEN

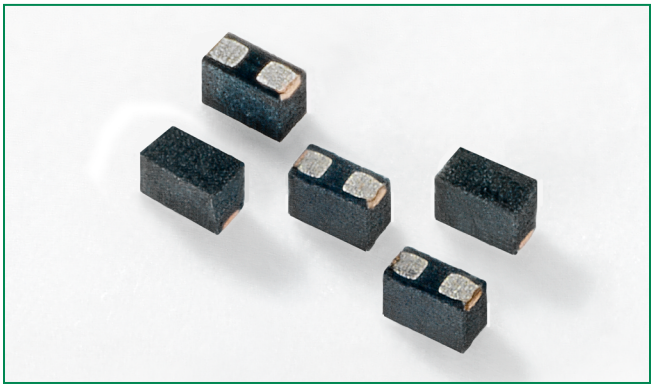

Pinout



Functional Block Diagram



Additional Information

Datasheet | **Resources** | **Samples**

Description

Zener diodes fabricated in a proprietary silicon avalanche technology protect each I/O pin to provide a high level of protection for electronic equipment that may experience destructive electrostatic discharges (ESD). These robust diodes can safely absorb repetitive ESD strikes at ±30kV (contact discharge, IEC 61000-4-2) without performance degradation. Additionally, each diode can safely dissipate 5A of 8/20μs surge current (IEC 61000-4-5, 2nd Edition) with very low clamping voltages.

Features

- RoHS compliant and Lead-free
- ESD, IEC 61000-4-2, ±30kV contact, ±30kV air
- EFT, IEC 61000-4-4, 40A (5/50ns)
- Lightning, IEC 61000-4-5, 2nd Edition, 5A (8/20μs)
- Low leakage current of 0.5μA (MAX) at 5V
- Space efficient 0201 footprint)

Applications

- Mobile phones
- Smart phones
- PDAs
- Digital cameras
- Portable navigation devices
- Portable medical devices

Application Example

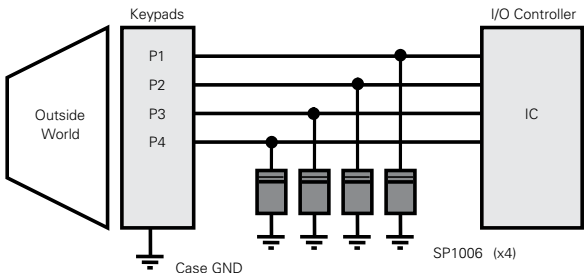

Life Support Note:

Not Intended for Use in Life Support or Life Saving Applications

The products shown herein are not designed for use in life sustaining or life saving applications unless otherwise expressly indicated.

© 2017 Littelfuse, Inc.
Specifications are subject to change without notice.
Revised: 02/23/17

TVS Diode Arrays (SPA® Diodes)

General Purpose ESD Protection - SP1006 Series

Absolute Maximum Ratings

Symbol	Parameter	Value	Units
I_{PP}	Peak Pulse Current (t_p=8/20µs)	5	A
T_{OP}	Operating Temperature	–40 to 125	°C
T_{STOR}	Storage Temperature	–55 to 150	°C

CAUTION: Stresses above those listed in "Absolute Maximum Ratings" may cause permanent damage to the device. This is a stress only rating and operation of the device at these or any other conditions above those indicated in the operational sections of this specification is not implied.

Thermal Information

Parameter	Rating	Units
Storage Temperature Range	–55 to 150	°C
Maximum Junction Temperature	150	°C
Maximum Lead Temperature (Soldering 30s)	260	°C

Electrical Characteristics (T_{OP}=25°C)

Parameter	Symbol	Test Conditions	Min	Typ	Max	Units
Reverse Standoff Voltage	V_{RWM}				6.0	V
Breakdown Voltage	V_{BR}	I_R=1mA (Pin 1 to 2)		7.8		V
Forward Voltage Drop	V_F	I_R=1mA (Pin 2 to 1)		0.8		V
Leakage Current	I_{LEAK}	V_R=5V		0.1	0.5	µA
Clamp Voltage[1]	V_C	I_{pp}=1A, t_p=8/20µs (Pin 1 to 2)		8.3		V
		I_{pp}=2A, t_p=8/20µs (Pin 1 to 2)		9.2		V
Dynamic Resistance	R_{DYN}	$(V_{C2} - V_{C1}) / (I_{PP2} - I_{PP1})$		0.9		Ω
ESD Withstand Voltage[1]	V_{ESD}	IEC 61000-4-2 (Contact Discharge)	±30			kV
		IEC 61000-4-2 (Air Discharge)	±30			kV
Diode Capacitance[1]	C_D	Reverse Bias=0V		25		pF
		Reverse Bias=2.5V		15		pF

Note: [1] Parameter is guaranteed by design and/or device characterization.

Capacitance vs. Reverse Bias

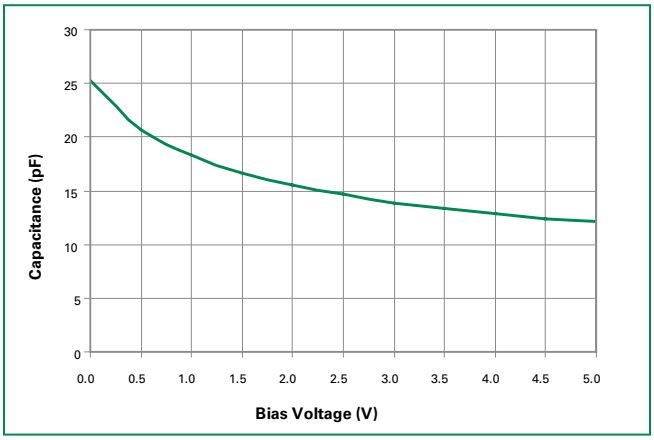

Pulse Waveform

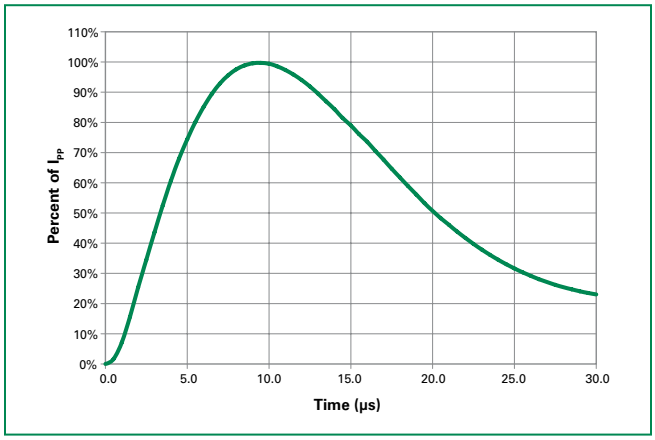

© 2017 Littelfuse, Inc.
Specifications are subject to change without notice.
Revised: 02/23/17

Clamping Voltage vs. I_{PP}

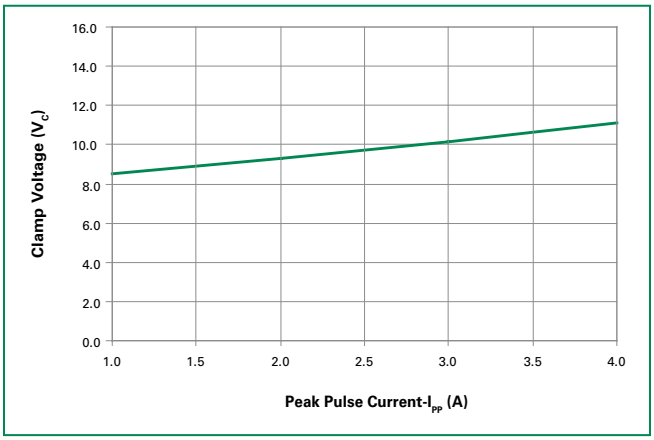

Soldering Parameters

Reflow Condition		Pb – Free assembly
Pre Heat	- Temperature Min ($T_{s(min)}$)	150°C
	- Temperature Max ($T_{s(max)}$)	200°C
	- Time (min to max) (t_s)	60 – 180 secs
Average ramp up rate (Liquidus) Temp (T_L) to peak		3°C/second max
$T_{S(max)}$ to T_L - Ramp-up Rate		3°C/second max
Reflow	- Temperature (T_L) (Liquidus)	217°C
	- Temperature (t_L)	60 – 150 seconds
Peak Temperature (T_P)		$260^{+0/-5}$ °C
Time within 5°C of actual peak Temperature (t_p)		20 – 40 seconds
Ramp-down Rate		6°C/second max
Time 25°C to peak Temperature (T_P)		8 minutes Max.

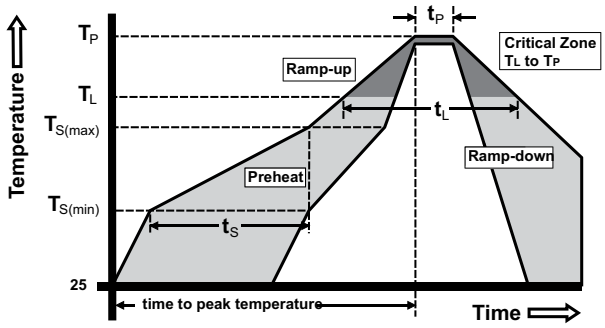

Package Dimensions — µDFN-2 (0201)

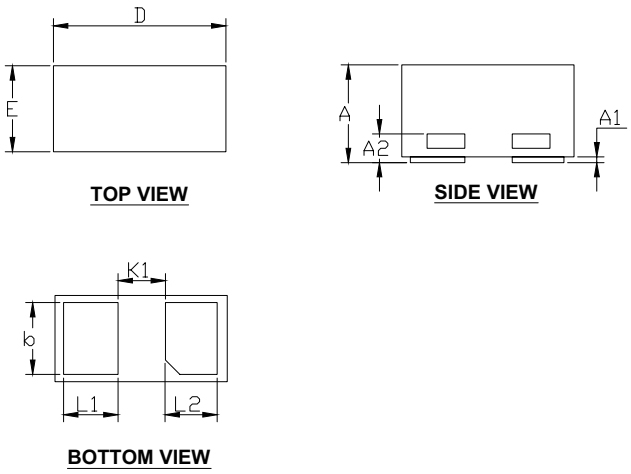

Package	µDFN-2 (0201)		
JEDEC	MO-236		
Symbol	Millimeters		
	Min	Nom	Max
A	0.28	0.30	0.32
A1	0.00	0.02	0.05
A2	0.05	0.10	0.15
b	0.20	0.25	0.30
D	0.55	0.60	0.65
E	0.25	0.30	0.35
L1	0.14	0.19	0.24
L2	0.13	0.18	0.23
K1	0.165 REF		

© 2017 Littelfuse, Inc.
Specifications are subject to change without notice.
Revised: 02/23/17

TVS Diode Arrays (SPA® Diodes)

General Purpose ESD Protection - SP1006 Series

Part Numbering System

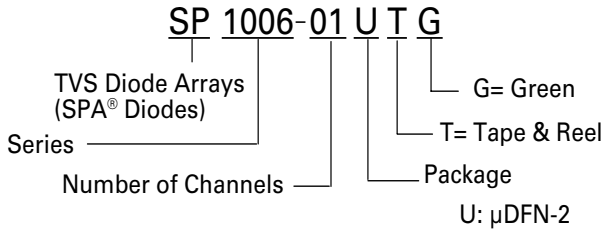

Part Marking System

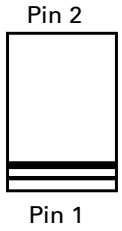

Product Characteristics

Lead Plating	Pre-Plated Frame
Lead Material	Copper Alloy
Lead Coplanarity	0.0004 inches (0.102mm)
Substitute Material	Silicon
Body Material	Molded Epoxy
Flammability	UL 94 V-0

Notes :
1. All dimensions are in millimeters
2. Dimensions include solder plating.
3. Dimensions are exclusive of mold flash & metal burr.
4. Blo is facing up for mold and facing down for trim/form, i.e. reverse trim/form.
5. Package surface matte finish VDI 11-13.

Ordering Information

Part Number	Package	Marking	Min. Order Qty.
SP1006-01UTG	µDFN-2	II	10000

Embossed Carrier Tape & Reel Specification — µDFN-2

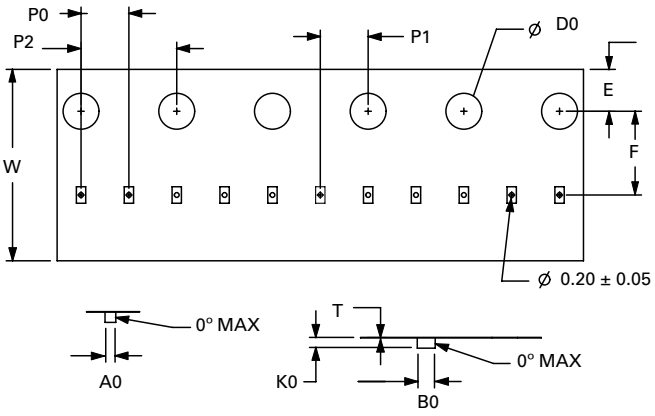

Symbol	Millimetres		Inches	
	Min	Max	Min	Max
A0	0.36	0.42	0.014	0.017
B0	0.66	0.72	0.026	0.028
D0	1.40	1.60	0.055	0.063
E	1.65	1.85	0.065	0.073
F	3.45	3.55	0.136	0.140
K0	0.39	0.45	0.015	0.018
P0	1.95	2.05	0.077	0.081
P1	1.95	2.05	0.077	0.081
P2	3.90	4.10	0.154	0.161
T	0.18	0.22	0.007	0.009
W	7.90	8.30	0.311	0.327

Disclaimer Notice - Information furnished is believed to be accurate and reliable. However, users should independently evaluate the suitability of and test each product selected for their own applications. Littelfuse products are not designed for, and may not be used in, all applications. Read complete Disclaimer Notice at www.littelfuse.com/disclaimer-electronics.

© 2017 Littelfuse, Inc.
Specifications are subject to change without notice.
Revised: 02/23/17