

MODEL: SP-1511S-2
PRODUCT: Dynamic Speaker
EDITION: A/2016

Soberton Inc.

THIS SPECIFICATION COVERS OUR PRODUCT OF DYNAMIC SPEAKER UNIT FOR MOBILE TELEPHONE USE

SPEAKER ELECTROACOUSTIC CHARACTERISTICS

	sound pressure level	83±3dB Spl @ 2KHZ 1.0V(Sine wave) 0.1m measured with baffler shown in Fig.1. (1CC BOX)
	resonance frequency (FO)	850±20%Hz @ 1Vrms. (In 1CC BOX)
	measuring diagram	Shown in Fig.1
	typical frequency response curve	Shown in Fig.2.
	rated noise power	0.7W (In 1CC Box)
	short-term max.power	1.0W (In 1CC Box)
	distortion	Less than 5% at 1KHz 1V
	operation test	Must be free of audible noise (buzzes and rattles) (200 ~ 3400Hz frequency range ,input level up to 2.37Vrms (In 1CC BOX))

GENERAL SPECIFICATIONS

	operating temperature range	-25°C ~ +65°C
	storage temperature range	-40°C ~ +75°C
	ac impedance	8.0Ω±15% (@2KHz 1Vrms)
	dimension	15 x 11 x 3.8 mm

TYPICAL FREQUENCY RESPONSE CURVE

FREQUENCY MEASURING CIRCUIT (SPEAKER MODE) (Fig.1)

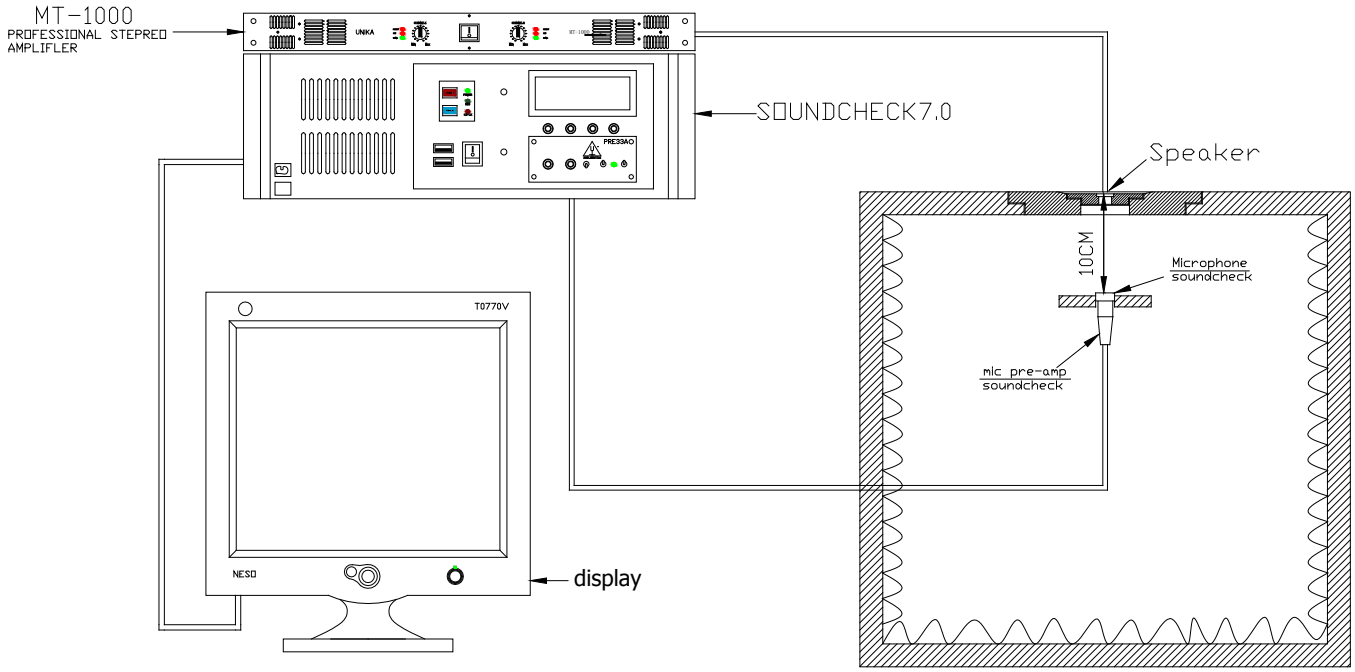

TYPICAL FREQUENCY RESPONSE CURVE (Continued)

TYPICAL FREQUENCY RESPONSE CURVE (SPEAKER MODE) (Fig.2)

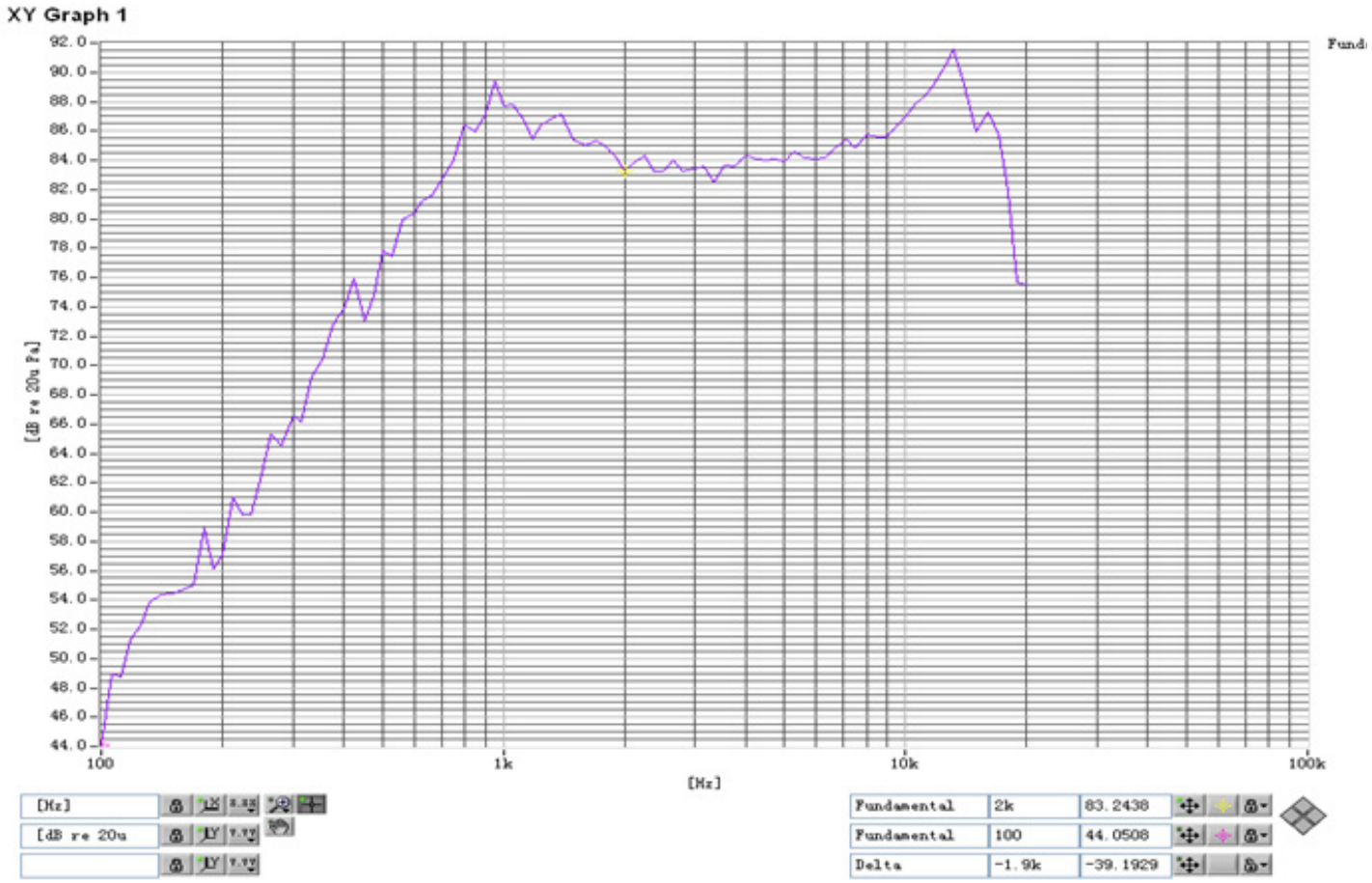

TEST CLIMATIC CONDITIONS

STANDARD TEST CONDITIONS

temperature	17~25°C
relative humidity	45%~80%(RH)
air pressure	860~1060 hPa

RELIABILITY TESTS

The sound pressure as specified shall neither deviate more than ±3dB from the initial value, nor have any significant damage after any of following testing.

HIGH TEMPERATURE TEST	
high temperature	+75±2°C
duration	96 hours
LOW TEMPERATURE TEST	
low temperature	-25±2°C
duration	96 hours
HEAT SHOCK TEST (See in Fig.3)	
high temperature	+75±2°C
low temperature	-40±2°C
changeover time	< 30 seconds
duration	1 hour
cycle	10
HUMIDITY TEST	
temperature	+40±2°C
relative humidity	90~95%
duration	48 hours
TEMPERATURE CYCLE TEST (See in Fig. 4)	
temperature	-40°C +75°C
duration	45 minutes 45 minutes
temperature gradient	1~3°C/min.
cycle	10
DROP TEST	
mounted with dummy set mass	100 g
height	1.5 m
cycle	6 (1 each plain) onto the concrete board
LOAD TEST	
noise signal	White noise (EIA filter)
input power	0.7W (1CC BOX) (2.37Vrms)
duration	96 hours

TEST METHOD

HEAT SHOCK TEST (Fig. 3)

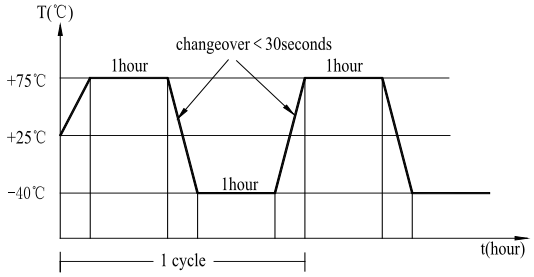

TEMP. CYCLE TEST (Fig. 4)

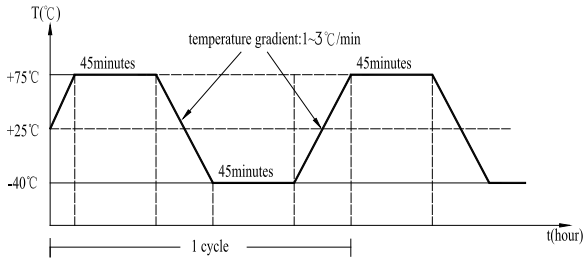

PRODUCT EXTERNAL VIEW AND DIMENSIONS (Fig. 5)

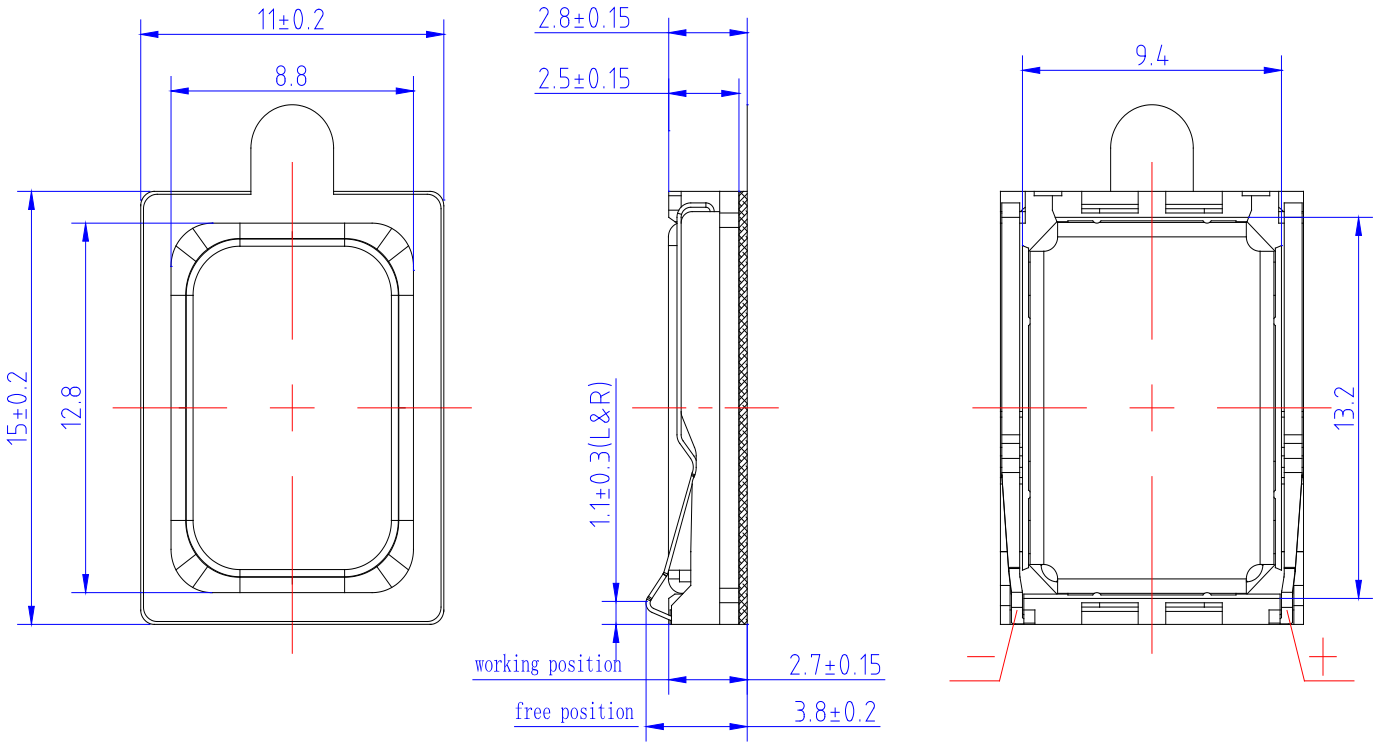

no	item	material	quantity
1	Magnet	Nd-Fe-B	1
2	U-Yoke	Iron	1
3	Pole Piece	Iron	1
4	Voice coil	Copper	1
5	Frame	PPA	1
6	Gasket	PE	1

PACKING

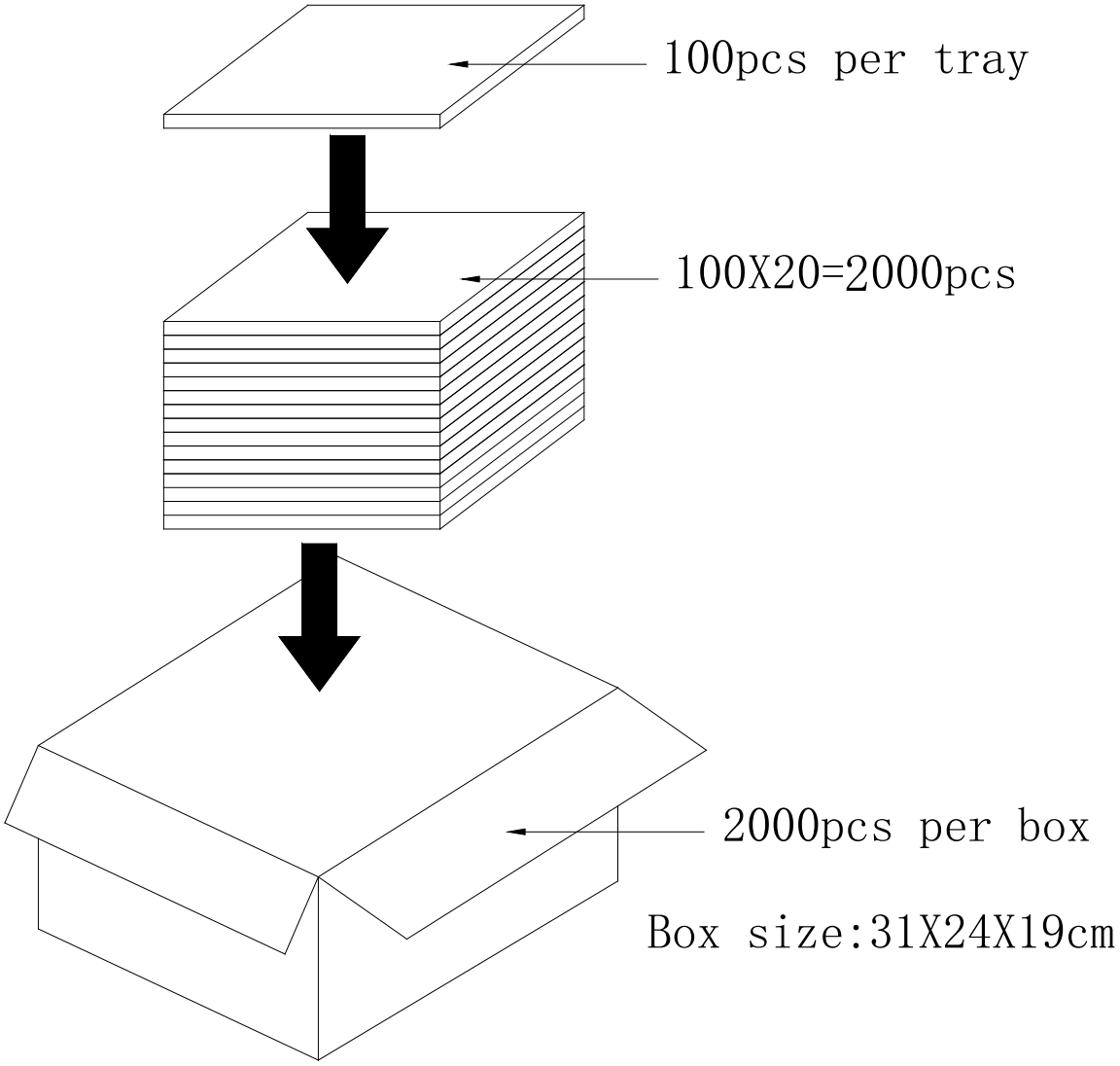
100pcs per tray
100X20=2000pcs
2000pcs per box
Box size:31X24X19cm