SOM-DB3500

Qseven Development Board

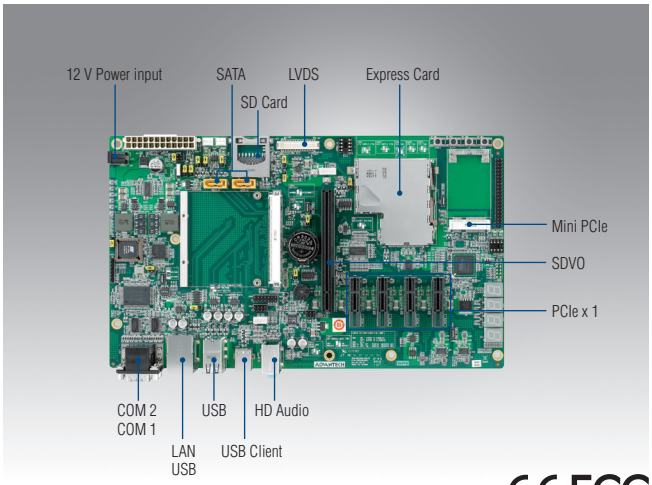

CE FCC

Features

- Supports Qseven CPU Module
- Supports 24-bit LVDS TFT Panel
- Supports 1 PCIe x16 slot for SDVO, 4 PCIe x1 slot
- Supports 2 SATA, 2 COMs, 1 RJ-45, 6 USB 2.0 (with 1 USB client)
- HD Audio Codec

Specifications

Compatible Modules		Advantech Qseven CPU Module Series (70 x 70 mm)
Display	SDVO	Supports one SDVO through PCIe x16 slot
	LCD	24-bit LVDS
Ethernet		1 x Giga LAN
Audio	Chipset	High Definition Audio
Expansion	SDVO Slot	1
	PCIe x 1 slot	4
	Express Card Socket	1
	SD/MMC	1
	Mini PCIe	1
I/O	USB	6 USB 2.0 (one is alternating with USB client)
	USB Client	1 (alternating with USB1)
	COM	2 COM ports
	SATA	2
	KB/MS	1
	System FAN	2
	I2C	1
Power	Power Type	ATX/AT modes
Environment	Operation	0 ~ 60° C (32 ~ 140° F)
	Operating Humidity	0% ~ 90% relative humidity, non-condensing
Physical Characteristics	Dimensions	293 x 172 mm (11.5" x 6.75")

All product specifications are subject to change without notice

Block Diagram

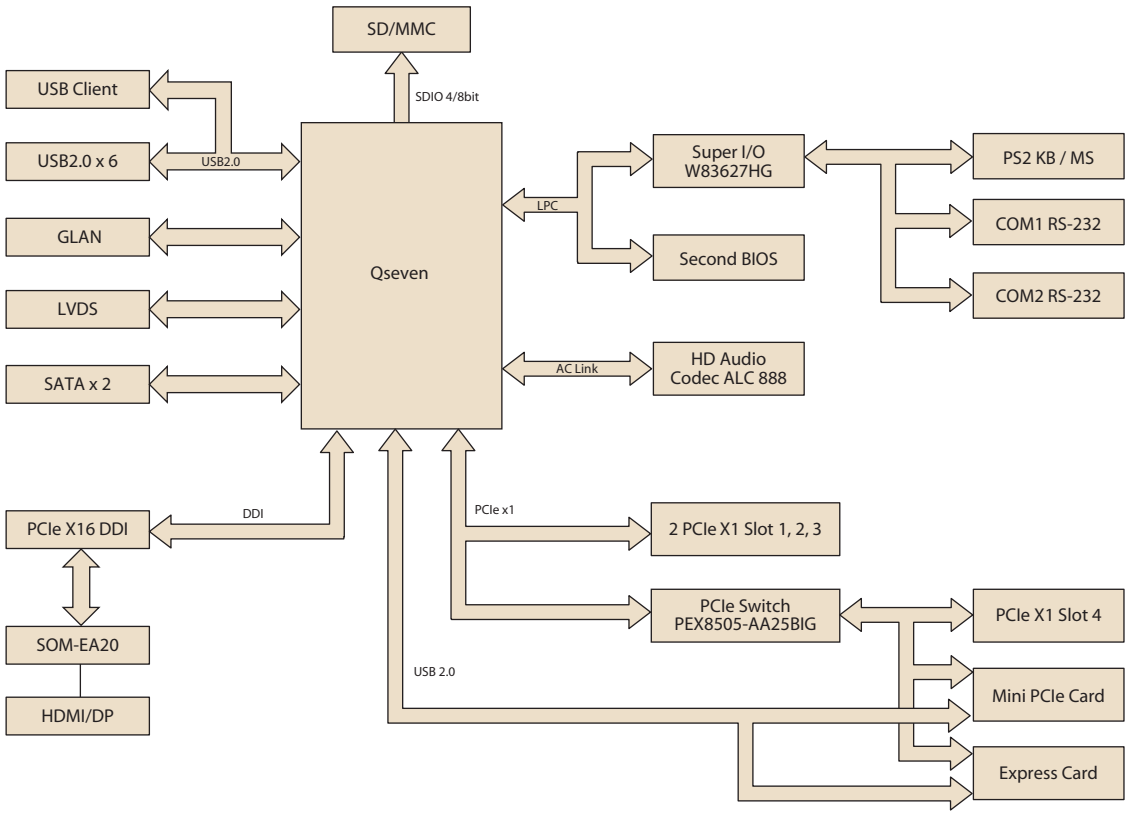

Ordering Information

Part No.	Description
SOMDB3500G01A1E-ES	Development board for Qseven CPU Module series

Packing List

Part No.	Description	Quantity
-	SOM-DB3500 development board	1
SOM-EA20	HDMI/DDI DisplayPort Riser card	1