Rev	AWO #	Description	Date	Appr
-		RELEASED	9/30/09	

APPROVED: _____

DATE: _____ TITLE: _____

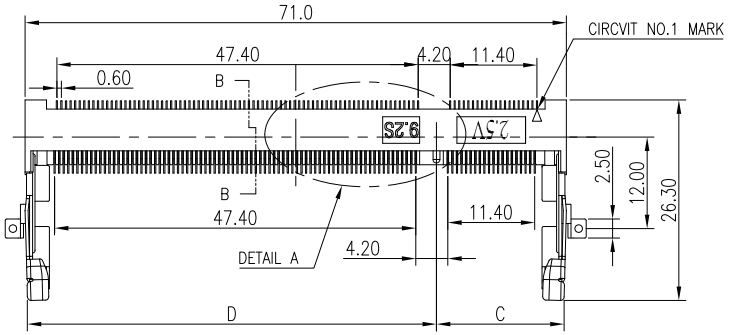

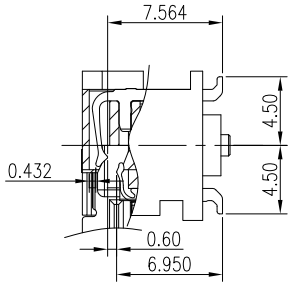

DETAIL:B–B
SCALE:2/1

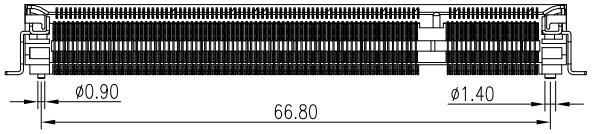

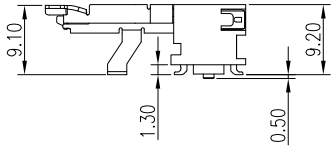

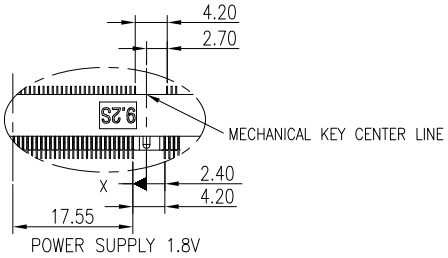

DETAIL A VOLTAGE OPTION

ADAM P/N		C	D
SOD-200-S-6-9.2	1.8V	17.67	52.77

SPECIFICATIONS:

Material:
Body: LCP, glass reinforced, rated UL 94V–0
Contacts: Brass, Gold plated.
Latch: Stainless, Tin plated.
Electrical:
Operating voltage: 25 VAC max
Current rating: 0.3 Amps max
Contact resistance: Initial 20 mohms Max.
Dielectric withstanding voltage: 250 VAC for 1 minute
Temperature Rating:
Operating temperature: –40°C to +85°C
Environmental:
Lead free, RoHS compliant.
Recommended soldering temp: 260°C for 5 sec

RoHS COMPLIANT

UNLESS OTHERWISE SPECIFIED
ALL DIMENSIONS ARE MM
TOLERANCES: EXCEPT AS NOTED

DIMENSIONS		ANGLES
.X	± .38	± 3°
.XX	± .25	
.XXX	± .20	

APPROVALS		DATE
DRAWN	DY	9/30/09
CHECKED		
APPROVED		

ADAM TECH
909 Rahway Avenue, Union, NJ 07083
Phone: 908-687-5000 Fax: 908-687-5710

TITLE: SO DIMM, 200 PIN DDR2 SOCKET, SMT
1.8V KEY, 9.2MM HEIGHT

SIZE	PART NO.	REV.
X	SOD-200-S-6-9.2	-

REF: S00131T | SCALE: NTS | SHEET 1 OF 2