Rev	AWO #	Description	Date	Appr
SEE SHT 1 OF 2 FOR REVISION				

APPROVED: _____

DATE: _____ TITLE: _____

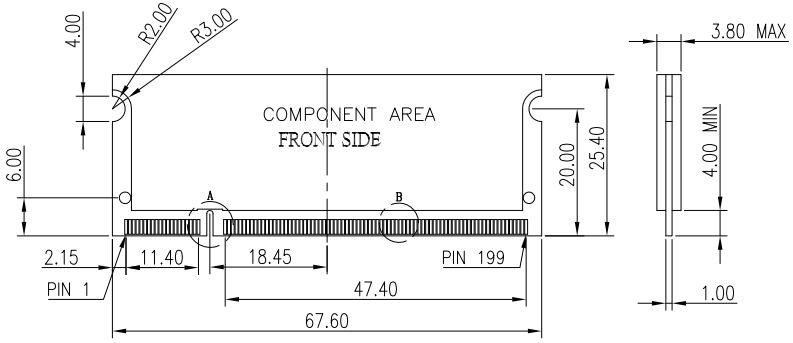

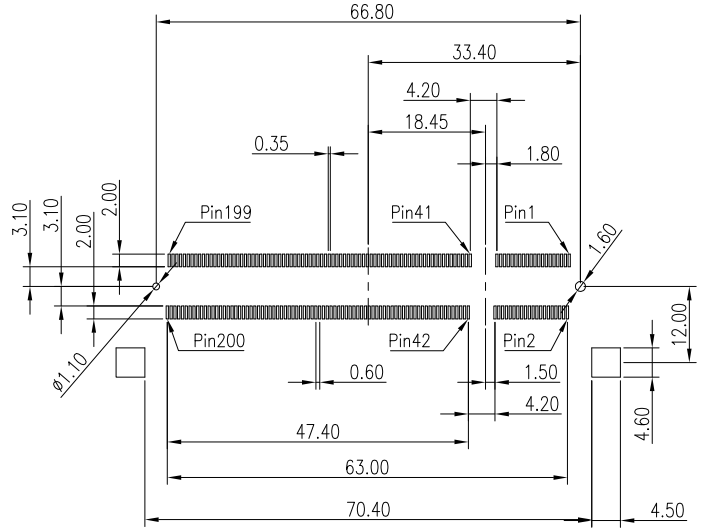

RECOMMENDED P.C.BOARD LAYOUT

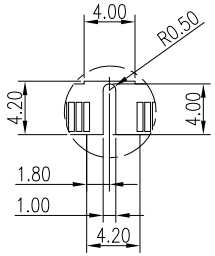

DETAIL A

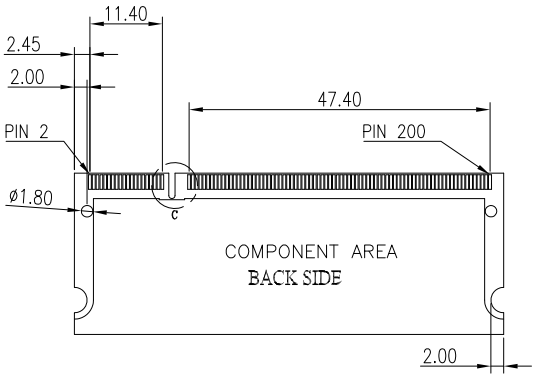

RECOMMENDED MODULE CONFIGURATION.

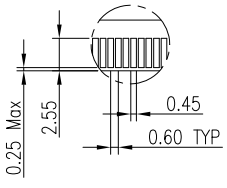

DETAIL B

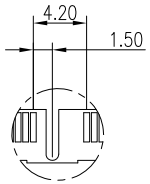

DETAIL C

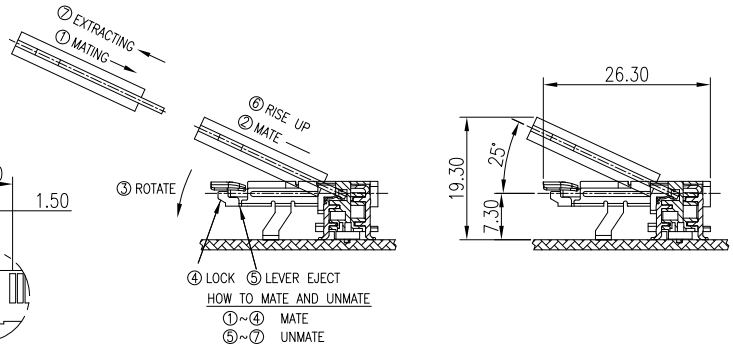

UNLESS OTHERWISE SPECIFIED
ALL DIMENSIONS ARE MM
TOLERANCES: EXCEPT AS NOTED

INCHES		HOLES	
.X	± .10	Ø.X	±.10
.XX	± .020	Ø.XX	±.015
.XXX	± .015	Ø.XXX	±.010

APPROVALS		DATE
DRAWN	DY	9/30/09
CHECKED		
APPROVED		

ADAM TECH
909 Rahway Avenue, Union, NJ 07083
Phone: 908-687-5000 Fax: 908-687-5710

TITLE: SO DIMM, 200 PIN DDR2 SOCKET, SMT
1.8V KEY, 9.2MM HEIGHT

SIZE	PART NO.	REV.
X	SOD-200-S-6-9.2	-

REF: S00131T | SCALE: NTS | SHEET 2 OF 2