DIMENSIONS						
REF.	mm			inch		
	MIN.	TYP.	MAX.	MIN.	TYP.	MAX.
A	1.35		1.75	0.053		0.069
A1	0.10		0.25	0.04		0.010
A2	1.10		1.65	0.043		0.065
B	0.33		0.51	0.013		0.020
C	0.19		0.25	0.007		0.010
D	4.80		5.00	0.189		0.197
E	3.80		4.00	0.150		0.157
e		1.27			0.050	
H	5.80		6.20	0.228		0.244
h	0.25		0.50	0.010		0.020
L	0.40		1.27	0.016		0.050
k	8° (max.)					
ddd			0.1			0.04

PACKAGE AND PACKING INFORMATION

8-LEAD SMALL OUTLINE PACKAGE

Weight: not available

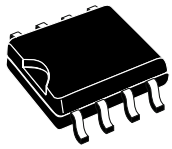

SO-8

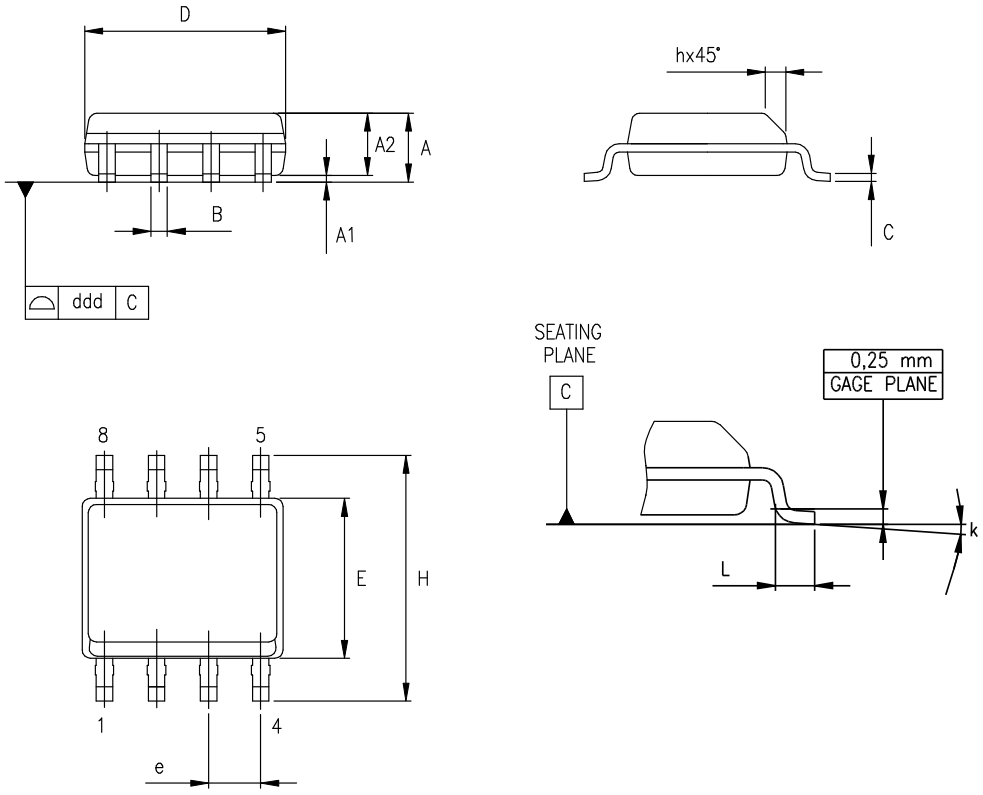

TUBE SHIPMENT INFORMATION

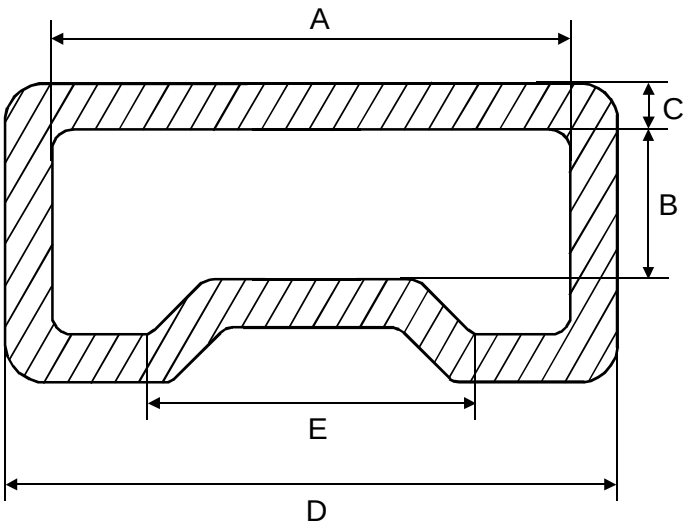

TUBE MECHANICAL DATA		
	mm.	inch
A	6.60 ±0.10	0.260 ±0.004
B	1.90 ±0.10	0.075 ±0.004
C	0.60 ±0.10	0.024 ±0.004
D	7.80 ±0.10	0.307 ±0.004
E	4.30 ±0.10	0.169 ±0.004

BASE QUANTITY	100 pcs.
BULK QUANTITY	2000 pcs.

TAPE & REEL SHIPMENT INFORMATION

TAPE SPECIFICATIONS

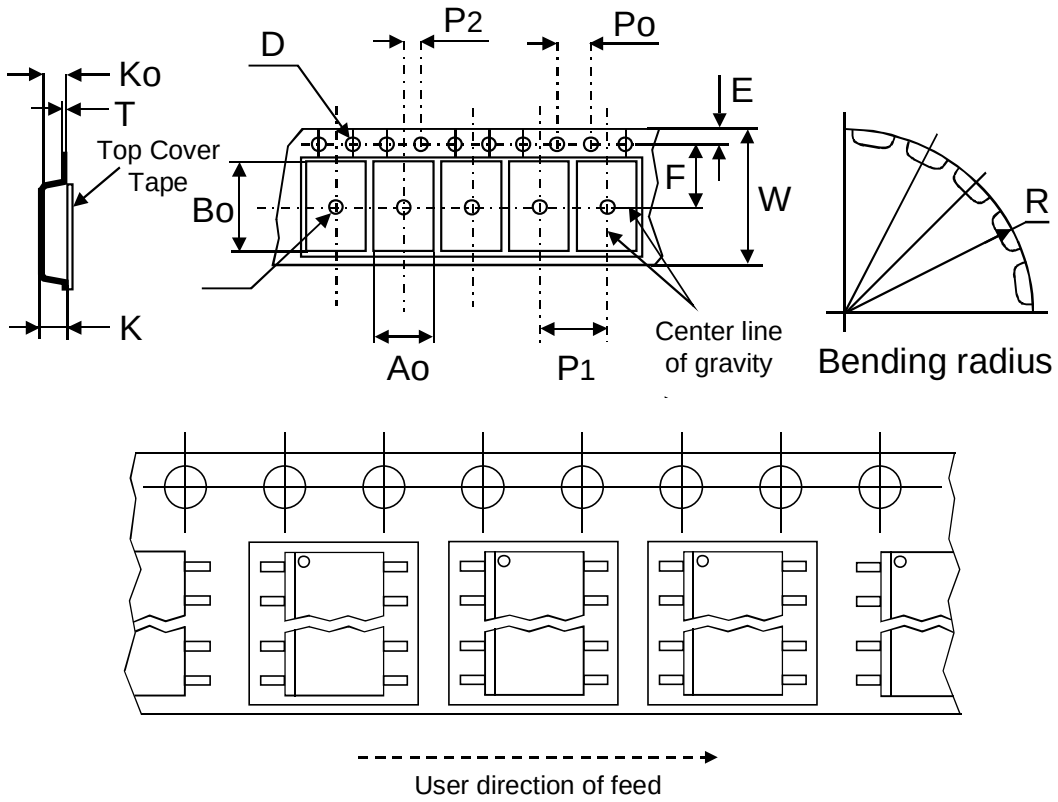

TAPE MECHANICAL DATA		
	mm.	inch
D	1.50 +0.1/0	0.059 +0.004/0
E	1.75 ±0.1	0.069 ±0.004
Po	4.00 ±0.1	0.157 ±0.004
T max.	0.40	0.016
D1 min.	1.50	0.059
F	5.5 ±0.05	0.217 ±0.002
K max.	4.50	0.177
P2	2.00 ±0.05	0.079 ±0.002
R	30	1.181
W	12.00 ±0.30	0.472 ±0.012
P1	8.00	0.315
Ao, Bo, Ko	0.05 min to 0.65 max.	0.002 min to 0.026 max.

BASE QUANTITY	2500 pcs.
BULK QUANTITY	2500 pcs.

TAPE & REEL SHIPMENT INFORMATION

REEL SPECIFICATIONS

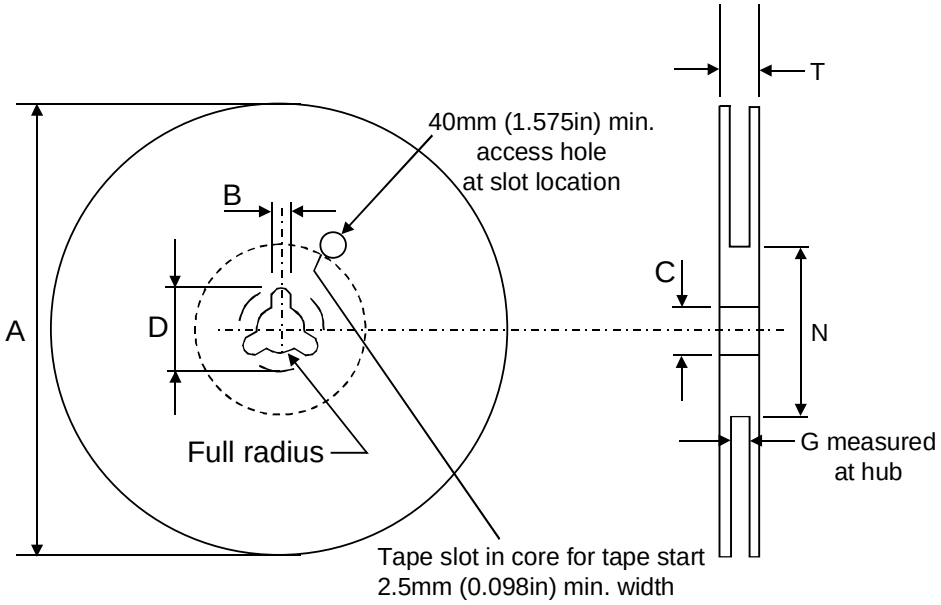

REEL MECHANICAL DATA		
	mm.	inch
Tape size	12.0 ±0.30	0.472 ±0.012
A max.	330.0	12.992
B min.	1.5	0.059
C	13.0 ±0.20	0.512 ±0.008
D min.	20.2	0.795
N min.	60	2.362
G	12.4 +2/-0	0.488 +0.079/-0
T max.	18.4	0.724

FOOTPRINT RECOMMENDED DATA

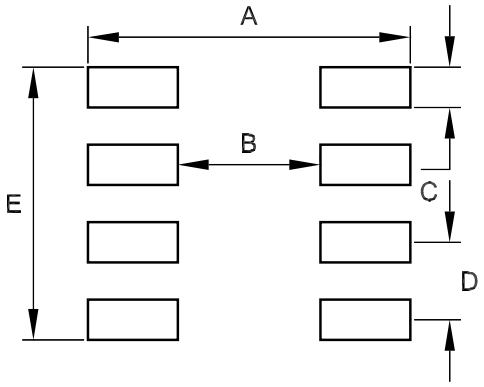

FOOTPRINT DATA		
	mm.	inch
A	6.8	0.268
B	4.4	0.173
C	0.58	0.023
D	1.27	0.050
E	4.39	0.173