======== CONTENTS ========

1. INTRODUCTION 3

2. FEATURES 3

3. BLOCK DIAGRAM 4

4. PIN ASSIGNMENT 4

5. FUNCTION DESCRIPTIONS 5

5.1 OSCILLATOR 5
5.2 ROM 5
5.3 RAM 5
5.4 POWER DOWN MODE 5
5.5 SAMPLING RATE COUNTERS 5
5.6 AUTO REPETITION 6
5.7 I/O PORTS 6
5.8 IR FUNCTION 7
5.9 8-BIT DAC 7
5.10 8-BIT PWM 8

6. ABSOLUTE MAXIMUM RATING 9

7. ELECTRICAL CHARACTERISTICS 9

8. ROSC PERFORMANCE 10

9. APPLICATION CIRCUIT 11

10. BONDING PAD 13

AMENDENT HISTORY

Version	Date	Description
Ver 1.1	April 24, 2003	First issue
Ver 1.2	August 26, 2003	**2. *FEATURES*** : Modify Power supply is 2.4~5.5V **5. *FUNCTION Description*** **5.1 *Oscillator* :** Modify ROSC R=100KΩ **7. *Electrical Characteristic*** : Add Current (ROSC&XTAL Mode), and Operating Voltage Max = 5.5V **8. *ROSC Performance*** : Add ROSC Performance **9. *Application Circuit*** : Add Note about C1 close to VDD pin of Chip

1. INTRODUCTION

SNC678 is a 42 seconds single chip 4-channel voice synthesizer IC which contains 24 I/O pins and a tiny controller. By programming through the tiny controller, users' applications including section combination, trigger modes, output status, high performance melody, multiple voices, and other logic functions can be implemented.

2. FEATURES

- Single power supply 2.4V – 5.5V
- Built in a tiny controller
- 42 seconds voice capacity are provided
- Six 4-bit I/O ports are provided
- 256*4 bits RAM are provided
- Maximum 64k program ROM is provided
- 132K *12 ROM size is provided for voice data and program
- Readable ROM code data
- Built in a high quality speech synthesizer
- Four independent voice channels
- Adaptive playing speed from 4k-40kHz is provided for all 4 channels individually
- Automatic repetition for every channel
- A 6-bit*8-bit Multiplier is embed to modulate the volume of synthesized voices
- Two digital mixers (with saturation control) are provided
- Built in a PWM Direct Drive circuit and a current output DA converters.
- Built in 15 levels PWM output volume control.
- System clock: 8M Hz (RC-type or Crystal Option)
- Low Voltage Reset

3. Block Diagram

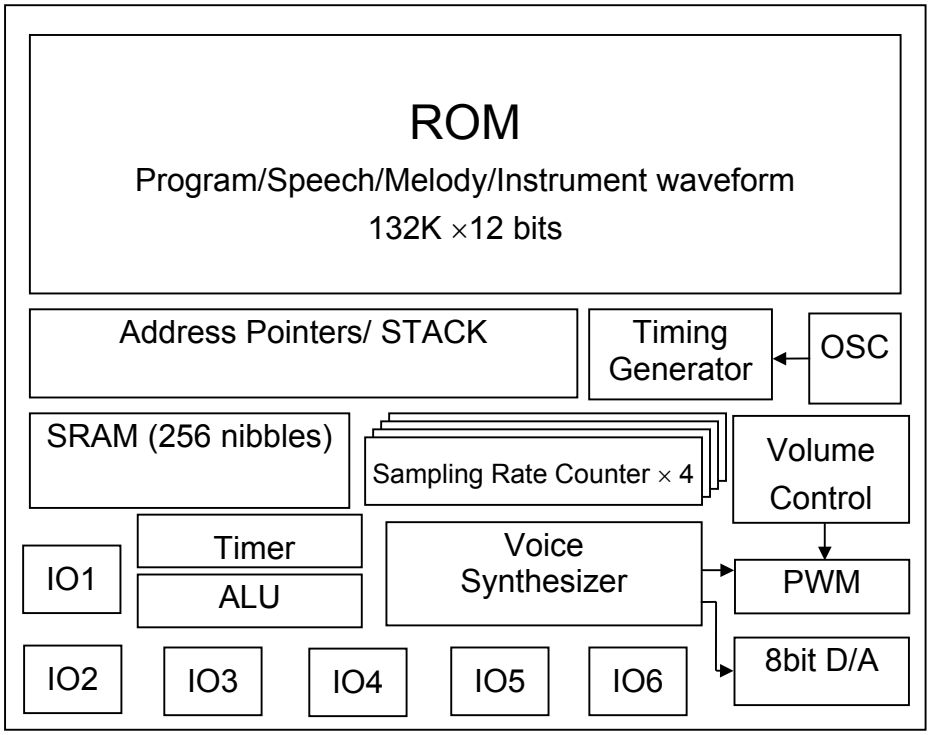

4. PIN ASSIGNMENT

Symbol	I/O	Function Description
P13 ~ P10	I/O	Bit3 ~ Bit0 of I/O port 1
P23 ~ P20	I/O	Bit3 ~ Bit0 of I/O port 2
P33 ~ P30	I/O	Bit3 ~ Bit0 of I/O port 3
P43 ~ P40	I/O	Bit3 ~ Bit0 of I/O port 4
P53 ~ P50	I/O	Bit3 ~ Bit0 of I/O port 5
P63 ~ P60	I/O	Bit3 ~ Bit0 of I/O port 6
VDD	P	Positive power supply
GND	P	Negative power supply
XIN	I	Crystal In
RST	I	Chip Reset (Active high)
XOUT/OSC	O	Crystal Out / Rosc In
CKSEL	I	Clock type select (Internal pull low) 'L' or floating → RC oscillator 'H' →Crystal
BUO1/VO1	O	Positive Output of PWM or DA1
BUO2/VO2	O	Negative Output of PWM or DA2

5. FUNCTION DESCRIPTIONS

5.1 Oscillator

SNC678 accepts crystal oscillator / ceramic resonator or RC type oscillator (selected by pin CKSEL) for system clock. The typical circuit diagrams for oscillator are listed as follows.

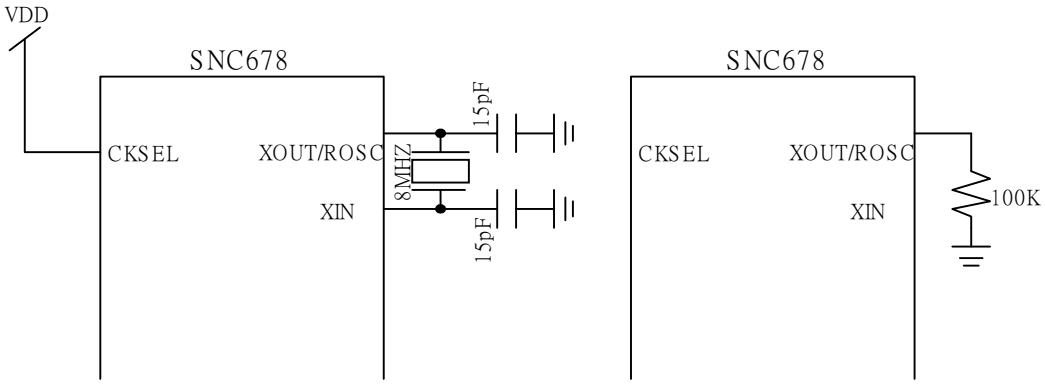

8MHZ Crystal　　8M Rosc

5.2 ROM

SNC678 contains 132K words (12-bit) internal ROM. Program, voices, melodies, data, and instrument waveforms share the same ROM with the others.

5.3 RAM

SNC678 contains 256 nibble RAM. The 256 nibble RAM is separated into four pages (page 0, page1, page2 and page 3). An implicit page indicator is utilized to specify page address. Four instructions, PAGE0, PAGE1, PAGE2 and PAGE3, can switch the page indicator. All 64 nibbles of each page can be accessed by direct mode (to specify M0 ~ M63 in the data transfer type instructions.)

5.4 Power Down Mode

“End” instruction will let SNC678 enter power down mode and consumer very little amount of current. (<3uA @VDD=3V and <5uA @VDD=5V) After SNC678 enters power down mode, any valid data transition (L→H or H→L) occurring on any IO ports (P1 to P6) lead SNC678 back to normal operation mode.

5.5 Sampling Rate Counters

4 independent sampling rate counters are dedicated to 4 individual voice channels to play voices with different playing rates. The playing rate is programmable from 4KHz to 40KHz. The resolution of sampling period of each sampling rate counter is 0.25 uS. This feature helps SNC678 play sounds with accurate pitches in the case of music instrument synthesis.

5.6 Auto Repetition

Auto repetition function helps SNC678 realize a “looping” sound automatically by hardware without any software effort. Auto repetition function is a very useful mechanism to implement “Sustain” sound in instrument synthesis. All 4 channels are equipped with this function. Arbitrary lengths of looping sound are accepted by SNC678.

5.7 I/O Ports

P1 to P6 are six 4-bit I/O ports. Any bit of each I/O port can be programmed to be input or output individually. Any valid data transition (H→ L or L→H) of each I/O port can reactivate the chip when it is in power-down stage.

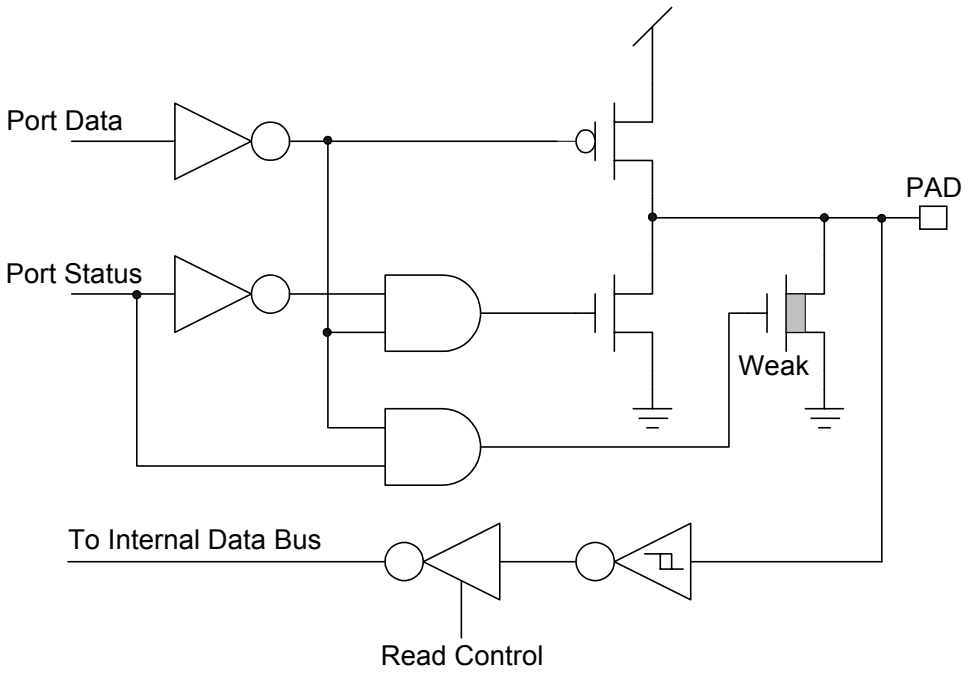

I/O Port Configuration

Note: weak N-MOS’s can serve as pull-low resistors.

5.8 IR Function

P33 can be modulated with 38.5KHz square wave before sent out to P33 pin. The IR signal can be achieved by this modulated signal.

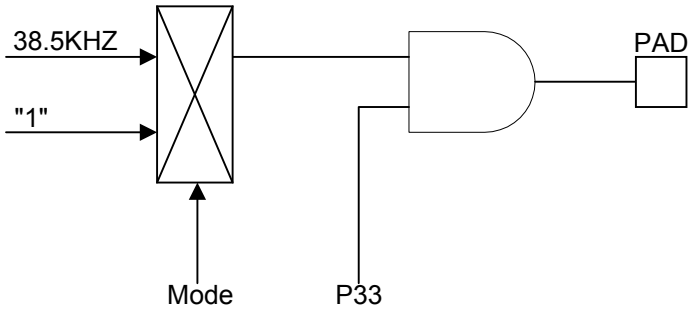

5.9 8-bit DAC

An 8-bit current type digital-to-analog converter is built-in SNC678. The relationship between of input digital data and output analog current signal is listed in the following table. Also, the recommended application circuit is illustrated as follows.

Input data	Typical value of output current (mA)
0	0
1	3/255
…	
N	n*(3/255)
…	
255	3

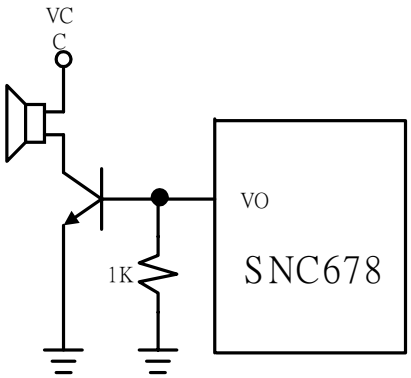

D/A Speaker Application

5.10 8-bit PWM

A PWM (pulse width modulation) circuit is built-in SNC678. PWM can convert input digital data into pulse trains with suitable different pulse width. The maximum resolution of PWM is 8 bits. Two huge output stage circuits are included in SNC678. Both of them are capable of driving speaker directly. Besides, 15 level PWM output current is provided for volume adjust function.

#	VOL[3..0]	Output Current (VDD=3V, Vo=1.5V)
0	0000	120mA
1	0001	105mA
2	0010	90mA
3	0011	75mA
4	0100	60mA
5	0101	52.5mA
6	0110	45mA
7	0111	37.5mA
8	1000	30mA
9	1001	22.5mA
A	1010	15mA
B	1011	10.25mA
C	1100	7.5mA
D	1101	3.75mA
E	1110	3.75mA
F	1111	0mA

15 levels PWM output current control

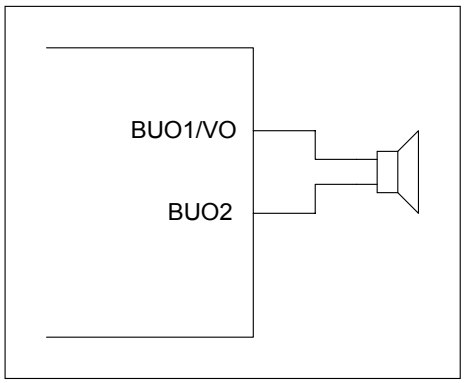

PWM output

6. ABSOLUTE MAXIMUM RATING

Items	Symbol	Min	Max	Unit.
Supply Voltage	V_{DD}-V	-0.3	6.0	V
Input Voltage	V_{IN}	V_{SS}-0.3	V_{DD}+0.3	V
Operating Temperature	T_{OP}	0	55.0	°C
Storage Temperature	T_{STG}	-55.0	125.0	°C

7. ELECTRICAL CHARACTERISTICS

Item	Sym.	Min.	Typ.	Max.	Unit	Condition
Operating Voltage	V_{DD}	2.4	3.0	5.5	V	
Standby Current	I_{SBY}	- -	2 5	- -	*u*A	V_{DD}=3V V_{DD}=4.5V
Operating Current (ROSC Mode)	I_{OPR}	- -	350 1.5	- -	*u*A mA	V_{DD}=3V, no load V_{DD}=4.5V, no load (ROSC Mode)
Operating Current (XTAL Mode)	I_{OPR}	- -	800 1.5	- -	*u*A mA	V_{DD}=3V, no load V_{DD}=4.5V, no load (XTAL Mode)
I/O port Input Current	I_{IH}	- -	3 10	10 30	*u*A	V_{DD}=3V, V_{IN}=3V V_{DD}=4.5V,V_{IN}=4.5V
I/O port Drive Current	I_{OD}	1.5 2	2 5	- -	*m*A	V_{DD}=3V, V_O=2.6V V_{DD}=4.5V, V_O=3.8V
I/O port Sink Current	I_{OS}	2 4	3 8	- -	*m*A	V_{DD}=3V, V_O=0.4V V_{DD}=4.5V, V_O=0.8V
D/A Output Current	I_{VO}	2 2	3 3	4 4	*m*A	V_{DD}=3V, V_O=0.7V V_{DD}=4.5V, V_O=0.7V
Oscillation Freq.	F_{OSC}	-	8	-	MHz	V_{DD}=3V
IR Carrier Frequency	Fir	-	38.5	-	KHz	Fosc=8MHz

8. ROSC Performance

ROSC frequency vs VDD (Typical value, R=100KΩ)

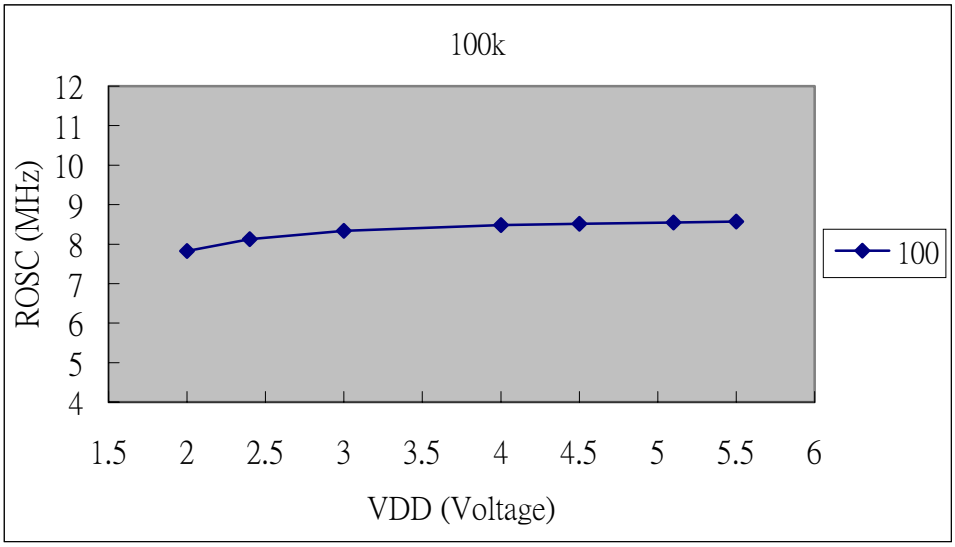

ROSC frequency vs VDD (For various R)

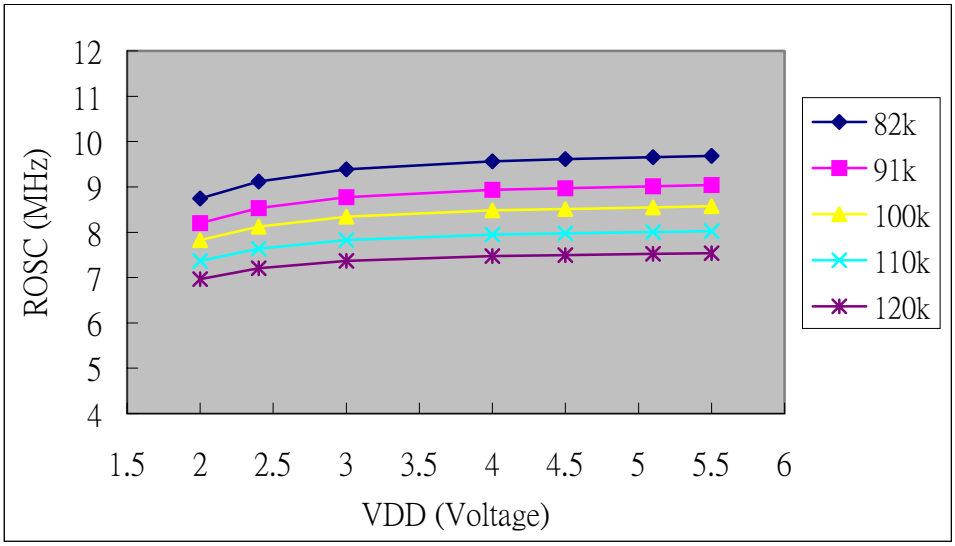

9. APPLICATION CIRCUIT

RC Oscillator, D/A Speaker Output, 32 Scan Keys

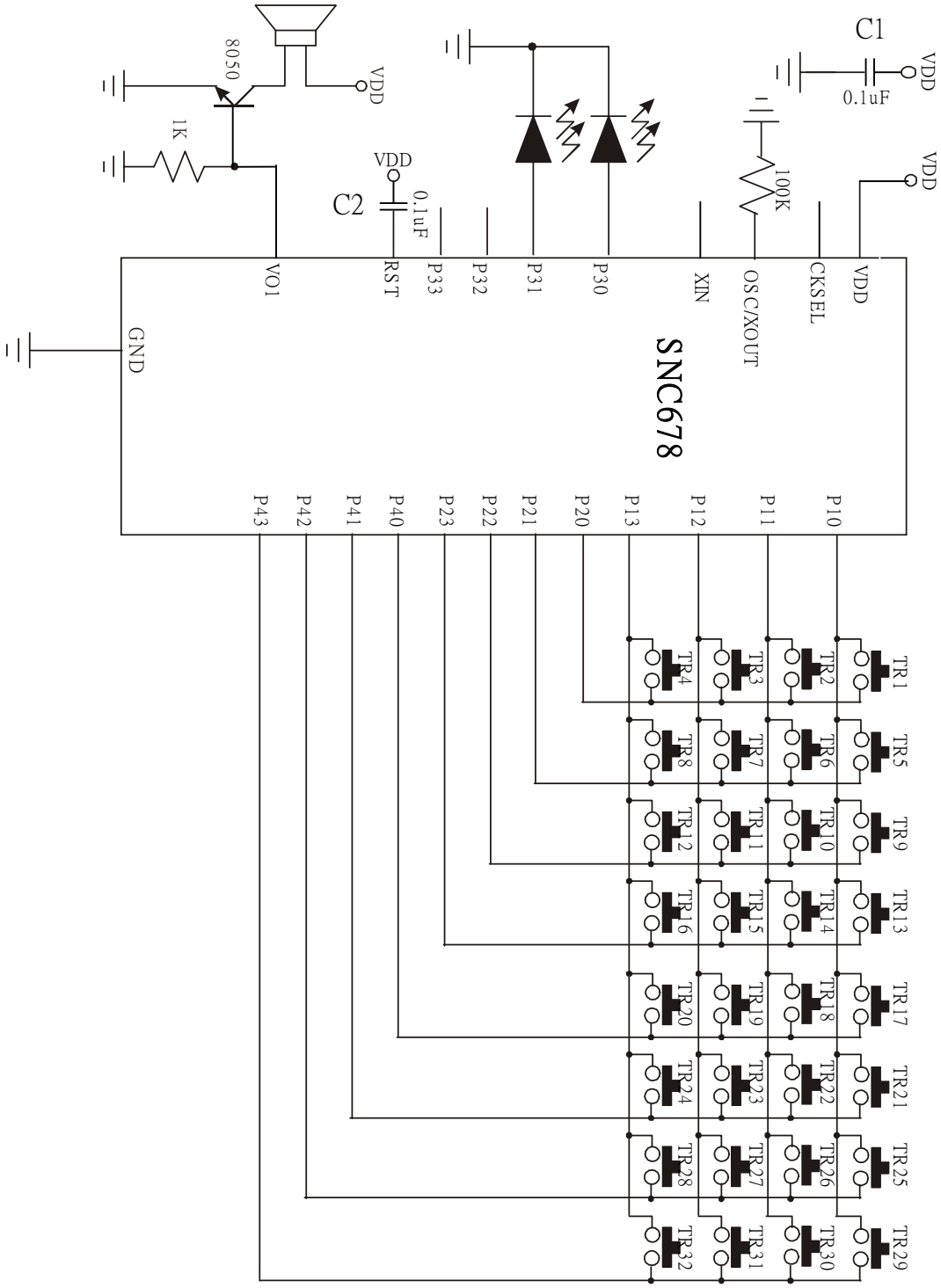

Note: The C1 (0.1uF) between Power and GND should be closed to VDD pin of SNC678 as possible.

Crystal Oscillator, PWM Speaker Output, 32 Scan Keys

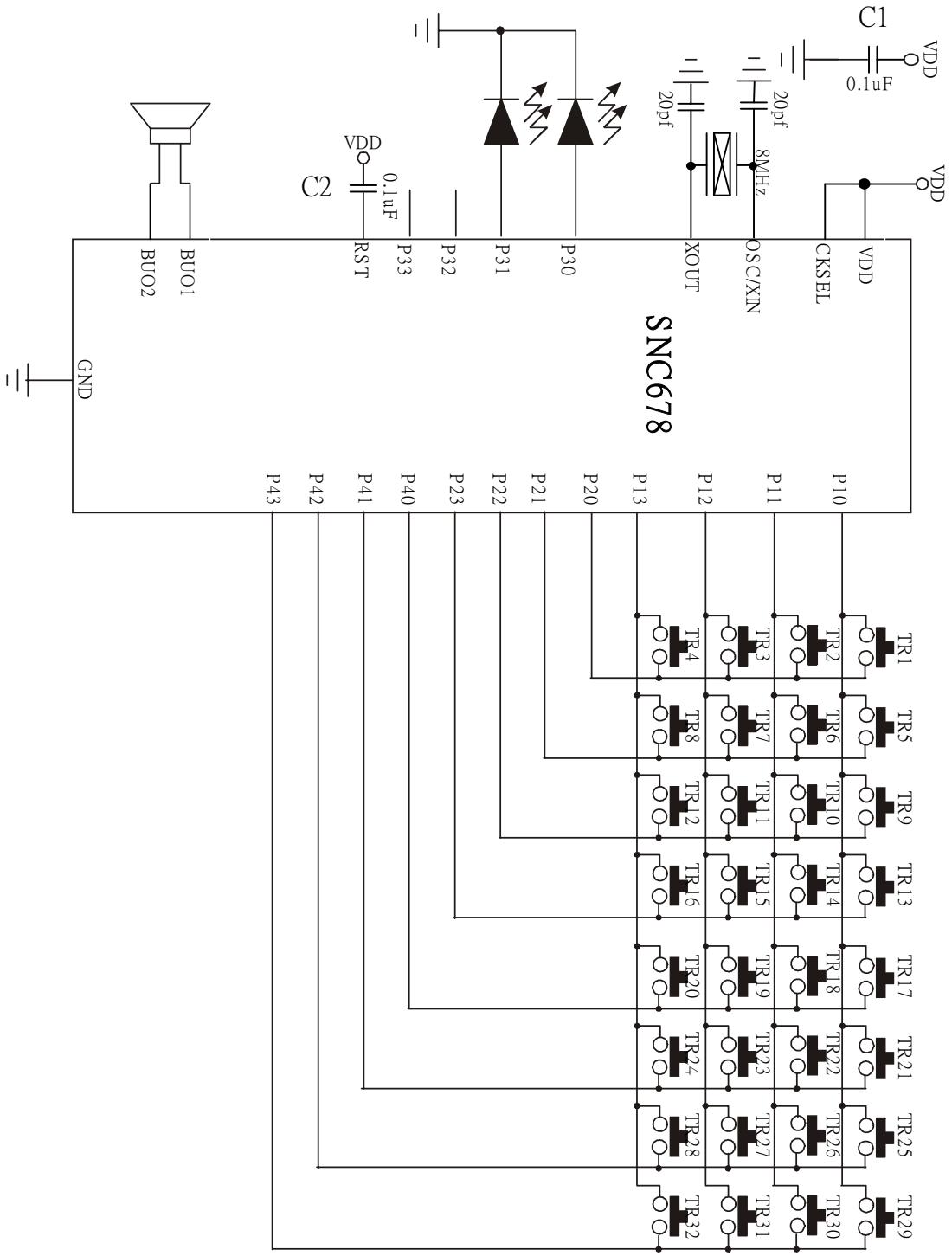

Note: The C1 (0.1uF) between Power and GND should be closed to VDD pin of SNC678 as possible.

10. BONDING PAD

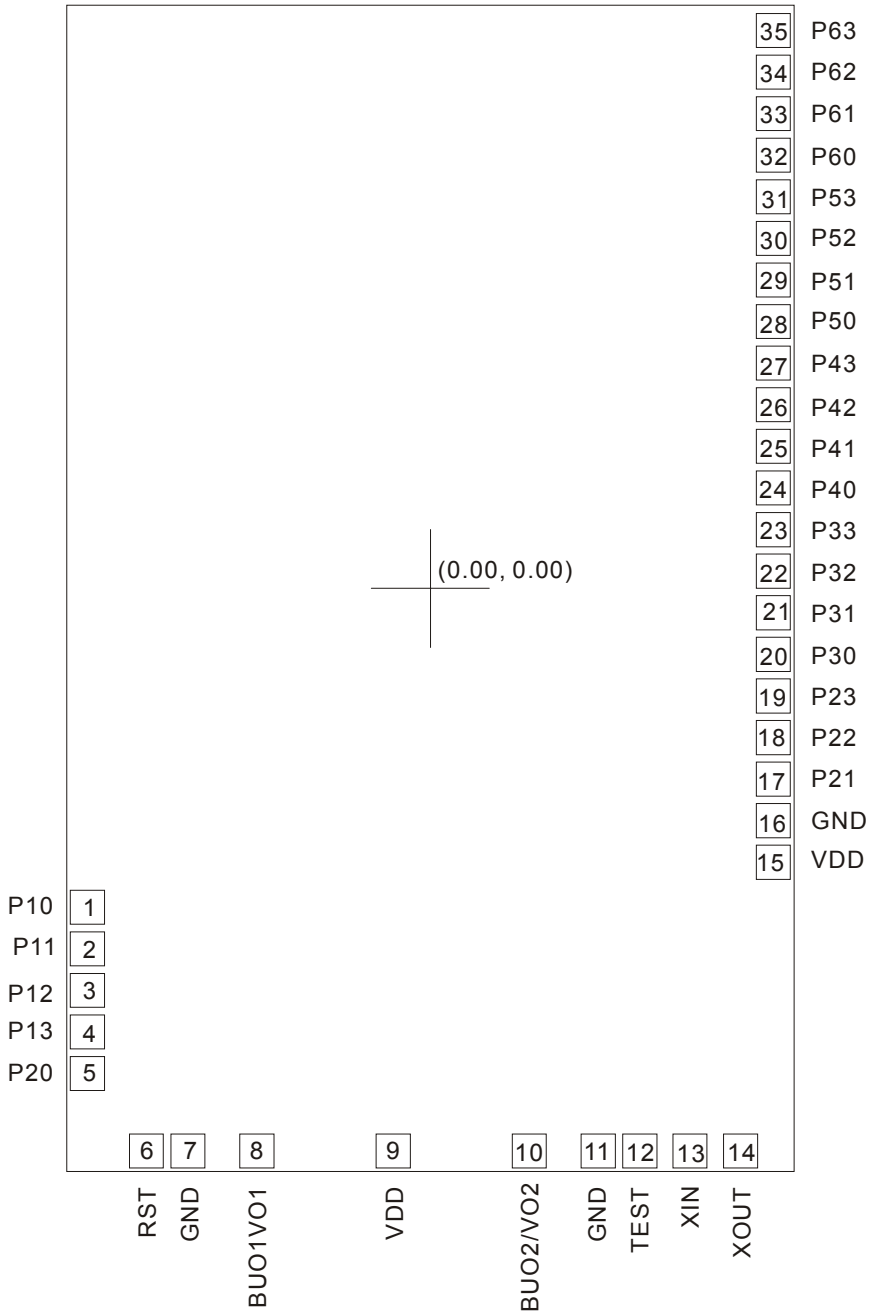

Note: The substrate MUST be connected to Vss in PCB layout.

DISCLAIMER

The information appearing in SONiX web pages (“this publication”) is believed to be accurate.
However, this publication could contain technical inaccuracies or typographical errors. The reader should not assume that this publication is error-free or that it will be suitable for any particular purpose. SONiX makes no warranty, express, statutory implied or by description in this publication or other documents which are referenced by or linked to this publication. In no event shall SONiX be liable for any special, incidental, indirect or consequential damages of any kind, or any damages whatsoever, including, without limitation, those resulting from loss of use, data or profits, whether or not advised of the possibility of damage, and on any theory of liability, arising out of or in connection with the use or performance of this publication or other documents which are referenced by or linked to this publication.
This publication was developed for products offered in Taiwan. SONiX may not offer the products discussed in this document in other countries. Information is subject to change without notice. Please contact SONiX or its local representative for information on offerings available. Integrated circuits sold by SONiX are covered by the warranty and patent indemnification provisions stipulated in the terms of sale only.
The application circuits illustrated in this document are for reference purposes only.
SONIX DISCLAIMS ALL WARRANTIES, INCLUDING THE WARRANTY OF MERCHANTABILITY OR FITNESS FOR ANY PURPOSE. SONIX reserves the right to halt production or alter the specifications and prices, and discontinue marketing the Products listed at any time without notice. Accordingly, the reader is cautioned to verify that the data sheets and other information in this publication are current before placing orders.
Products described herein are intended for use in normal commercial applications. Applications involving unusual environmental or reliability requirements, e.g. military equipment or medical life support equipment, are specifically not recommended without additional processing by SONIX for such application.