1 INTRODUCTION

SNC333 is a 1-channel voice synthesizer and dual-tone melody IC with PWM direct drive circuit. It built-in a 4-bit tiny controller with one 4-bit input port and two 4-bit I/O ports. By programming through the tiny controller in SNC333, user's varied applications including voice section combination, dual-tone melody, key trigger arrangement, output control, and other logic functions can be easily implemented.

2 FEATURES

- Single power supply 2.4V – 5.5V
- 13 seconds voice capacity are provided (@6KHZ sample rate)
- Built in a 4-bit tiny controller
- One 4-bit input port and two 4-bit I/O ports are provided
- 128*4 bits RAM are provided
- 40K*10 ROM size are provided for voice data and program
- Maximum 16k program ROM is provided
- Readable ROM code data
- IR carrier signal is provided
- Built in a high quality speech synthesizer
- Adaptive playing speed from 2.5k-20kHz is provided
- One voice channel plus Dual-Tone Melody
- Built in a PWM Direct Drive circuit and a fixed current D/A output
- System clock : 2MHz
- Low Power Reset

3 Block Diagram

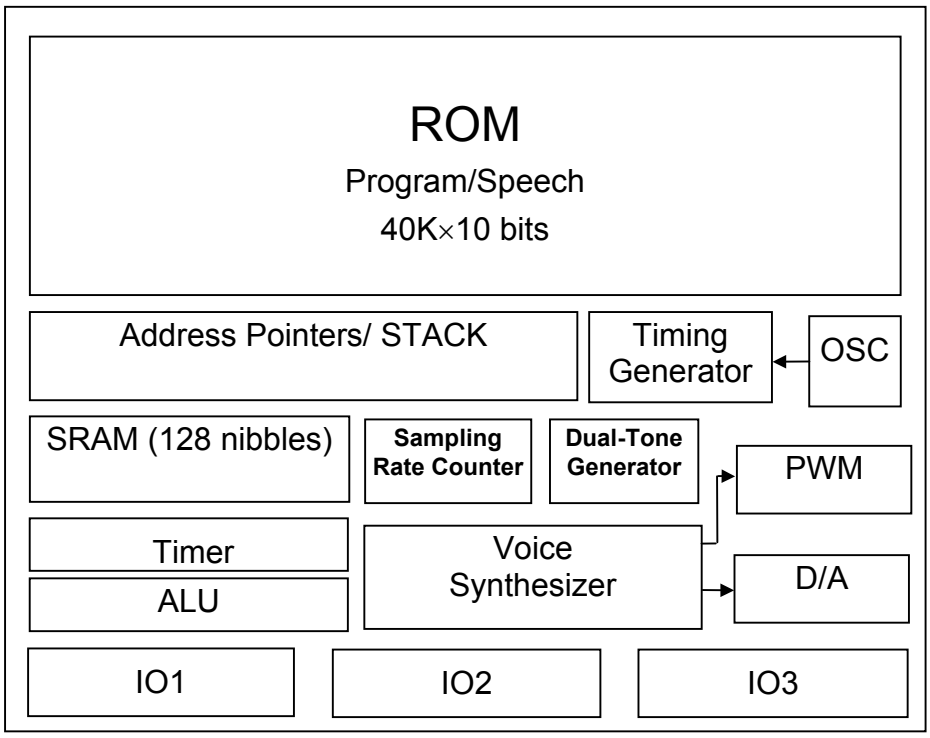

4 PIN ASSIGNMENT

Symbol	I/O	Function Description
P13 ~ P10	I	Bit3 ~ Bit0 of Input port 1
P23 ~ P20	I/O	Bit3 ~ Bit0 of I/O port 2
P33 ~ P30	I/O	Bit3 ~ Bit0 of I/O port 3
VDD	P	Positive power supply
GND	P	Negative power supply
RST	I	Reset pin (active high)
OSC	O	Oscillator / Crystal Out
BUO1/VO	O	Positive Output of PWM or DA output
BUO2	O	Negative Output of PWM

5 FUNCTION DESCRIPTIONS

5.1. Oscillator

SNC333 accept RC type oscillator for system clock. The typical circuit diagram for oscillator is listed as follow.

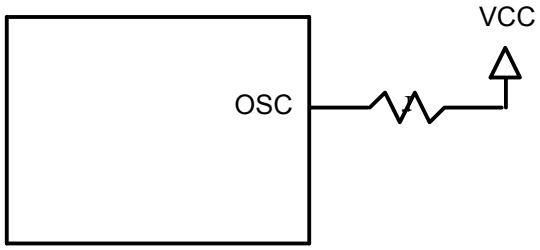

RC Oscillator

5.2. ROM

SNC333 contains substantial 40K words (10-bit) internal ROM. Program, voices and other data are shared with this same 40K words ROM.

5.3. RAM

SNC333 contains 128 nibbles RAM. The 128 nibbles RAM are divided into eight pages (page 0 to page 7, 16 nibbles RAM on each page). In our programming structure, users can easily define and locate RAM page in the program. For instance, users can use the instructions, PAGEn (n=0 to 7) to switch and indicate the RAM page. Besides, users can use direct mode, M0 ~ M15 in the data transfer type instructions, to access all 16 nibbles of each page.

5.4. Power Down Mode

"End" instruction will power down SNC333 and enable IC to consume fewer current for power saving. (<3uA @VDD=3V and <5uA @VDD=5V) Please be aware that when the power down mode is activated in SNC333, any valid data transition (L→H or H→L) occurring on any input port (P1) or IO ports (P2 and P3) will lead SNC333 back to normal operation mode.

5.5. Sampling Rate Counter

The unique sampling rate counter is designed in voice channel to be able to play diverse voices at different sample playing rates. The playing rate can be adaptively set up among from the wide ranges of 2.5KHz to 20KHz. This feature makes voice close to its original source and yield the better voice quality.

5.6. Dual-Tone Generator

A dual-tone melody generator is included to generate 2-channel music songs with a pleasant square-wave-like timbre. The pitch range of each tone generator is as wide as 4 octaves (48 different notes totally). The output of dual-tone generator can be mixed with the output of voice synthesizer to achieve voice playing with BGM (background music). Additionally, Sonix provides a numbered-musical-notation representation to help users compose their songs. Further, a MIDI (1.0) file translator can convert MIDI files into Sonix format.

5.7. I/O Ports

P1 is a 4-bit input port and P2/P3 are two 4-bit I/O ports. Any bit of P2 and P3 can be programmed as either input or output port individually. Any valid data transition (H→ L or L→H) of P1, P2 and P3 can reactivate the chip when the chip is in power-down mode.

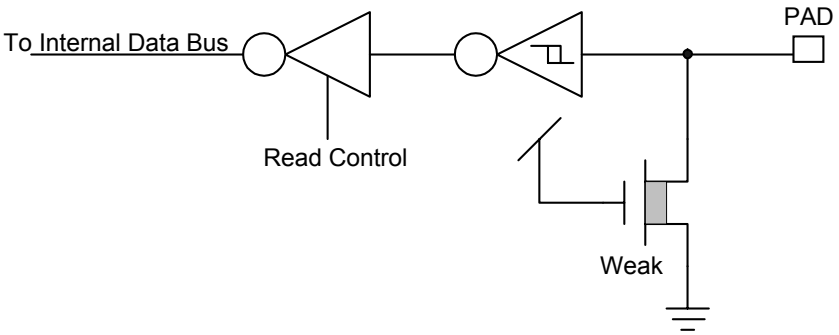

Input Port Configuration (P10~P13)

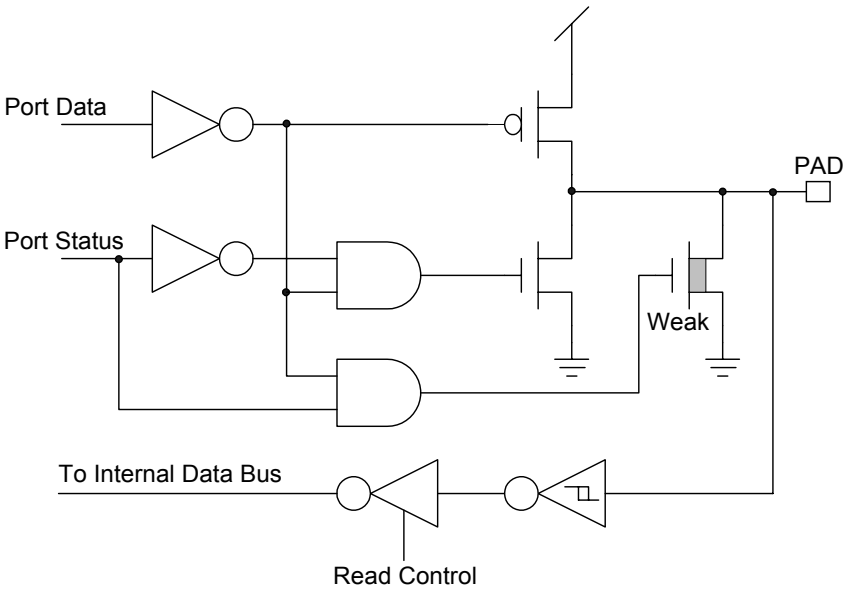

I/O Port Configuration (P20~P23, P30~P33)

Note: weak N-MOS's can serve as pull-low resistor.

5.8. IR Function

P33 can be modulated with 38.5KHz square wave before sent out to P33 pin. The IR signal can be achieved by this modulated signal.

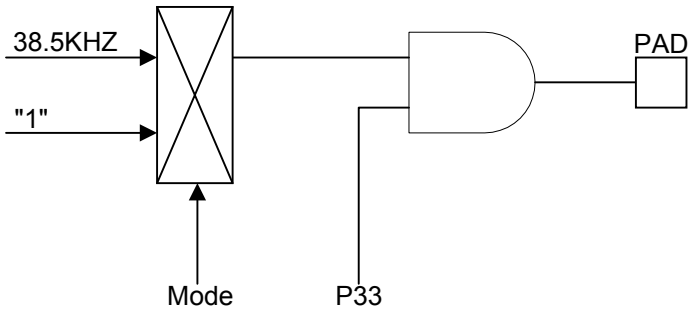

5.9. DAC & PWM

SNC333 is an advanced chip to be designed having two optimal methods to play out the voices. One is DAC and the other is PWM. Upon user's applications, user can select either DAC or PWM in his design. Please be aware that only one method can be activated at a time.

DAC: A 7-bit current type digital-to-analog converter is built-in SNC333. The relationship between input digital data and output analog current signal is listed in the following table. Also, the recommended application circuit is illustrated as follows.

Input data	Typical value of output current (mA)
0	0
1	3/127
…	
N	n*(3/127)
…	
127	3

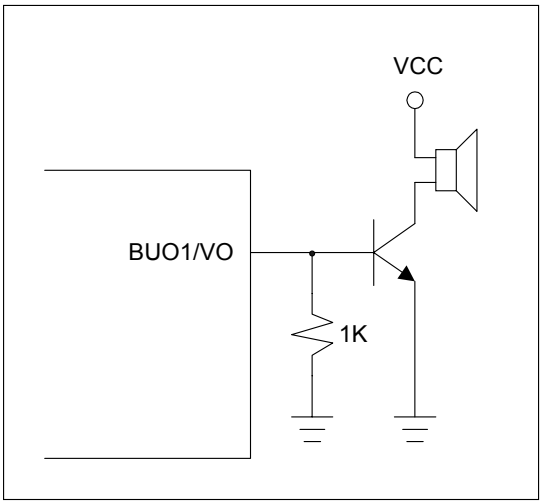

DAC output

PWM: A PWM (pulse width modulation) circuit is built-in SNC333. PWM can convert input digital data into pulse trains with suitable different pulse width. The maximum resolution of PWM is 7 bits. Two huge output stage circuits are designed in SNC333. With this advanced circuit, the chip is capable of driving speaker directly without external transistors. The recommended application circuit is illustrated as follows.

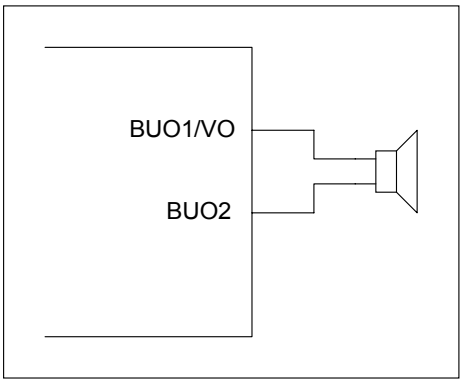

PWM Output

6 ABSOLUTE MAXIMUM RATING

Items	Symbol	Min	Max	Unit.
Supply Voltage	V_{DD}-V	-0.3	6.0	V
Input Voltage	V_{IN}	V_{SS}-0.3	V_{DD}+0.3	V
Operating Temperature	T_{OP}	0	55.0	°C
Storage Temperature	T_{STG}	-55.0	125.0	°C

7 ELECTRICAL CHARACTERISTICS

Item	Sym.	Min.	Typ.	Max.	Unit	Condition
Operating Voltage	V_{DD}	2.4	3.0	5.5	V	
Standby current	I_{SBY}	-	2.0 5.0	-	*u*A	V_{DD}=3V , no load V_{DD}=4.5V, no load
Operating Current	I_{OPR}	-	300 700	-	*u*A	V_{DD}=3V , no load V_{DD}=4.5V, no load
Input current of P1, P2, P3	I_{IH}	-	3.0	10.0	*u*A	V_{DD}=3V,V_{IN}=3V
Drive current of P2, P3	I_{OD}	-	4	-	*m*A	V_{DD}=3V,V_O=2.4V
Sink Current of P2, P3	I_{OS}	-	6	-	*m*A	V_{DD}=3V,V_O=0.4V
Drive current of P2, P3	I_{OD}	-	5	-	*m*A	V_{DD}=4.5V,V_O=3.9V
Sink Current of P2, P3	I_{OS}	-	9	-	*m*A	V_{DD}=4.5V,V_O=0.4V
Drive current of Buo1	I_{OD}	100	120	-	*m*A	VDD=3V,Buo1=1.5V
Sink Current of Buo1	I_{OS}	100	120	-	*m*A	VDD=3V,Buo1=1.5V
Drive Current of Buo2	I_{OD}	100	120	-	*m*A	VDD=3V,Buo2=1.5V
Sink Current of Buo2	I_{OS}	100	120	-	*m*A	VDD=3V,Buo2=1.5V
Oscillation Freq.	F_{OSC}	-	2.0	-	MHz	V_{DD}=3V
IR Carrier Frequency	Fir	-	38.5	-	KHz	Fosc=2MHz

8 ROSC Performance

ROSC frequency vs VDD (Typical value, R=120KΩ)

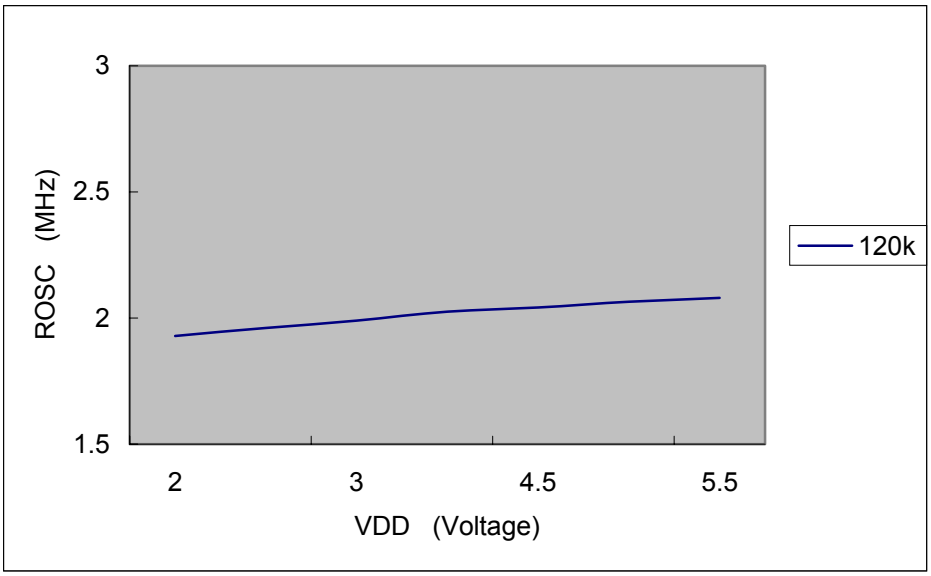

ROSC frequency vs. VDD (For various R)

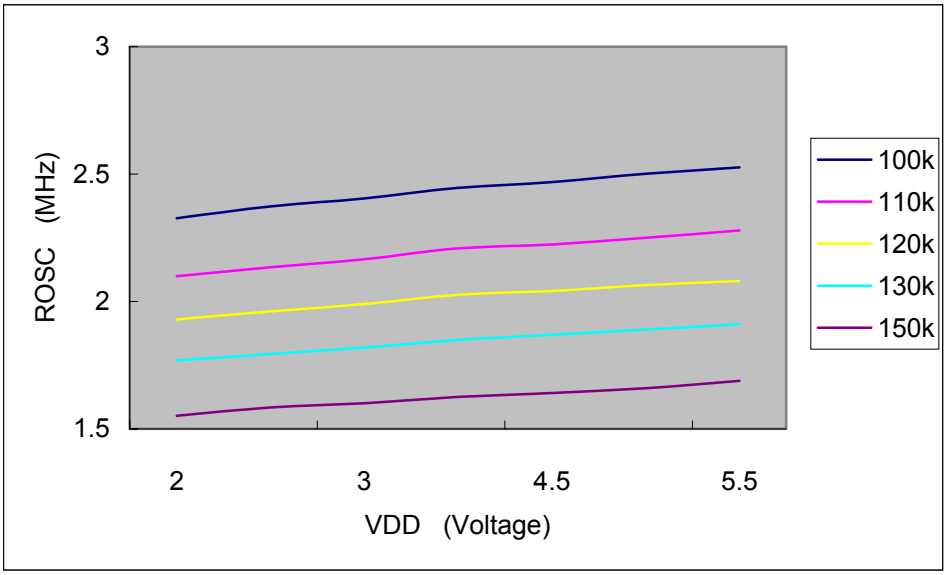

9 APPLICATION CIRCUIT

D/A Speaker Output
16 Scan Keys

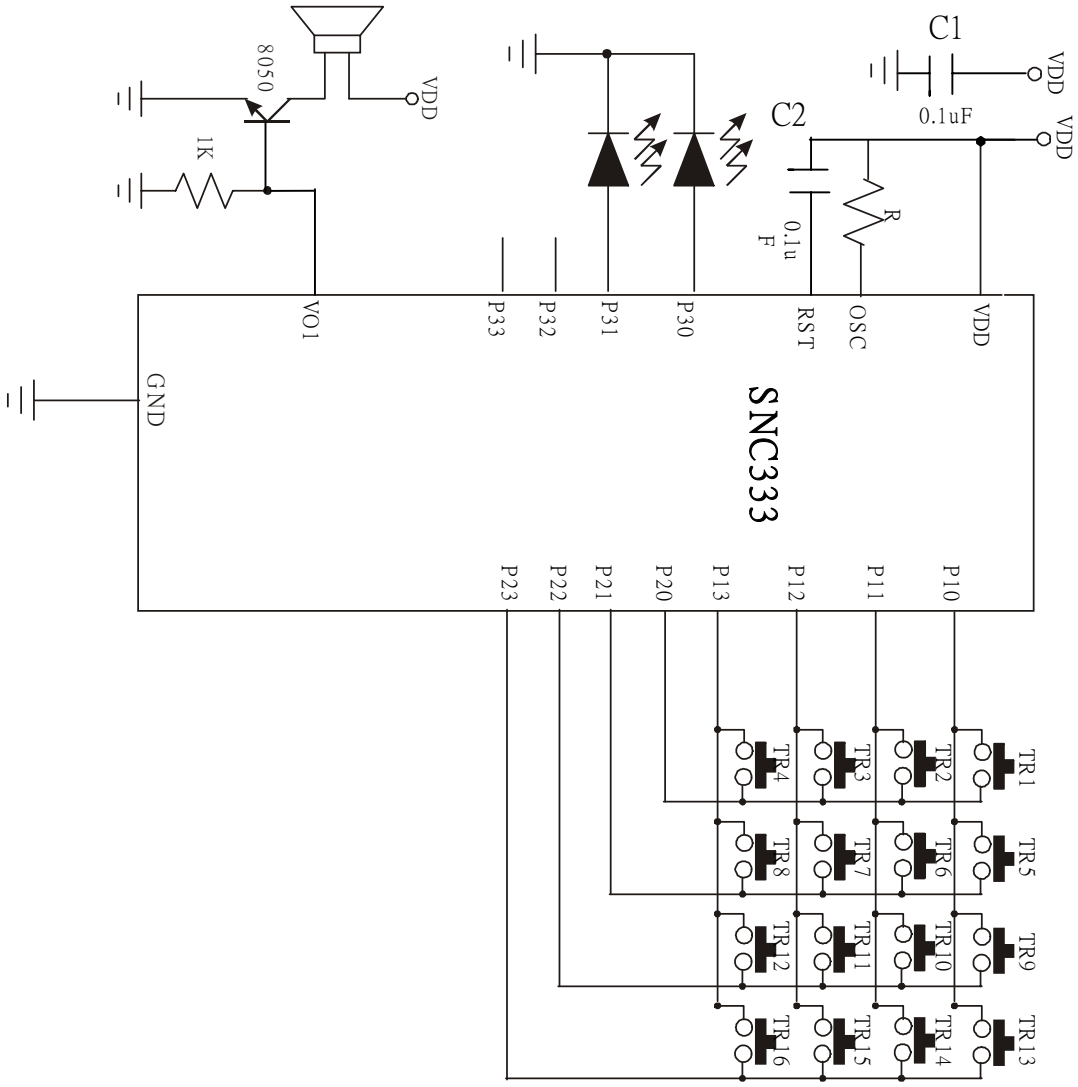

Note: The C1 (0.1uF) between Power and GND should be closed to VDD pin of SNC333 as possible.

10 BONDING PAD

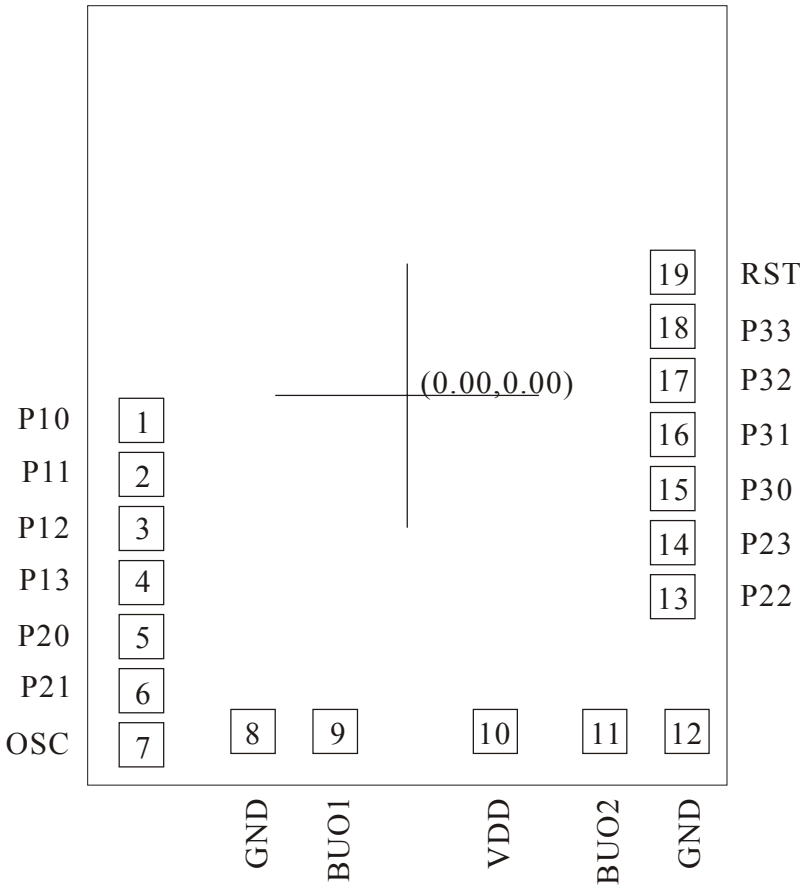

SNC333

Note: The substrate MUST be connected to Vss in PCB layout.

DISCLAIMER

The information appearing in SONiX web pages (“this publication”) is believed to be accurate.
However, this publication could contain technical inaccuracies or typographical errors. The reader should not assume that this publication is error-free or that it will be suitable for any particular purpose. SONiX makes no warranty, express, statutory implied or by description in this publication or other documents which are referenced by or linked to this publication. In no event shall SONiX be liable for any special, incidental, indirect or consequential damages of any kind, or any damages whatsoever, including, without limitation, those resulting from loss of use, data or profits, whether or not advised of the possibility of damage, and on any theory of liability, arising out of or in connection with the use or performance of this publication or other documents which are referenced by or linked to this publication.
This publication was developed for products offered in Taiwan. SONiX may not offer the products discussed in this document in other countries. Information is subject to change without notice. Please contact SONiX or its local representative for information on offerings available. Integrated circuits sold by SONiX are covered by the warranty and patent indemnification provisions stipulated in the terms of sale only.
The application circuits illustrated in this document are for reference purposes only.
SONIX DISCLAIMS ALL WARRANTIES, INCLUDING THE WARRANTY OF MERCHANTABILITY OR FITNESS FOR ANY PURPOSE. SONIX reserves the right to halt production or alter the specifications and prices, and discontinue marketing the Products listed at any time without notice. Accordingly, the reader is cautioned to verify that the data sheets and other information in this publication are current before placing orders.
Products described herein are intended for use in normal commercial applications. Applications involving unusual environmental or reliability requirements, e.g. military equipment or medical life support equipment, are specifically not recommended without additional processing by SONIX for such application.


GREEN VOICE™
Approval Number: P221
Sonix Technology Co., Ltd.
SNC3xx series Voice Chips
This is to certify that Sonix Technology's SNC3xx series
sound generating chips are in compliance with
Green Voice™ specifications
for use with 16 ohms or higher impedance speakers.
Products making use of the certified Green Voice™ chips
are entitled to use the Green Voice™ Mark in the packaging
and promotional material. Please refer to the web site
www.growwithme.org
for product registration procedure to use the Green Voice™ Mark.
Certification granted by:
Grow With Me (Educational Research Fund), Inc.
May 16, 2002.
Green Voice™ and the Green Voice™ mark are trademarks of Grow With Me (Educational Research Fund), Inc.,
a public not for profit company dedicated to the future of our next generation.