========== CONTENTS ==========

1. INTRODUCTION 2

2. FEATURES 2

3. BLOCK DIAGRAM 3

4. PIN ASSIGNMENT 3

5. FUNCTION DESCRIPTIONS 4

5.1. OSCILLATOR 4
5.2. ROM 4
5.3. RAM 4
5.4. POWER DOWN MODE 4
5.5. SAMPLING RATE COUNTERS 4
5.6. EVENT MARK 5
5.7. I/O PORTS 5
5.8. DAC & PWM 6

6. ABSOLUTE MAXIMUM RATING 8

7. ELECTRICAL CHARACTERISTICS 8

8. APPLICATION CIRCUIT 9

DISCLAIMER 11

1. INTRODUCTION

SNC203 is a single channel voice synthesizer IC with PWM direct drive circuit. It built-in a 4-bit tiny controller with one 4-bit I/O port. By programming through the tiny controller in SNC203, user's varied applications including voice section combination, key trigger arrangement, output control, and other logic functions can be easily implemented.

2. FEATURES

- Single power supply 2.4V – 5.5V
- 10 seconds voice capacity are provided (@6KHZ sample rate)
- Built in a 4-bit tiny controller
  Where P3.2, P3.3 can direct drive LED (8mA for driving, 16mA for sink)
- One 4-bit I/O port is provided
- 32*4 bits RAM are provided
- 32K*10 ROM size are provided for voice data and program
- Maximum 16K program ROM is provided
- Readable ROM code data
- Built in a high quality speech synthesizer
- Adaptive playing speed from 2.5k-20kHz is provided
- Built in a PWM Direct Drive circuit and a fixed current D/A output
- 8-level volume control for PWM Direct Drive output
- System clock: 2MHz
- Low Power Reset

3. Block Diagram

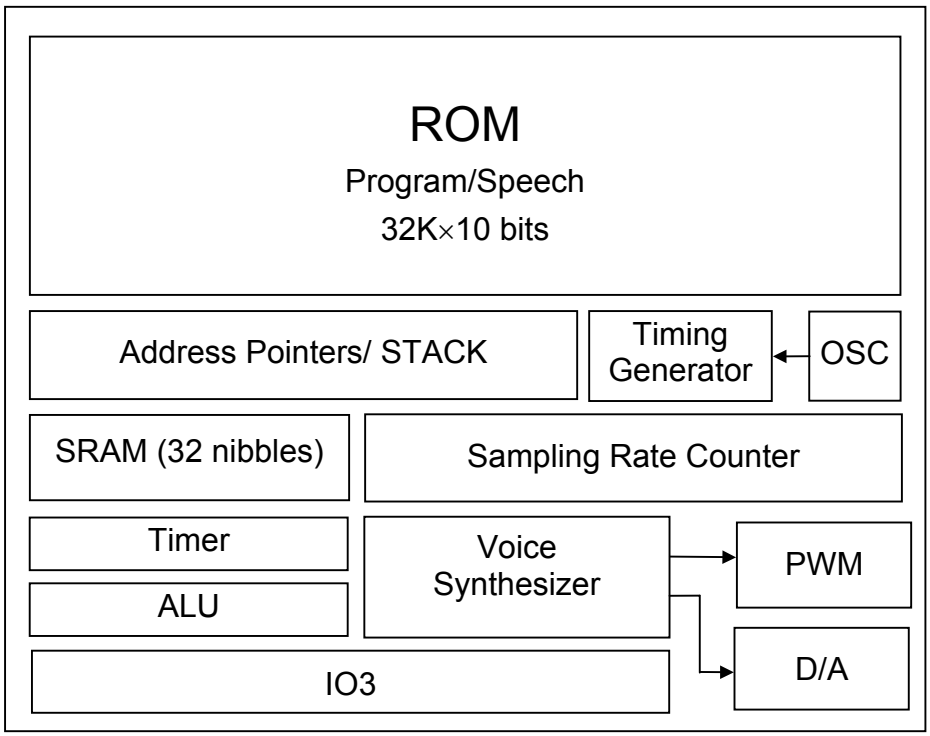

4. PIN ASSIGNMENT

Symbol	I/O	Function Description
P33 ~ P30	I/O	Bit3 ~ Bit0 of I/O port 3
VDD	P	Positive power supply
GND	P	Negative power supply
RST	I	Reset pin (active high)
OSC	O	Oscillator / Crystal Out
BUO1/VO	O	Positive Output of PWM or DA output
BUO2	O	Negative Output of PWM

5. FUNCTION DESCRIPTIONS

5.1. Oscillator

SNC203 accept RC type oscillator for system clock. The typical circuit diagram for oscillator is listed as follow.

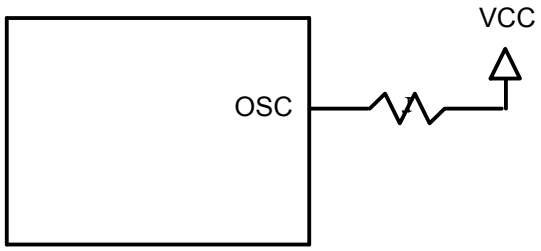

RC Oscillator

5.2. ROM

SNC203 contains substantial 32K words (10-bit) internal ROM. Program, voices and other data are shared with this same 32K words ROM.

5.3. RAM

SNC203 contains 32 nibbles RAM. The 32 nibbles RAM are divided into two pages (page 0 and page 1, 16 nibble RAM on each page). In our programming structure, users can easily define and locate RAM page in the program. For instance, users can use the instructions, PAGEn (n=0 to 1) to switch and indicate the RAM page. Besides, users can use direct mode, M0 ~ M15 in the data transfer type instructions, to access all 16 nibbles of each page.

5.4. Power Down Mode

“End” instruction will power down SNC203 and enable IC to consume fewer current for power saving. (<3uA @VDD=3V and <5uA @VDD=5V) Please be aware that when the power down mode is activated in SNC203, any valid data transition (L→H or H→L) occurring on any IO pins of P3 will lead SNC203 back to normal operation mode.

5.5. Sampling Rate Counters

The playing rate can be adaptively set up among from the wide ranges of 2.5KHz to 20KHz. This feature makes voice close to its original source and yield the better voice quality.

5.6. Event Mark

This is a new function for SNC203, it allows user to add a special mark in wave data by the voice edit tool “CoolEdit”. User can insert event tags in anywhere of his wave file and can easy to get this special code to do his special action during voice playing. That means, it should be easily to control the I/O (such as LED or motor) and other actions to synchronize with voice.

5.7. I/O Ports

P3 is a 4-bit I/O ports. Any bit of P3 can be programmed as either input or output port individually. Any valid data transition (H→ L or L→H) of P3 can reactivate the chip when the chip is in power-down mode.

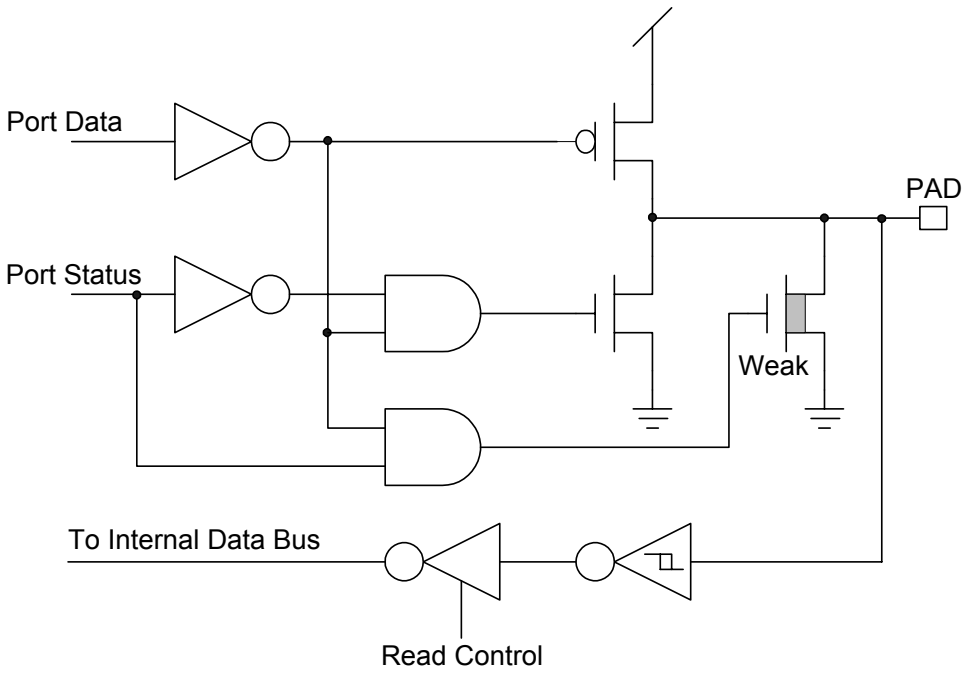

I/O Port Configuration (P30~P33)

Note:

(1) Weak N-MOS’s can serve as pull-low resistors.

(2) The driving and sink current of P3.2 and P3.3 are enhance to be 8mA/16mA. So user can direct to drive the LED through those two I/O pins.

5.8. DAC & PWM

SNC203 is an advanced chip to be designed having two optimal methods to play out the voices. One is DAC and the other is PWM. Upon user's applications, user can select either DAC or PWM in his design. Please be aware that only one method can be activated at a time.

DAC: A 7-bit current type digital-to-analog converter is built-in SNC203. The relationship between input digital data and output analog current signal is listed in the following table. Also, the recommended application circuit is illustrated as follows.

Input data	Typical value of output current (mA)
0	0
1	3/127
…	
N	n*(3/127)
…	
127	3

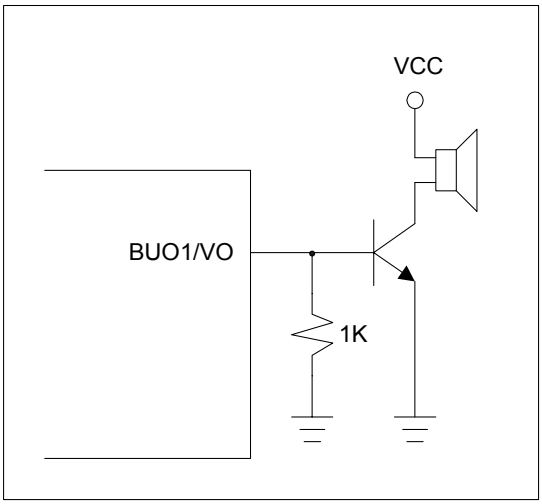

DAC output

PWM: A PWM (pulse width modulation) circuit is built-in SNC203. PWM can convert input digital data into pulse trains with suitable different pulse width. The maximum resolution of PWM is 7 bits. Two huge output stage circuits are designed in SNC203. With this advanced circuit, the chip is capable of driving speaker directly without external transistors. The recommended application circuit is illustrated as follows.

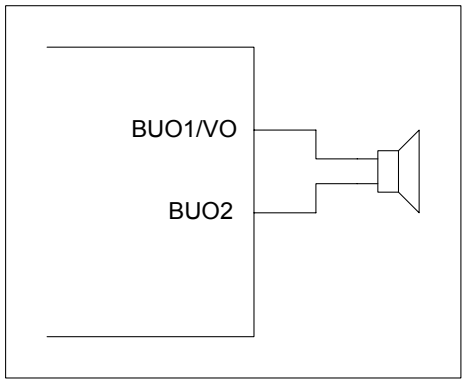

PWM Output

6. ABSOLUTE MAXIMUM RATING

Items	Symbol	Min	Max	Unit.
Supply Voltage	V_{DD}-V	-0.3	6.0	V
Input Voltage	V_{IN}	V_{SS}-0.3	V_{DD}+0.3	V
Operating Temperature	T_{OP}	0	55.0	°C
Storage Temperature	T_{STG}	-55.0	125.0	°C

7. ELECTRICAL CHARACTERISTICS

Item	Sym.	Min.	Typ.	Max.	Unit	Condition
Operating Voltage	V_{DD}	2.4	3.0	5.5	V	
Standby current	I_{SBY}	-	2.2 4.8	-	*u*A	V_{DD}=3V , no load V_{DD}=4.5V, no load
Operating Current	I_{OPR}	-	300 1000	-	*u*A	V_{DD}=3V , no load V_{DD}=4.5V, no load
Input current of P30~P33	I_{IH}	-	3.0	10.0	*u*A	V_{DD}=3V,V_{IN}=3V
Drive current of P30, P31	I_{OD}	-	5	-	*m*A	V_{DD}=3V,V_O=2.4V
Sink Current of P30, P31	I_{OS}	-	6	-	*m*A	V_{DD}=3V,V_O=0.4V
Drive current of P32, P33	I_{OD}	-	**11**	-	*m*A	V_{DD}=3V,V_O=2.4V
Sink Current of P32, P33	I_{OS}	-	**17**	-	*m*A	V_{DD}=3V,V_O=0.4V
Drive current of Buo1, Buo2	I_{OD}	**120**	**150**	-	*m*A	VDD=3V,Buo1=1.5V
Sink Current of Buo1, Buo2	I_{OS}	**120**	**150**	-	*m*A	VDD=3V,Buo1=1.5V
Oscillation Freq.	F_{OSC}	-	2.0	-	MHz	V_{DD}=3V

8. APPLICATION CIRCUIT

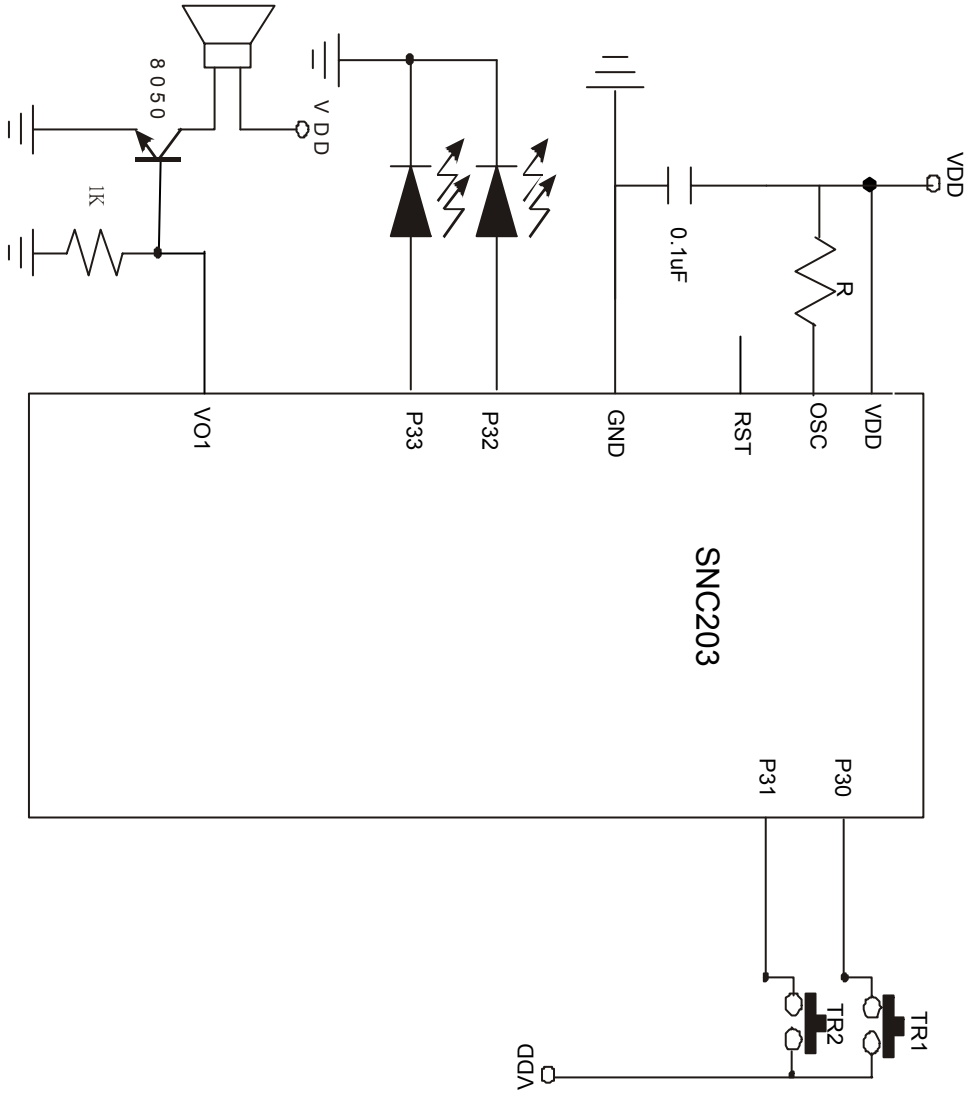

D/A Speaker Output

AMENDMENT HISTORY

Version	Date	Description
Ver 0.1	September 10, 2003	First issue.
Ver 0.2	September 23, 2003	Modify the driving/sink current of P30~P33
Ver 0.3	September 24, 2003	Modify Block Diagram
Ver 1.0	March 29, 2004	Add Application Circuit. Modify the ELECTRICAL CHARACTERISTICS
Ver 1.1	June 8,2005	Modify Application circuit, remove the capacitor between RST and VDD

DISCLAIMER

The information appearing in SONiX web pages (“this publication”) is believed to be accurate.
However, this publication could contain technical inaccuracies or typographical errors. The reader should not assume that this publication is error-free or that it will be suitable for any particular purpose. SONiX makes no warranty, express, statutory implied or by description in this publication or other documents which are referenced by or linked to this publication. In no event shall SONiX be liable for any special, incidental, indirect or consequential damages of any kind, or any damages whatsoever, including, without limitation, those resulting from loss of use, data or profits, whether or not advised of the possibility of damage, and on any theory of liability, arising out of or in connection with the use or performance of this publication or other documents which are referenced by or linked to this publication.
This publication was developed for products offered in Taiwan. SONiX may not offer the products discussed in this document in other countries. Information is subject to change without notice. Please contact SONiX or its local representative for information on offerings available. Integrated circuits sold by SONiX are covered by the warranty and patent indemnification provisions stipulated in the terms of sale only.
The application circuits illustrated in this document are for reference purposes only.
SONIX DISCLAIMS ALL WARRANTIES, INCLUDING THE WARRANTY OF MERCHANTABILITY OR FITNESS FOR ANY PURPOSE. SONIX reserves the right to halt production or alter the specifications and prices, and discontinue marketing the Products listed at any time without notice. Accordingly, the reader is cautioned to verify that the data sheets and other information in this publication are current before placing orders.
Products described herein are intended for use in normal commercial applications. Applications involving unusual environmental or reliability requirements, e.g. military equipment or medical life support equipment, are specifically not recommended without additional processing by SONIX for such application.