AGC AMPLIFIER

FEATURES

- **Low-Distortion Automatic Gain Control (AGC) Amplifier**
- **5-V Power Supply**
- **8-Pin Mini Small-Outline Package (MSOP)**
- **Wide Gain Control Range**

DGK PACKAGE
(TOP VIEW)

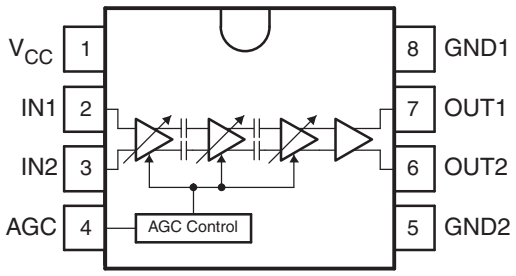

APPLICATIONS

- **Digital TVs**
- **Digital CATVs**
- **Digital Set-Top Boxes (STBs)**

DESCRIPTION

The SN761643 is an automatic gain control (AGC) amplifier for the TV tuner system of a digital TV, CATV, or STB. The circuit consists of three stages of controlled-gain amplification, followed by a fixed-gain output amplifier.

The device is packaged in an 8-pin MSOP suitable for surface mounting.

This integrated circuit can be damaged by ESD. Texas Instruments recommends that all integrated circuits be handled with appropriate precautions. Failure to observe proper handling and installation procedures can cause damage.

Please be aware that an important notice concerning availability, standard warranty, and use in critical applications of Texas Instruments semiconductor products and disclaimers thereto appears at the end of this data sheet.

PRODUCTION DATA information is current as of publication date. Products conform to specifications per the terms of the Texas Instruments standard warranty. Production processing does not necessarily include testing of all parameters.

Copyright © 2009, Texas Instruments Incorporated

TERMINAL FUNCTIONS

TERMINAL		I/O	EQUIVALENT CIRCUIT	DESCRIPTION
NAME	NO.			
AGC	4	I	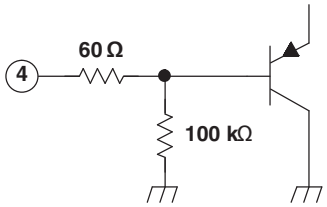	Gain control voltage input
GND1	8			Power amplifier ground
GND2	5	–		Pre-amplifier ground
IN1 IN2	2 3	I	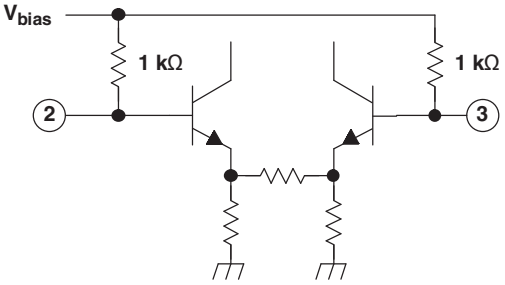	AGC amplifier input
OUT1 OUT2	7 6	O	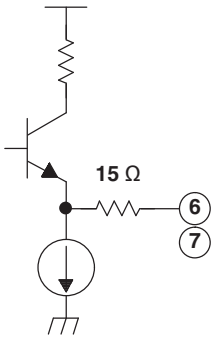	AGC amplifier output
V_{CC}	1	–		5-V power supply

Correct Use

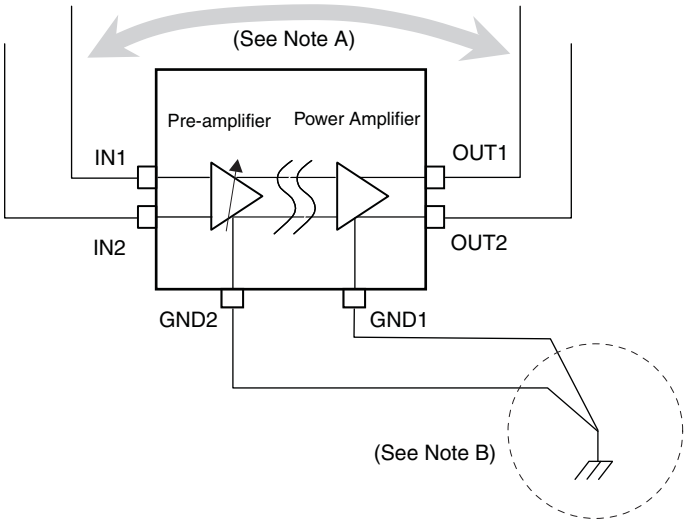

A. Be careful to keep enough isolation between input and output line.

B. Form a ground pattern as widely as possible. GND1 and GND2 should not have common impedance.

Copyright © 2009, Texas Instruments Incorporated

ABSOLUTE MAXIMUM RATINGS(1)

over operating free-air temperature range (unless otherwise noted)

			MIN	MAX	UNIT
V_{CC}	Supply voltage range(2)	V_{CC} (pin 1)	–0.4	6.5	V
V_I	Input voltage range(2)	AGC (pin 4)	–0.4	V_{CC}	V
P_D	Continuous total dissipation(3)			477	mW
T_{JC}	Maximum junction temperature			150	°C

(1) Stresses beyond those listed under *Absolute Maximum Ratings* may cause permanent damage to the device. These are stress ratings only, and functional operation of the device at these or any other conditions beyond those indicated under *Recommended Operating Conditions* is not implied. Exposure to absolute-maximum-rated conditions for extended periods may affect device reliability.
(2) Voltage values are with respect to the GND of the circuit.
(3) At $T_A \leq 25°C$. For $T_A > 25°C$, the derating factor is 3.82 mW/°C.

RECOMMENDED OPERATING CONDITIONS

		MIN	NOM	MAX	UNIT
V_{CC}	Supply voltage	4.5	5	5.5	V
T_{OPE}	Operating free-air temperature	–20		85	°C

DC ELECTRICAL CHARACTERISTICS

V_{CC} = 5 V, T_A = 25°C (unless otherwise noted)

PARAMETER		TEST CONDITIONS	MIN	TYP	MAX	UNIT
I_{CC}	Supply current	V_{AGC} = 3 V		28		mA
I_{IAGC}	Input current (AGC)	V_{AGC} = 3 V		30	60	µA
V_{AGCMAX}	AGC maximum gain control voltage	Maximum gain	3		V_{CC}	V
V_{AGCMIN}	AGC minimum gain control voltage	Minimum gain	0		0.2	V

AC ELECTRICAL CHARACTERISTICS

V_{CC} = 5 V, T_A = 25°C, parameters measured in test circuit (unless otherwise noted)

PARAMETER		TEST CONDITIONS	MIN	TYP	MAX	UNIT
G_{MAX1}	Maximum gain 1	V_{AGC} = 3 V, f_{IN} = 44 MHz, V_{IN} = –60 dBm, differential out, see Figure 10	57	61	65	dB
G_{MIN1}	Minimum gain 1	V_{AGC} = 0 V, f_{IN} = 44 MHz, V_{IN} = –60 dBm, differential out, see Figure 10	–7	–4	–1	dB
G_{MAX2}	Maximum gain 2	V_{AGC} = 3 V, f_{IN} = 44 MHz, V_{IN} = –60 dBm, see Figure 1 and Figure 11	51	55	59	dB
G_{MIN2}	Minimum gain 2	V_{AGC} = 0 V, f_{IN} = 44 MHz, V_{IN} = –60 dBm, see Figure 1 and Figure 11	–13	–10	–7	dB
GCR	Gain control range	V_{AGC} = 0 V to 3 V		65		dB
V_{OUT}	Output voltage	Single-ended output, see Figure 3		2.1		Vp-p
NF	Noise figure	Maximum gain, see Figure 2		11		dB
IM3	Third-order intermodulation distortion	f_{IN1} = 43.5 MHz, f_{IN2} = 44.5 MHz, Maximum gain, V_{OUT} = –2 dBm/tone, 1Vp-p See Figure 5 and Figure 12		–50		dBc
IIP3	Input intercept point	Minimum gain		11		dBm
r_{IN}	Input resistance (IN1, IN2)			1		kΩ
r_{OUT}	Output resistance (OUT1, OUT2)			25		Ω

Copyright © 2009, Texas Instruments Incorporated

TYPICAL CHARACTERISTICS

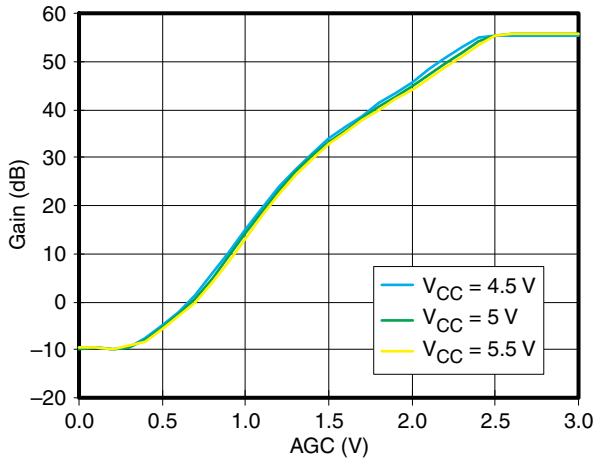

Figure 1. Gain vs AGC (T_A = 25°C)

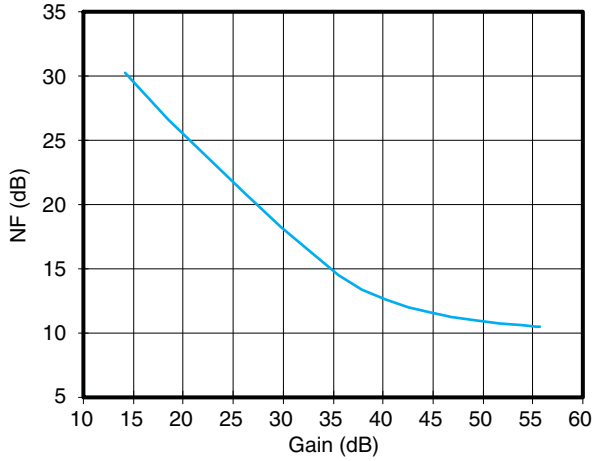

Figure 2. Noise Figure vs Gain (V_{CC} = 5 V, T_A = 25°C)

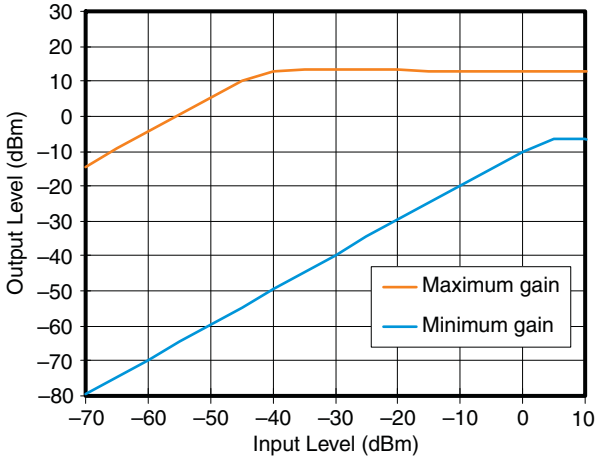

Figure 3. Output Level vs Input Level (T_A = 25°C)

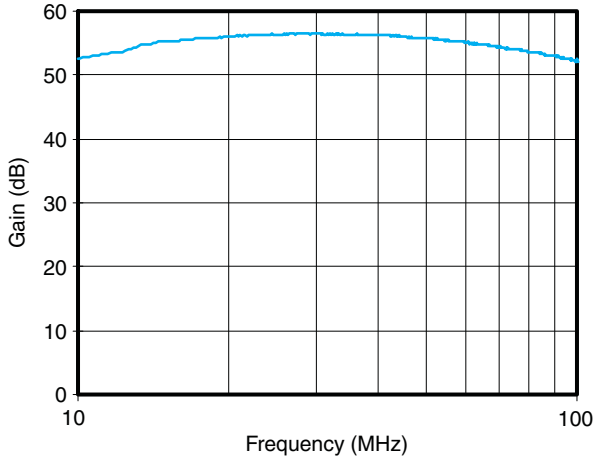

Figure 4. Gain vs Frequency (Gain = Max, T_A = 25°C)

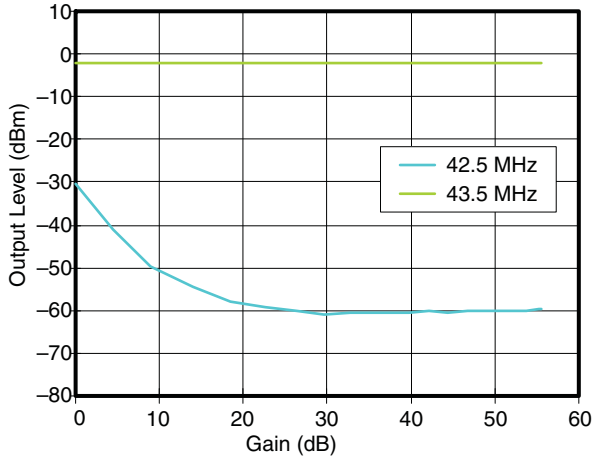

Figure 5. IM3 vs Gain (V_{CC} = 5 V, T_A = 25°C)

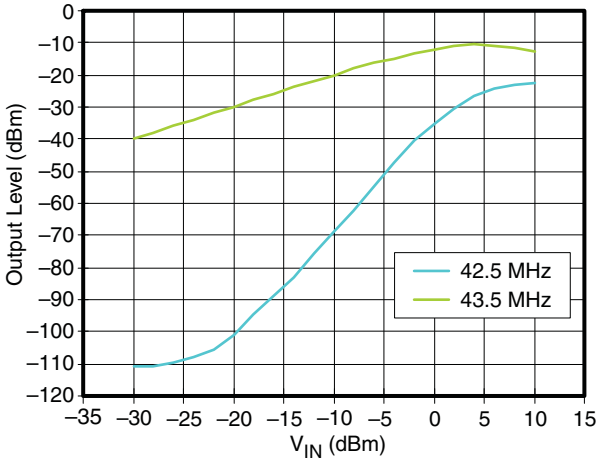

Figure 6. IM3 (Gain = Min, V_{CC} = 5 V, T_A = 25°C)

Copyright © 2009, Texas Instruments Incorporated

TYPICAL CHARACTERISTICS (continued)

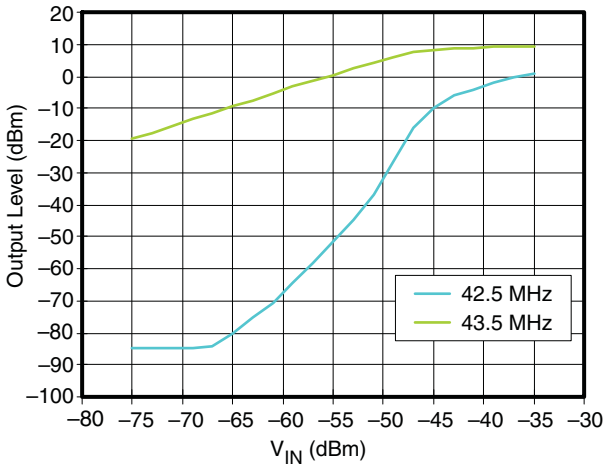

Figure 7. IM3 (Gain = Max, V_{CC} = 5 V, T_A = 25°C)

S-Parameter

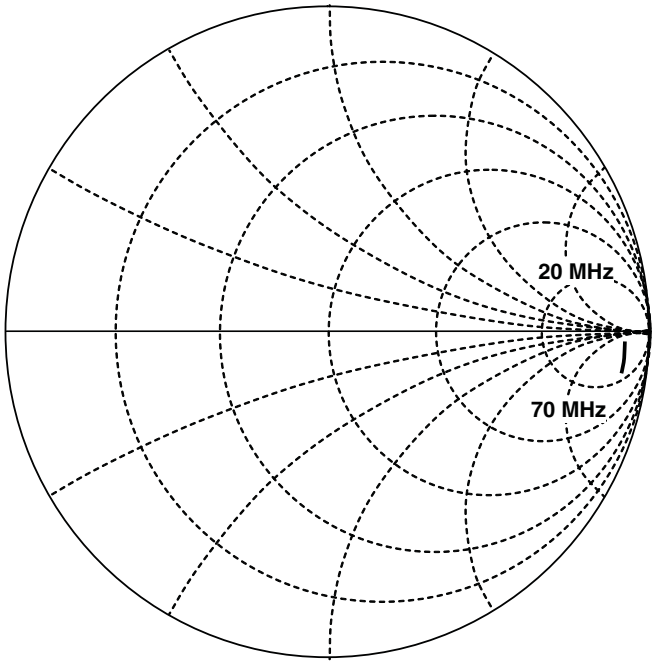

Figure 8. IN1

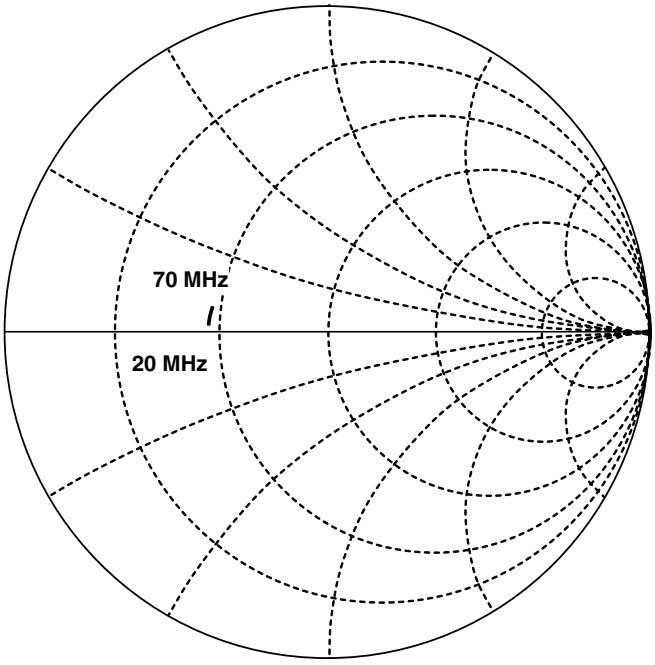

Figure 9. OUT1

APPLICATION INFORMATION

Test Circuits

This application information is advisory, and a performance check is required for actual application circuits.

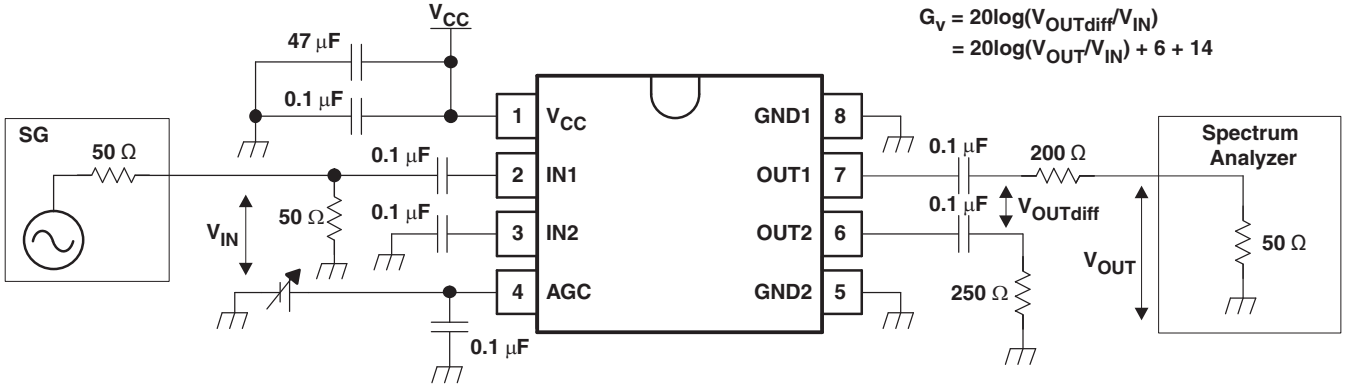

Figure 10. Measurement Circuit for Gain and Output Voltage 1

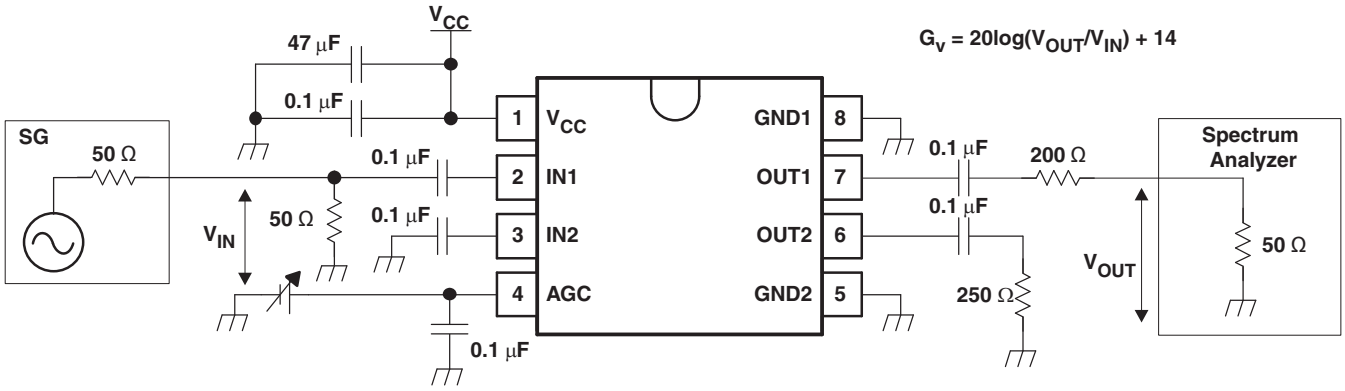

Figure 11. Measurement Circuit for Gain and Output Voltage 2

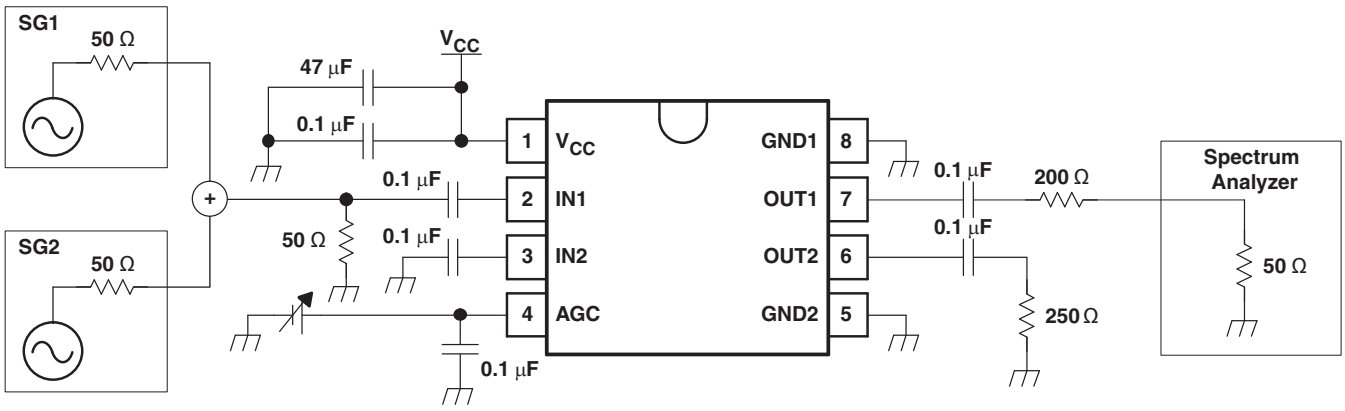

Figure 12. Measurement Circuit for IM3 and IIP3

Copyright © 2009, Texas Instruments Incorporated

TAPE AND REEL INFORMATION

REEL DIMENSIONS

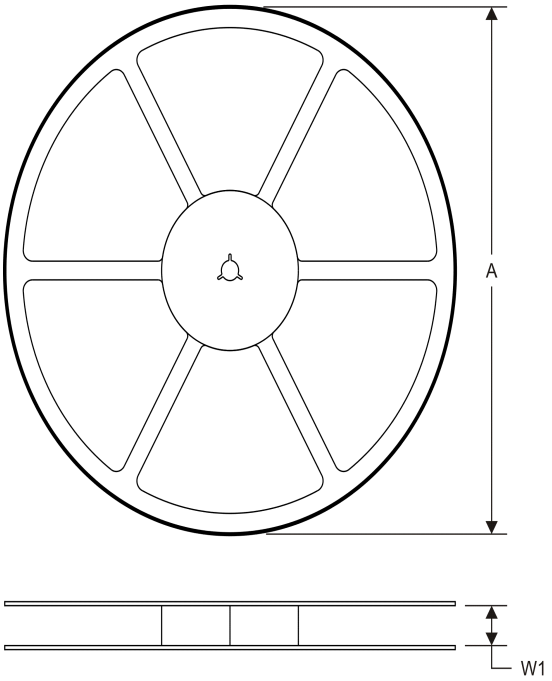

TAPE DIMENSIONS

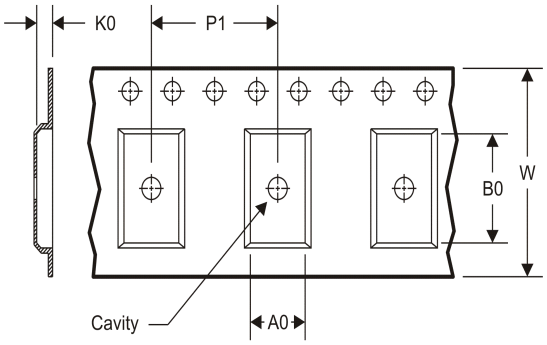

A0	Dimension designed to accommodate the component width
B0	Dimension designed to accommodate the component length
K0	Dimension designed to accommodate the component thickness
W	Overall width of the carrier tape
P1	Pitch between successive cavity centers

TAPE AND REEL INFORMATION

*All dimensions are nominal

Device	Package Type	Package Drawing	Pins	SPQ	Reel Diameter (mm)	Reel Width W1 (mm)	A0 (mm)	B0 (mm)	K0 (mm)	P1 (mm)	W (mm)	Pin1 Quadrant
SN761643DGKR	VSSOP	DGK	8	2500	330.0	12.4	5.3	3.4	1.4	8.0	12.0	Q1

TAPE AND REEL BOX DIMENSIONS

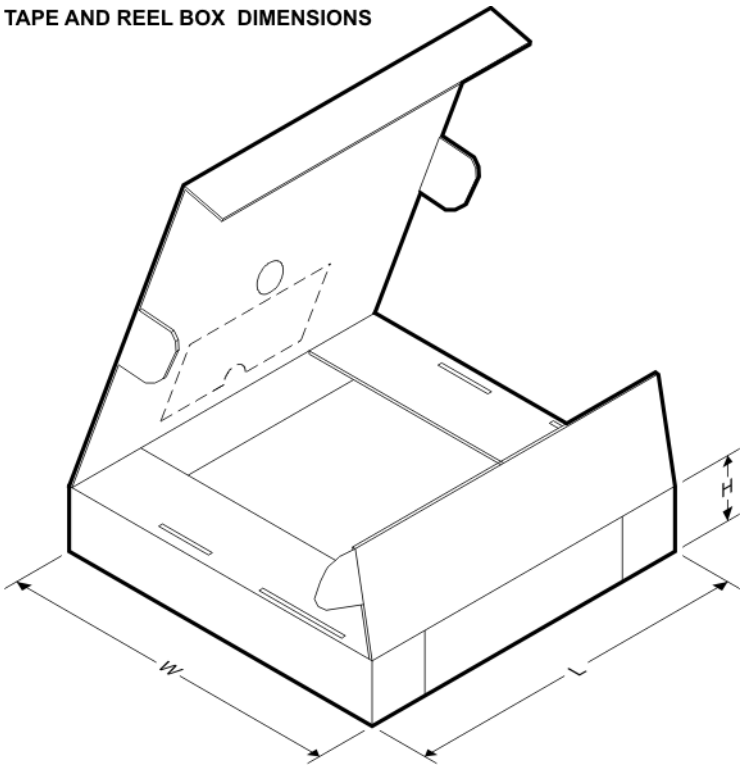

*All dimensions are nominal

Device	Package Type	Package Drawing	Pins	SPQ	Length (mm)	Width (mm)	Height (mm)
SN761643DGKR	VSSOP	DGK	8	2500	367.0	367.0	35.0

DGK (S–PDSO–G8) PLASTIC SMALL–OUTLINE PACKAGE

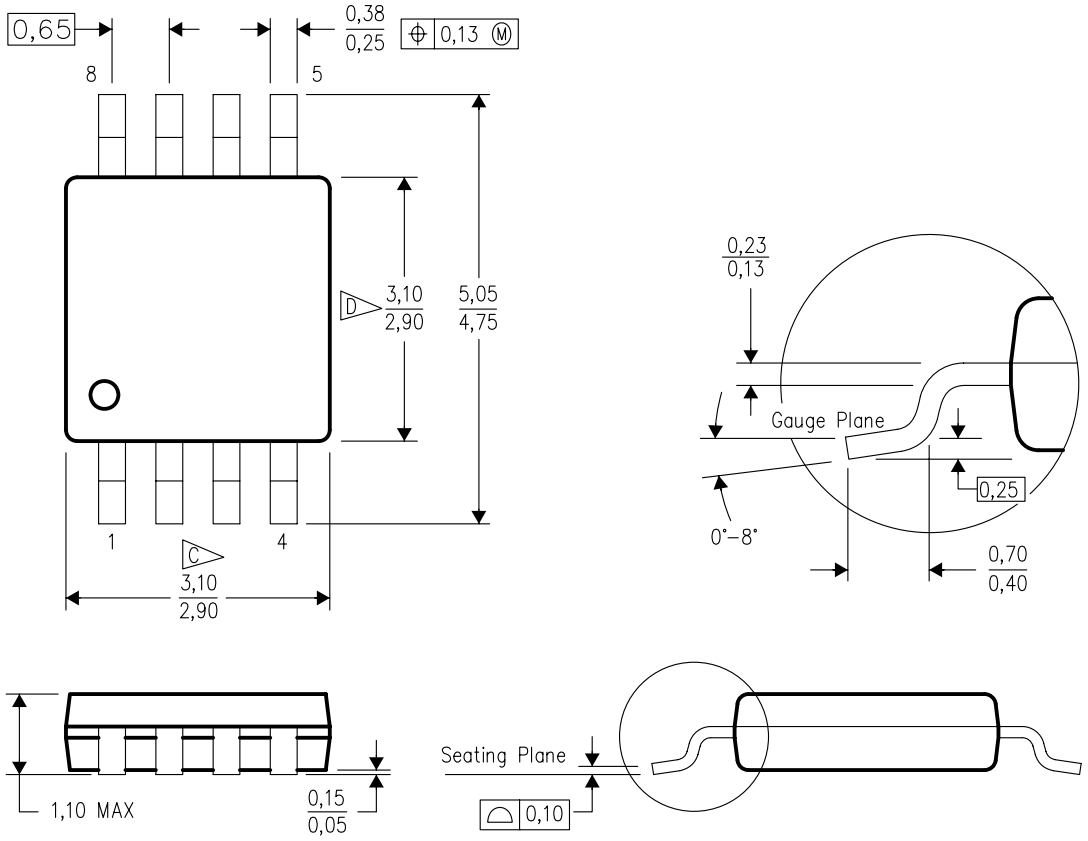

4073329/E 05/06

NOTES:
A. All linear dimensions are in millimeters.
B. This drawing is subject to change without notice.
C. Body length does not include mold flash, protrusions, or gate burrs. Mold flash, protrusions, or gate burrs shall not exceed 0.15 per end.
D. Body width does not include interlead flash. Interlead flash shall not exceed 0.50 per side.
E. Falls within JEDEC MO–187 variation AA, except interlead flash.

IMPORTANT NOTICE

Texas Instruments Incorporated and its subsidiaries (TI) reserve the right to make corrections, enhancements, improvements and other changes to its semiconductor products and services per JESD46C and to discontinue any product or service per JESD48B. Buyers should obtain the latest relevant information before placing orders and should verify that such information is current and complete. All semiconductor products (also referred to herein as “components”) are sold subject to TI’s terms and conditions of sale supplied at the time of order acknowledgment.

TI warrants performance of its components to the specifications applicable at the time of sale, in accordance with the warranty in TI’s terms and conditions of sale of semiconductor products. Testing and other quality control techniques are used to the extent TI deems necessary to support this warranty. Except where mandated by applicable law, testing of all parameters of each component is not necessarily performed.

TI assumes no liability for applications assistance or the design of Buyers’ products. Buyers are responsible for their products and applications using TI components. To minimize the risks associated with Buyers’ products and applications, Buyers should provide adequate design and operating safeguards.

TI does not warrant or represent that any license, either express or implied, is granted under any patent right, copyright, mask work right, or other intellectual property right relating to any combination, machine, or process in which TI components or services are used. Information published by TI regarding third-party products or services does not constitute a license to use such products or services or a warranty or endorsement thereof. Use of such information may require a license from a third party under the patents or other intellectual property of the third party, or a license from TI under the patents or other intellectual property of TI.

Reproduction of significant portions of TI information in TI data books or data sheets is permissible only if reproduction is without alteration and is accompanied by all associated warranties, conditions, limitations, and notices. TI is not responsible or liable for such altered documentation. Information of third parties may be subject to additional restrictions.

Resale of TI components or services with statements different from or beyond the parameters stated by TI for that component or service voids all express and any implied warranties for the associated TI component or service and is an unfair and deceptive business practice. TI is not responsible or liable for any such statements.

Buyer acknowledges and agrees that it is solely responsible for compliance with all legal, regulatory and safety-related requirements concerning its products, and any use of TI components in its applications, notwithstanding any applications-related information or support that may be provided by TI. Buyer represents and agrees that it has all the necessary expertise to create and implement safeguards which anticipate dangerous consequences of failures, monitor failures and their consequences, lessen the likelihood of failures that might cause harm and take appropriate remedial actions. Buyer will fully indemnify TI and its representatives against any damages arising out of the use of any TI components in safety-critical applications.

In some cases, TI components may be promoted specifically to facilitate safety-related applications. With such components, TI’s goal is to help enable customers to design and create their own end-product solutions that meet applicable functional safety standards and requirements. Nonetheless, such components are subject to these terms.

No TI components are authorized for use in FDA Class III (or similar life-critical medical equipment) unless authorized officers of the parties have executed a special agreement specifically governing such use.

Only those TI components which TI has specifically designated as military grade or “enhanced plastic” are designed and intended for use in military/aerospace applications or environments. Buyer acknowledges and agrees that any military or aerospace use of TI components which have ***not*** been so designated is solely at the Buyer's risk, and that Buyer is solely responsible for compliance with all legal and regulatory requirements in connection with such use.

TI has specifically designated certain components which meet ISO/TS16949 requirements, mainly for automotive use. Components which have not been so designated are neither designed nor intended for automotive use; and TI will not be responsible for any failure of such components to meet such requirements.

Products		**Applications**	
Audio	www.ti.com/audio	Automotive and Transportation	www.ti.com/automotive
Amplifiers	amplifier.ti.com	Communications and Telecom	www.ti.com/communications
Data Converters	dataconverter.ti.com	Computers and Peripherals	www.ti.com/computers
DLP® Products	www.dlp.com	Consumer Electronics	www.ti.com/consumer-apps
DSP	dsp.ti.com	Energy and Lighting	www.ti.com/energy
Clocks and Timers	www.ti.com/clocks	Industrial	www.ti.com/industrial
Interface	interface.ti.com	Medical	www.ti.com/medical
Logic	logic.ti.com	Security	www.ti.com/security
Power Mgmt	power.ti.com	Space, Avionics and Defense	www.ti.com/space-avionics-defense
Microcontrollers	microcontroller.ti.com	Video and Imaging	www.ti.com/video
RFID	www.ti-rfid.com		
OMAP Mobile Processors	www.ti.com/omap	**TI E2E Community**	e2e.ti.com
Wireless Connectivity	www.ti.com/wirelessconnectivity		

Mailing Address: Texas Instruments, Post Office Box 655303, Dallas, Texas 75265
Copyright © 2012, Texas Instruments Incorporated