- **High-Speed Quadruple Transceiver**
- **Meets or Exceeds Requirements of IEEE Std. 896.1 – 1987**
- **Drives Load Impedances as Low as 10 Ω**
- **High-Speed Advanced Low-Power Schottky Circuits**
- **Low Power Dissipation . . . 81 mW Max per Channel**
- **High-Impedance PNP Inputs**
- **BTL™ Logic Level 1-V Bus Swing Reduces Power Consumption**
- **Low Bus-Port Capacitance**
- **Power-Up/Power-Down Protection (Glitch Free)**
- **Open-Collector Driver Outputs Allows Wired-OR Connections**
- **Multiple Bus Channel Ground Returns to Reduce Channel Noise Interference**
- **Designed to be a Faster, Lower Power Functional Equivalent of the National Semiconductor DS3893**

N PACKAGE
(TOP VIEW)

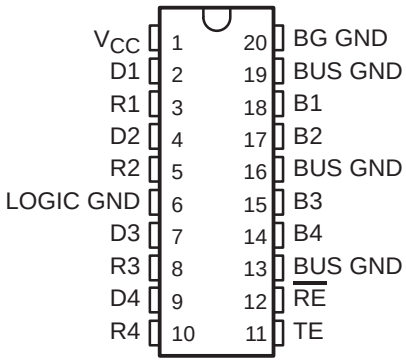

FN PACKAGE
(TOP VIEW)

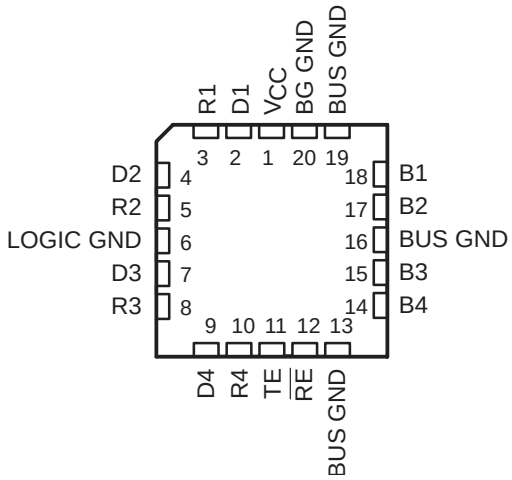

description

The SN75ALS053 is a four-channel, monolithic, high-speed, advanced low-power Schottky device designed for two-way data communication in a densely populated backplane. The SN75ALS053 has independent driver input (Dn) and receiver output (Rn) pins and separate driver and receiver disables. This transceiver is designed for use in high-speed bus systems and is similar to the SN75ALS057 transceiver except that the trapezoidal feature has been eliminated to speed up the propagation delays.

These transceivers feature open-collector driver outputs, each with a series Schottky diode to reduce capacitive loading to the bus. By using a 2-V pullup on the bus, the output signal swing will be approximately 1 V, which reduces the power necessary to drive the bus load capacitance. The driver outputs are capable of driving an equivalent dc load of as low as 10 Ω.

The receivers have a precision threshold set by an internal bandgap reference to give accurate input thresholds over V_{CC} and temperature variations.

These transceivers are compatible with Backplane Transceiver Logic (BTL™) technology at significantly reduced power dissipation per channel.

The SN75ALS053 is characterized for operation from 0° to 70°C.

Please be aware that an important notice concerning availability, standard warranty, and use in critical applications of Texas Instruments semiconductor products and disclaimers thereto appears at the end of this data sheet.

BTL and DS3893 are trademarks of National Semiconductor Corporation.

PRODUCTION DATA information is current as of publication date. Products conform to specifications per the terms of Texas Instruments standard warranty. Production processing does not necessarily include testing of all parameters.

Copyright © 1995, Texas Instruments Incorporated

FUNCTION TABLE
TRANSMIT/RECEIVE

CONTROLS		CHANNELS	
TE	$\overline{RE}$	D→B	B→R
L	L	D	R
L	H	D	D
H	L	T	R
H	H	T	D

H = high level, L = low level, R = receive, T = transmit, D = disable
Direction of data transmission is from Dn to Bn, direction of data reception is from Bn to Rn.

logic symbol†

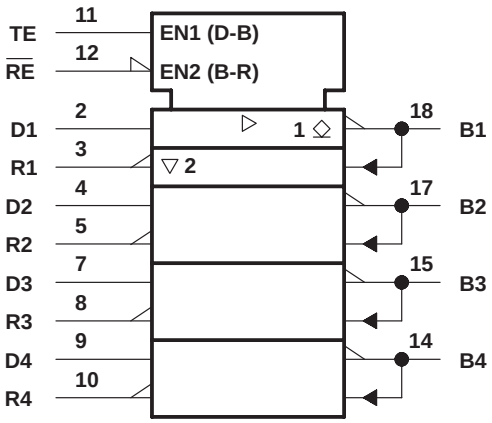

† This symbol is in accordance with ANSI/IEEE Std 91-1984 and IEC Publication 617-12.

logic diagram (positive logic)

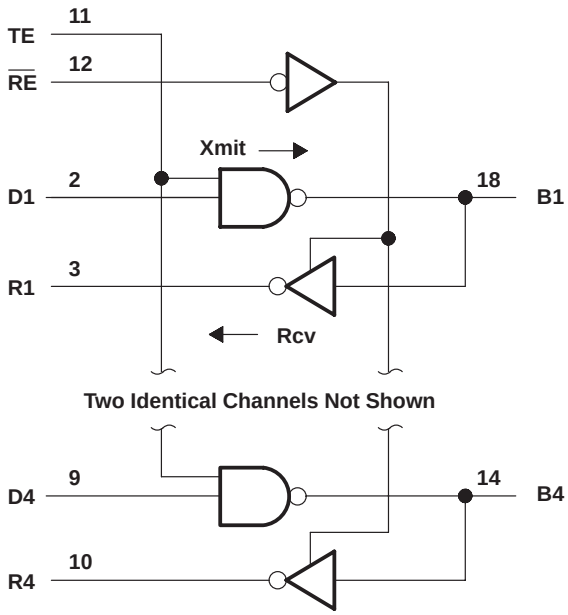

schematics of inputs and outputs

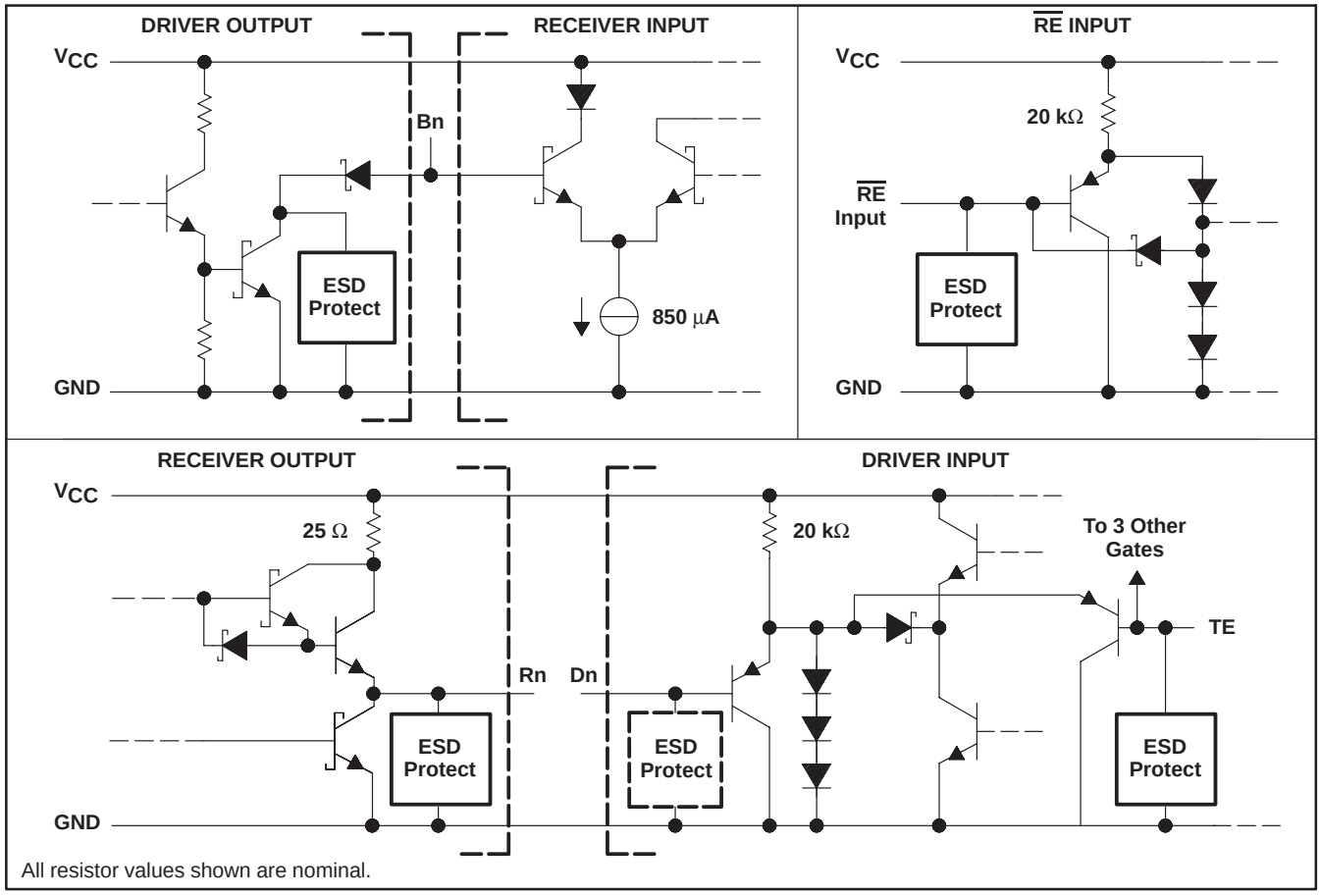

All resistor values shown are nominal.

absolute maximum ratings over operating free-air temperature range (unless otherwise noted)†

Supply voltage, V_{CC} (see Note 1)	6 V
Control input voltage, V_I	5.5 V
Driver input voltage, V_I	5.5 V
Driver output voltage, V_O	2.5 V
Receiver input voltage, V_I	2.5 V
Receiver output voltage, V_O	5.5 V
Continuous total power dissipation	See Dissipation Rating Table
Operating free-air temperature range, T_A	0°C to 70°C
Storage temperature range, T_{stg}	– 65°C to 150°C
Case temperature for 10 seconds, T_C: FN package	260°C
Lead temperature 1,6 mm (1/16 in) from case for 10 seconds: N package	260°C

† Stresses beyond those listed under “absolute maximum ratings” may cause permanent damage to the device. These are stress ratings only, and functional operation of the device at these or any other conditions beyond those indicated under “recommended operating conditions” is not implied. Exposure to absolute-maximum-rated conditions for extended periods may affect device reliability.

NOTE 1: Voltage values are with respect to network ground terminal.

DISSIPATION RATING TABLE

PACKAGE	$T_A \leq 25°C$ POWER RATING	DERATING FACTOR ABOVE $T_A = 25°C$	$T_A = 70°C$ POWER RATING
FN	1400 MW	11.2 MW/°C	896 MW
N	1150 MW	9.2 MW/°C	736 mW

recommended operating conditions

	MIN	NOM	MAX	UNIT
Supply voltage, V_{CC}	4.75	5	5.25	V
High-level driver and control input voltage, V_{IH}	2			V
Low-level driver and control input voltage, V_{IL}			0.8	V
Bus termination voltage	1.9		2.1	V
Operating free-air temperature, T_A	0		70	°C

electrical characteristics over recommended ranges of supply voltage and operating free-air temperature (unless otherwise noted)

PARAMETER			TEST CONDITIONS	MIN	TYP	MAX	UNIT
V_{IK}	Input clamp voltage at Dn, DE, or $\overline{RE}$		I_I = – 18 mA			– 1.5	V
V_{IT}	Receiver input threshold voltage at Bn			1.426		1.674	V
V_{OH}	High-level output voltage at Rn		Bn at 1.2 V, $\overline{RE}$ at 0.8 V, I_{OH} = –1 mA	2.5			V
V_{OL}	Low-level output voltage	Rn	Bn at 2 V, $\overline{RE}$ at 0.8 V, I_{OL} = 20 mA			0.5	V
		Bn	Dn at 2.4 V, TE at 2.4 V, See Figure 1, V_L = 2 V, R_L = 10 Ω	0.75		1.2	
I_{IH}	High-level input current	Dn, TE or $\overline{RE}$	$V_I = V_{CC}$			40	µA
		Bn	V_I = 2 V, V_{CC} = 0 or 5.25 V, Dn at 0.8 V, TE at 0.8 V			100	
I_{IL}	Low-level input current at Dn, TE or $\overline{RE}$		V_I = 0.4 V			– 400	µA
I_{OS}	Short-circuit output at Rn		Rn at 0 V, Bn at 1.2 V, $\overline{RE}$ at 0.8 V	– 70		– 200	mA
I_{CC}	Supply current					65	mA
$C_{o(B)}$	Driver output capacitance		V_{CC} = 5 V, T_A = 25°C		6.5		pF

switching characteristics over recommended ranges of supply voltage and operating free-air temperature

driver

PARAMETER		FROM (INPUT)	TO (OUTPUT)	TEST CONDITIONS	MIN	MAX	UNIT
t_{PLH}	Propagation delay time low-to-high-level output	Dn	Bn	TE at 3 V, V_L = 2 V, See Figure 2	2	7	ns
t_{PHL}	Propagation delay time high-to-low-level output				2	7	
t_{PLH}	Propagation delay time low-to-high-level output	Dn	Bn	Dn at 3 V, V_L = 2 V, See Figure 2	2	7	ns
t_{PHL}	Propagation delay time high-to-low-level output				2	7	
t_{TLH}	Transition time, low-to-high-level output	Dn	Bn	TE at 3 V, V_L = 2 V, See Figure 2	0.5	5	ns
t_{THL}	Transition time, high-to-low-level output				0.5	5	
	Skew between driver channels†	Dn	Bn	TE at 3 V, V_L = 2 V		1	ns

receiver

PARAMETER		FROM (INPUT)	TO (OUTPUT)	TEST CONDITIONS	MIN	MAX	UNIT
t_{PLH}	Propagation delay time, low-to-high-level output	Bn	Rn	$\overline{RE}$ at 0.3 V, TE at 0.3 V	2	8	ns
t_{PHL}	Propagation delay time, high-to-low-level output				2	8	
t_{PLZ}	Output disable time from low level	$\overline{RE}$	Rn	Bn at 2 V, TE at 0.3 V, V_L = 5 V, C_L = 5 pF, R_L1 = 500 Ω, See Figure 4		6	ns
t_{PZL}	Output enable time to low level	$\overline{RE}$	Rn	Bn at 2 V, TE at 0.3 V, V_L = 5 V, C_L = 5 pF, R_L1 = 500 Ω, See Figure 4		12	ns
t_{PHZ}	Output disable time from high level	$\overline{RE}$	Rn	Bn at 1 V, TE at 0.3 V, V_L = 0, C_L = 5 pF, R_L1 = 500 Ω, See Figure 4		6	ns
t_{PZH}	Output enable time to high level	$\overline{RE}$	Rn	Bn at 1 V, TE at 0.3 V, V_L = 0, C_L = 5 pF, R_L1 = 500 Ω, See Figure 4		12	ns
	Skew between receiver channels†	Bn	Rn	$\overline{RE}$ at 0.3 V, TE at 0.3 V		1	ns

† Skew is the difference between the propagation delay time (t_{PLH} or t_{PHL}) of one receiver channel and that same propagation delay time of any other receiver channel. It applies for both t_{PLH} and t_{PHL}.

PARAMETER MEASUREMENT INFORMATION

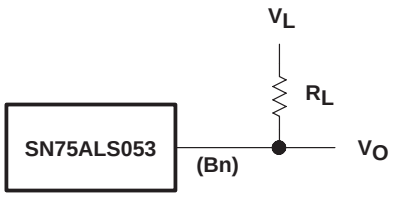

Figure 1. Driver Low-Level-Output-Voltage Test Circuit

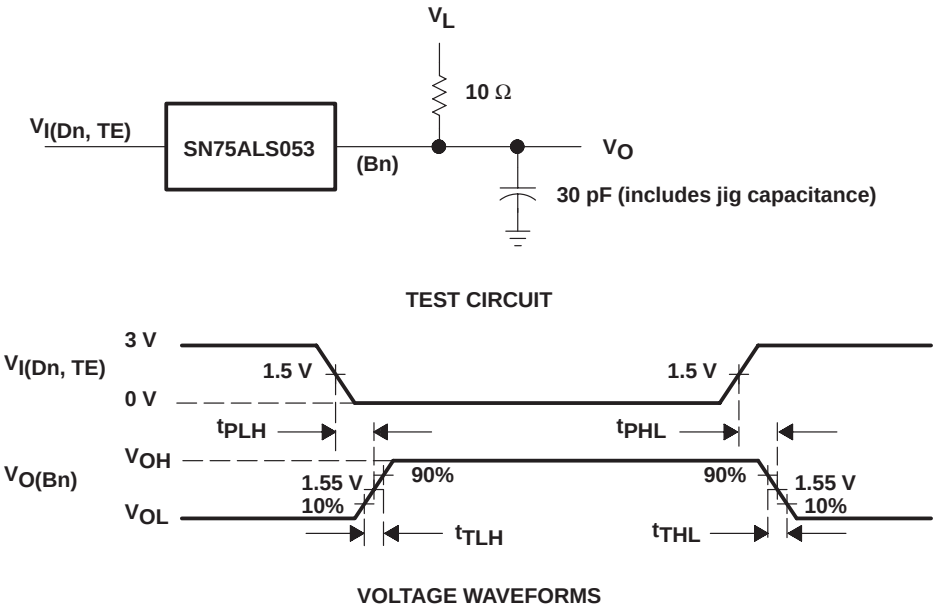

NOTE: $t_r = t_f \leq 5$ ns from 10% to 90%

Figure 2. Driver Test Circuit and Voltage Waveforms

PARAMETER MEASUREMENT INFORMATION

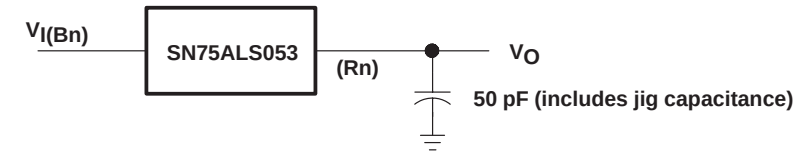

TEST CIRCUIT

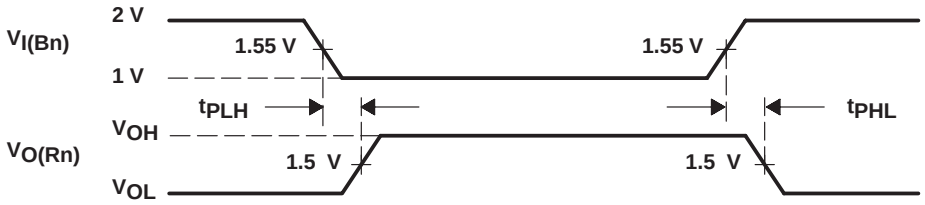

VOLTAGE WAVEFORMS

NOTE: $t_r = t_f \leq 10$ ns from 10% to 90%

Figure 3. Receiver Test Circuit and Voltage Waveforms

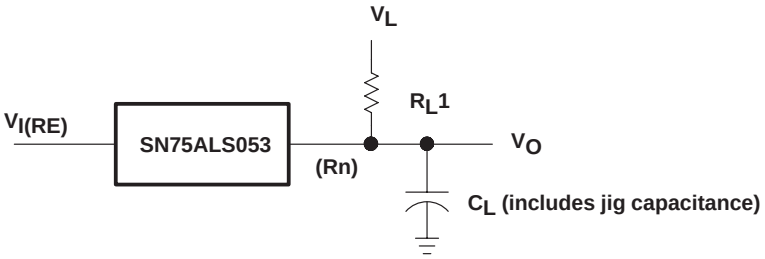

TEST CIRCUIT

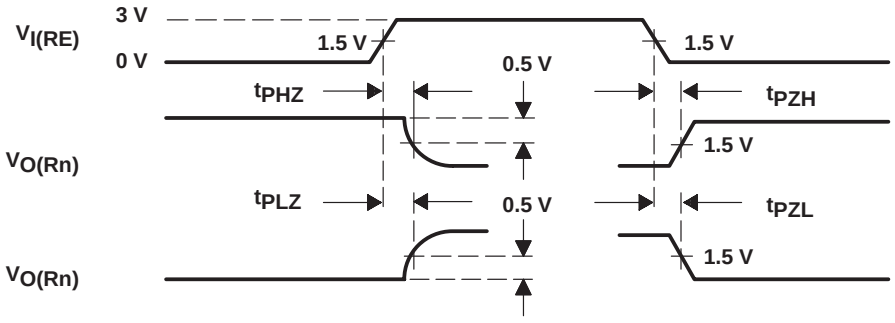

VOLTAGE WAVEFORMS

NOTE: $t_r = t_f \leq 5$ ns from 10% to 90%

Figure 4. Test CIrcuit and Voltage Waveforms From $\overline{RE}$ to Rn

PACKAGING INFORMATION

Orderable Device	Status [1]	Package Type	Package Drawing	Pins	Package Qty	Eco Plan [2]	Lead/Ball Finish	MSL Peak Temp [3]
SN75ALS053FN	OBSOLETE	PLCC	FN	20		TBD	Call TI	Call TI
SN75ALS053FNR	OBSOLETE	PLCC	FN	20		TBD	Call TI	Call TI
SN75ALS053N	OBSOLETE	PDIP	N	20		TBD	Call TI	Call TI

[1] The marketing status values are defined as follows:
ACTIVE: Product device recommended for new designs.
LIFEBUY: TI has announced that the device will be discontinued, and a lifetime-buy period is in effect.
NRND: Not recommended for new designs. Device is in production to support existing customers, but TI does not recommend using this part in a new design.
PREVIEW: Device has been announced but is not in production. Samples may or may not be available.
OBSOLETE: TI has discontinued the production of the device.

[2] Eco Plan - The planned eco-friendly classification: Pb-Free (RoHS) or Green (RoHS & no Sb/Br) - please check http://www.ti.com/productcontent for the latest availability information and additional product content details.
TBD: The Pb-Free/Green conversion plan has not been defined.
Pb-Free (RoHS): TI's terms "Lead-Free" or "Pb-Free" mean semiconductor products that are compatible with the current RoHS requirements for all 6 substances, including the requirement that lead not exceed 0.1% by weight in homogeneous materials. Where designed to be soldered at high temperatures, TI Pb-Free products are suitable for use in specified lead-free processes.
Green (RoHS & no Sb/Br): TI defines "Green" to mean Pb-Free (RoHS compatible), and free of Bromine (Br) and Antimony (Sb) based flame retardants (Br or Sb do not exceed 0.1% by weight in homogeneous material)

[3] MSL, Peak Temp. -- The Moisture Sensitivity Level rating according to the JEDEC industry standard classifications, and peak solder temperature.

Important Information and Disclaimer: The information provided on this page represents TI's knowledge and belief as of the date that it is provided. TI bases its knowledge and belief on information provided by third parties, and makes no representation or warranty as to the accuracy of such information. Efforts are underway to better integrate information from third parties. TI has taken and continues to take reasonable steps to provide representative and accurate information but may not have conducted destructive testing or chemical analysis on incoming materials and chemicals. TI and TI suppliers consider certain information to be proprietary, and thus CAS numbers and other limited information may not be available for release.

In no event shall TI's liability arising out of such information exceed the total purchase price of the TI part(s) at issue in this document sold by TI to Customer on an annual basis.

N (R–PDIP–T**)

PLASTIC DUAL–IN–LINE PACKAGE

16 PINS SHOWN

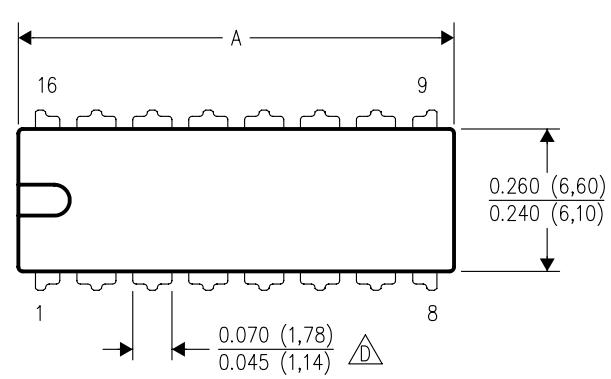

DIM \ PINS **	14	16	18	20
A MAX	0.775 (19,69)	0.775 (19,69)	0.920 (23,37)	1.060 (26,92)
A MIN	0.745 (18,92)	0.745 (18,92)	0.850 (21,59)	0.940 (23,88)
MS–001 VARIATION (C)	AA	BB	AC	AD

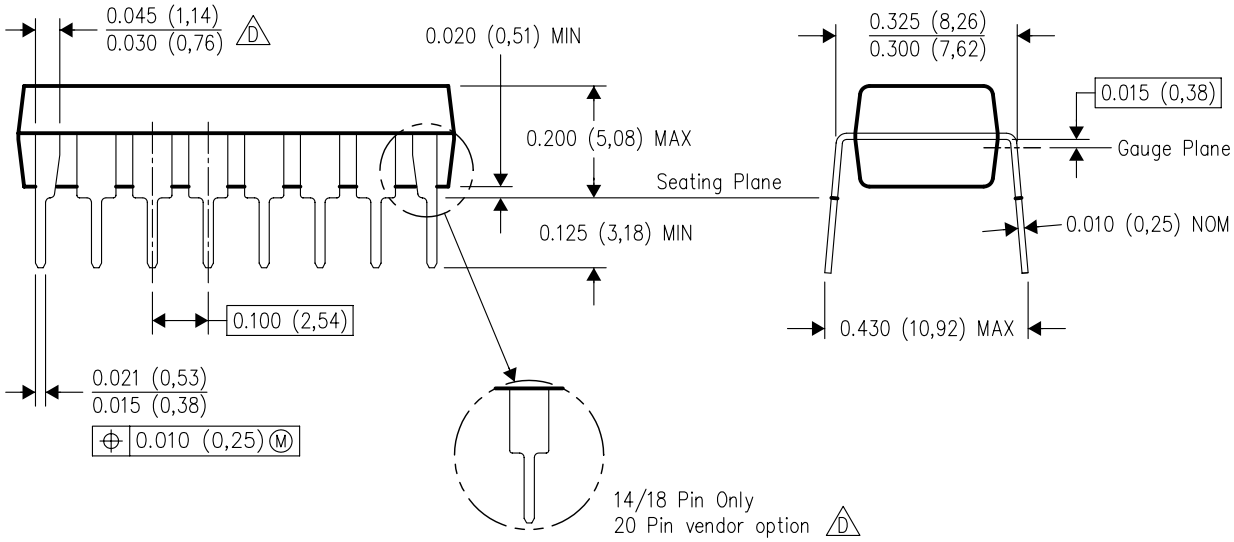

4040049/E 12/2002

NOTES:
A. All linear dimensions are in inches (millimeters).
B. This drawing is subject to change without notice.
C. Falls within JEDEC MS–001, except 18 and 20 pin minimum body length (Dim A).
D. The 20 pin end lead shoulder width is a vendor option, either half or full width.

MPLC004A – OCTOBER 1994

FN (S-PQCC-J**)

PLASTIC J-LEADED CHIP CARRIER

20 PIN SHOWN

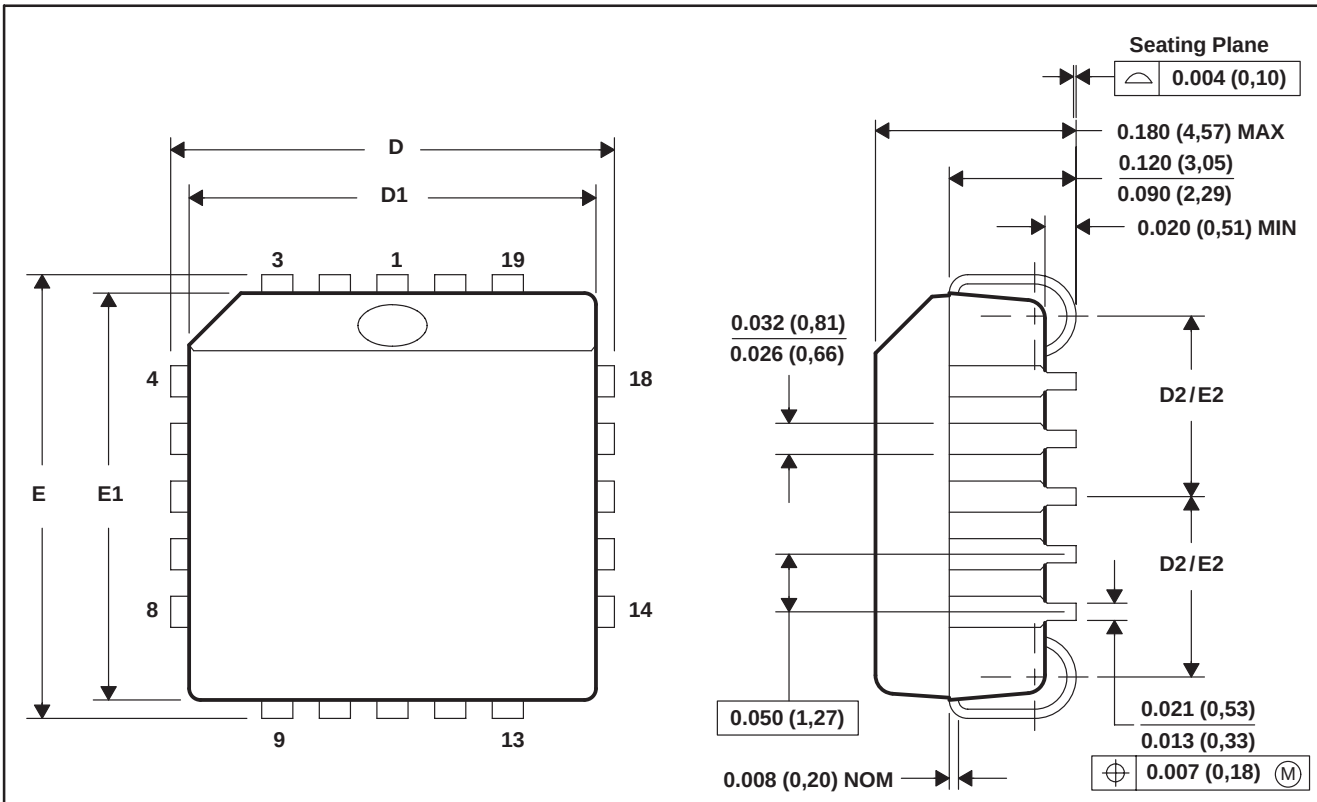

NO. OF PINS **	D/E		D1/E1		D2/E2	
	MIN	MAX	MIN	MAX	MIN	MAX
20	0.385 (9,78)	0.395 (10,03)	0.350 (8,89)	0.356 (9,04)	0.141 (3,58)	0.169 (4,29)
28	0.485 (12,32)	0.495 (12,57)	0.450 (11,43)	0.456 (11,58)	0.191 (4,85)	0.219 (5,56)
44	0.685 (17,40)	0.695 (17,65)	0.650 (16,51)	0.656 (16,66)	0.291 (7,39)	0.319 (8,10)
52	0.785 (19,94)	0.795 (20,19)	0.750 (19,05)	0.756 (19,20)	0.341 (8,66)	0.369 (9,37)
68	0.985 (25,02)	0.995 (25,27)	0.950 (24,13)	0.958 (24,33)	0.441 (11,20)	0.469 (11,91)
84	1.185 (30,10)	1.195 (30,35)	1.150 (29,21)	1.158 (29,41)	0.541 (13,74)	0.569 (14,45)

4040005/B 03/95

NOTES: A. All linear dimensions are in inches (millimeters).
B. This drawing is subject to change without notice.
C. Falls within JEDEC MS-018

IMPORTANT NOTICE

Texas Instruments Incorporated and its subsidiaries (TI) reserve the right to make corrections, modifications, enhancements, improvements, and other changes to its products and services at any time and to discontinue any product or service without notice. Customers should obtain the latest relevant information before placing orders and should verify that such information is current and complete. All products are sold subject to TI's terms and conditions of sale supplied at the time of order acknowledgment.

TI warrants performance of its hardware products to the specifications applicable at the time of sale in accordance with TI's standard warranty. Testing and other quality control techniques are used to the extent TI deems necessary to support this warranty. Except where mandated by government requirements, testing of all parameters of each product is not necessarily performed.

TI assumes no liability for applications assistance or customer product design. Customers are responsible for their products and applications using TI components. To minimize the risks associated with customer products and applications, customers should provide adequate design and operating safeguards.

TI does not warrant or represent that any license, either express or implied, is granted under any TI patent right, copyright, mask work right, or other TI intellectual property right relating to any combination, machine, or process in which TI products or services are used. Information published by TI regarding third-party products or services does not constitute a license from TI to use such products or services or a warranty or endorsement thereof. Use of such information may require a license from a third party under the patents or other intellectual property of the third party, or a license from TI under the patents or other intellectual property of TI.

Reproduction of information in TI data books or data sheets is permissible only if reproduction is without alteration and is accompanied by all associated warranties, conditions, limitations, and notices. Reproduction of this information with alteration is an unfair and deceptive business practice. TI is not responsible or liable for such altered documentation.

Resale of TI products or services with statements different from or beyond the parameters stated by TI for that product or service voids all express and any implied warranties for the associated TI product or service and is an unfair and deceptive business practice. TI is not responsible or liable for any such statements.

Following are URLs where you can obtain information on other Texas Instruments products and application solutions:

Products		**Applications**	
Amplifiers	amplifier.ti.com	Audio	www.ti.com/audio
Data Converters	dataconverter.ti.com	Automotive	www.ti.com/automotive
DSP	dsp.ti.com	Broadband	www.ti.com/broadband
Interface	interface.ti.com	Digital Control	www.ti.com/digitalcontrol
Logic	logic.ti.com	Military	www.ti.com/military
Power Mgmt	power.ti.com	Optical Networking	www.ti.com/opticalnetwork
Microcontrollers	microcontroller.ti.com	Security	www.ti.com/security
		Telephony	www.ti.com/telephony
		Video & Imaging	www.ti.com/video
		Wireless	www.ti.com/wireless

Mailing Address: Texas Instruments
Post Office Box 655303 Dallas, Texas 75265

Copyright © 2005, Texas Instruments Incorporated