- **512 × 18-Bit Organization Array (SN74V215)**
- **1024 × 18-Bit Organization Array (SN74V225)**
- **2048 × 18-Bit Organization Array (SN74V235)**
- **4096 × 18-Bit Organization Array (SN74V245)**
- **7.5-ns Read/Write Cycle Time**
- **3.3-V V_{CC}, 5-V Input Tolerant**
- **First-Word or Standard Fall-Through Timing**
- **Single or Double Register-Buffered Empty and Full Flags**
- **Easily Expandable in Depth and Width**
- **Asynchronous or Coincident Read and Write Clocks**
- **Asynchronous or Synchronous Programmable Almost-Empty and Almost-Full Flags With Default Settings**
- **Half-Full Flag Capability**
- **Output Enable Puts Output Data Bus in High-Impedance State**
- **High-Performance Submicron CMOS Technology**
- **Packaged in 64-Pin Thin Quad Flat Package**
- **DSP and Microprocessor Interface Control Logic**
- **Provide a DSP Glueless Interface to Texas Instruments TMS320™ DSPs**

description

The SN74V215, SN74V225, SN74V235, and SN74V245 are very high-speed, low-power CMOS clocked first-in first-out (FIFO) memories. They support clock frequencies up to 133 MHz and have read-access times as fast as 5 ns. These DSP-Sync™ FIFO memories feature read and write controls for use in applications such as DSP-to-processor communication, DSP-to-analog front end (AFE) buffering, network, video, and data communications.

These are synchronous FIFOs, which means each port employs a synchronous interface. All data transfers through a port are gated to the low-to-high transition of a continuous (free-running) port clock by enable signals. The continuous clocks for each port are independent of one another and can be asynchronous or coincident. The enables for each port are arranged to provide a simple interface between DSPs, microprocessors, and/or buses controlled by a synchronous interface. An output-enable ($\overline{OE}$) input controls the 3-state output.

The synchronous FIFOs have two fixed flags, empty flag/output ready ($\overline{EF}$/$\overline{OR}$) and full flag/input ready ($\overline{FF}$/$\overline{IR}$), and two programmable flags, almost-empty ($\overline{PAE}$) and almost-full ($\overline{PAF}$). The offset loading of the programmable flags is controlled by a simple state machine, and is initiated by asserting the load pin ($\overline{LD}$). A half-full flag ($\overline{HF}$) is available when the FIFO is used in a single-device configuration.

Two timing modes of operation are possible with these devices: first-word fall-through (FWFT) mode and standard mode.

In FWFT mode, the first word written to an empty FIFO is clocked directly to the data output lines after three transitions of the RCLK signal. A read enable ($\overline{REN}$) does not have to be asserted for accessing the first word.

In standard mode, the first word written to an empty FIFO does not appear on the data output lines unless a specific read operation is performed. A read operation, which consists of activating $\overline{REN}$ and enabling a rising RCLK edge, shifts the word from internal memory to the data output lines.

These devices are depth expandable, using a daisy-chain technique or FWFT mode. The $\overline{XI}$ and $\overline{XO}$ pins are used to expand the FIFOs. In depth-expansion configuration, first load ($\overline{FL}$) is grounded on the first device and set to high for all other devices in the daisy chain.

The SN74V215, SN74V225, SN74V235, and SN74V245 are characterized for operation from 0°C to 70°C.



Please be aware that an important notice concerning availability, standard warranty, and use in critical applications of Texas Instruments semiconductor products and disclaimers thereto appears at the end of this data sheet.

DSP-SYNC and TMS320 are trademarks of Texas Instruments.

PRODUCTION DATA information is current as of publication date. Products conform to specifications per the terms of Texas Instruments standard warranty. Production processing does not necessarily include testing of all parameters.

Copyright © 2002, Texas Instruments Incorporated

PAG PACKAGE
(TOP VIEW)

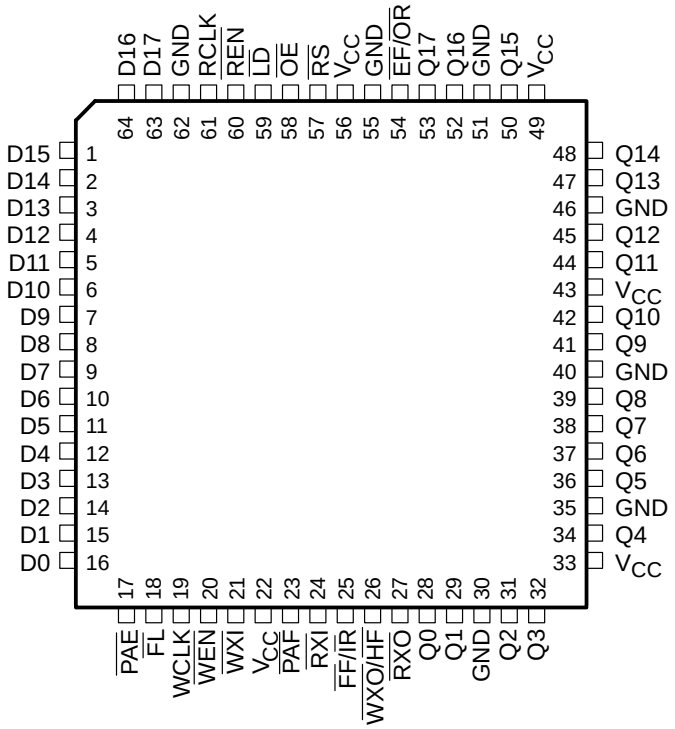

functional block diagram

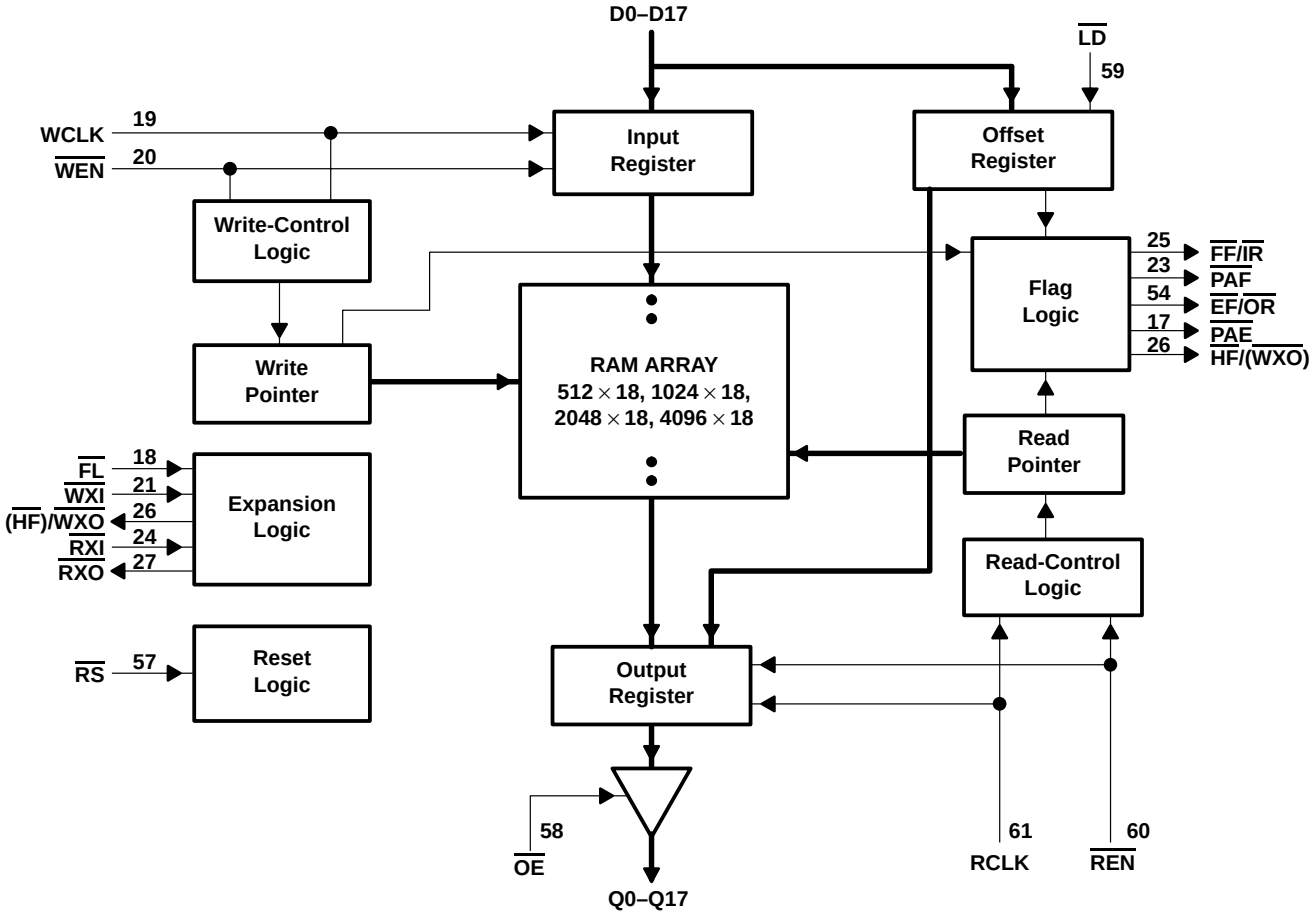

Terminal Functions

TERMINAL NAME	TERMINAL NO.	I/O	DESCRIPTION
D0–D17	1–16, 63, 64	I	Data inputs. Data inputs for an 18-bit bus.
$\overline{EF}/\overline{OR}$	54	O	Memory-empty/valid-data-available flag. In the standard mode, the $\overline{EF}$ function is selected. $\overline{EF}$ indicates whether the FIFO memory is empty. In FWFT mode, the $\overline{OR}$ function is selected. $\overline{OR}$ indicates whether there is valid data available at the outputs.
$\overline{FF}/\overline{IR}$	25	O	Memory-full/space-available flag. In the standard mode, the $\overline{FF}$ function is selected. $\overline{FF}$ indicates whether the FIFO memory is full. In the FWFT mode, the $\overline{IR}$ function is selected. $\overline{IR}$ indicates whether there is space available for writing to the FIFO memory.
$\overline{FL}$	18	I	Mode selection. In the single-device or width-expansion configuration, $\overline{FL}$, together with $\overline{WXI}$ and $\overline{RXI}$, determines if the mode is standard mode or first-word fall-through (FWFT) mode, as well as whether the $\overline{PAE}/\overline{PAF}$ flags are synchronous or asynchronous (see Table 4). In the daisy-chain depth-expansion configuration, $\overline{FL}$ is grounded on the first device (first-load device) and set to high for all other devices in the daisy chain.
GND	30, 35, 40, 46, 51, 55, 62		Ground
$\overline{LD}$	59	I	Read/write control. When $\overline{LD}$ is low, data on the inputs D0–D11 is written to the offset and depth registers on the low-to-high transition of the WCLK, when $\overline{WEN}$ is low. When $\overline{LD}$ is low, data on the outputs Q0–Q11 is read from the offset and depth registers on the low-to-high transition of RCLK when $\overline{REN}$ is low.
$\overline{OE}$	58	I	Output enable. When $\overline{OE}$ is low, the data output bus is active. If $\overline{OE}$ is high, the output data bus is in the high-impedance state.
$\overline{PAE}$	17	O	Programable almost-empty flag. When $\overline{PAE}$ is low, the FIFO is almost empty, based on the offset programmed into the FIFO. The default offset at reset is 63 from empty for SN74V215, and 127 from empty for SN74V225, SN74V235, and SN74V245.
$\overline{PAF}$	23	O	Programable almost-full flag. When $\overline{PAF}$ is low, the FIFO is almost full, based on the offset programmed into the FIFO. The default offset at reset is 63 from full for SN74V215, and 127 from full for SN74V225, SN74V235, and SN74V245.
Q0–Q17	28, 29, 31, 32, 34, 36–39, 41, 42, 44, 45, 47, 48, 50, 52, 53	O	Data outputs. Data outputs for an 18-bit bus.
RCLK	61	I	Read clock. When $\overline{REN}$ is low, data is read from the FIFO on a low-to-high transition of RCLK, if the FIFO is not empty.
$\overline{REN}$	60	I	Read enable. When $\overline{REN}$ is low, data is read from the FIFO on every low-to-high transition of RCLK. When $\overline{REN}$ is high, the output register holds the previous data. Data is not read from the FIFO if $\overline{EF}$ is low.
$\overline{RS}$	57	I	Reset. When $\overline{RS}$ is set low, internal read and write pointers are set to the first location of the RAM array, $\overline{FF}$ and $\overline{PAF}$ go high, and $\overline{PAE}$ and $\overline{EF}$ go low. A reset is required before an initial write after power up.
$\overline{RXI}$	24	I	Read expansion. In the single-device or width-expansion configuration, $\overline{RXI}$, together with $\overline{FL}$ and $\overline{WXI}$, determines if the mode is standard mode or FWFT mode, as well as whether the $\overline{PAE}/\overline{PAF}$ flags are synchronous or asynchronous (see Table 4). In the daisy-chain depth-expansion configuration, $\overline{RXI}$ is connected to $\overline{RXO}$ (read expansion out) of the previous device.
$\overline{RXO}$	27	O	Last-location-read flag. In the depth-expansion configuration, a pulse is sent from $\overline{RXO}$ to $\overline{RXI}$ of the next device when the last location in the FIFO is read.
V_{CC}	22, 33, 43, 49, 56		Supply voltage. +3.3-V power-supply pins.
WCLK	19	I	Write clock. When $\overline{WEN}$ is low, data is written into the FIFO on a low-to-high transition of WCLK if the FIFO is not full.

Terminal Functions (Continued)

TERMINAL NAME	TERMINAL NO.	I/O	DESCRIPTION
$\overline{WEN}$	20	I	Write enable. When $\overline{WEN}$ is low, data is written into the FIFO on every low-to-high transition of WCLK. When $\overline{WEN}$ is high, the FIFO holds the previous data. Data is not written into the FIFO if $\overline{FF}$ is low.
$\overline{WXI}$	21	I	Width expansion. In the single-device or width-expansion configuration, $\overline{WXI}$, together with $\overline{FL}$ and $\overline{RXI}$, determines if the mode is standard mode or FWFT mode, as well as whether the $\overline{PAE}$/$\overline{PAF}$ flags are synchronous or asynchronous (see Table 4). In the daisy-chain depth-expansion configuration, $\overline{WXI}$ is connected to $\overline{WXO}$ (write expansion out) of the previous device.
$\overline{WXO}$/$\overline{HF}$	26	O	Half-full flag. In the single-device or width-expansion configuration, the device is more than half full when $\overline{HF}$ is low. In the depth-expansion configuration, a pulse is sent from $\overline{WXO}$ to $\overline{WXI}$ of the next device when the last location in the FIFO is written.

detailed description

INPUTS:

DATA IN (D0–D17)

Data inputs for 18-bit-wide data.

CONTROLS:

RESET ($\overline{RS}$)

Reset is accomplished when $\overline{RS}$ is taken low. During reset, both internal read and write pointers are set to the first location. A reset is required after power up before a write operation can take place. The half-full flag ($\overline{HF}$) and programmable almost-full flag ($\overline{PAF}$) is reset to high after t_{RSF}. The programmable almost-empty flag ($\overline{PAE}$) is reset to low after t_{RSF}. The full flag ($\overline{FF}$) resets to high. The empty flag ($\overline{EF}$) resets to low in standard mode, but resets to high in FWFT mode. During reset, the output register is initialized to all zeros, and the offset registers are initialized to their default values.

WRITE CLOCK (WCLK)

A write cycle is initiated on the low-to-high transition of WCLK. Data setup and hold times must be met with respect to the low-to-high transition of WCLK.

The write and read clocks can be asynchronous or coincident.

WRITE ENABLE ($\overline{WEN}$)

When $\overline{WEN}$ is low, data can be loaded into the FIFO RAM array on the rising edge of every WCLK cycle if the device is not full. Data is stored in the RAM array sequentially and independently of any ongoing read operation.

When $\overline{WEN}$ is high, no new data is written in the RAM array on each WCLK cycle.

To prevent data overflow in the standard mode, $\overline{FF}$ goes low, inhibiting further write operations. Upon completion of a valid read cycle, $\overline{FF}$ goes high, allowing a write to occur. The $\overline{FF}$ flag is updated on the rising edge of WCLK.

To prevent data overflow in the FWFT mode, $\overline{IR}$ goes high, inhibiting further write operations. Upon completion of a valid read cycle, $\overline{IR}$ goes low, allowing a write to occur. The $\overline{IR}$ flag is updated on the rising edge of WCLK.

$\overline{WEN}$ is ignored when the FIFO is full in either FWFT or standard mode.

READ CLOCK (RCLK)

Data can be read on the outputs on the low-to-high transition of RCLK when $\overline{OE}$ is low.

The write and read clocks can be asynchronous or coincident.

detailed description (continued)

READ ENABLE ($\overline{REN}$)

When $\overline{REN}$ is low, data is loaded from the RAM array into the output register on the rising edge of every RCLK cycle if the device is not empty.

When $\overline{REN}$ is high, the output register holds the previous data and no new data is loaded into the output register. Data outputs Q0–Qn maintain the previous data value.

In the standard mode, every word accessed at Qn, including the first word written to an empty FIFO, must be requested using $\overline{REN}$. When the last word has been read from the FIFO, the empty flag ($\overline{EF}$) goes low, inhibiting further read operations. $\overline{REN}$ is ignored when the FIFO is empty. After a write is performed, $\overline{EF}$ goes high, allowing a read to occur. The $\overline{EF}$ flag is updated on the rising edge of RCLK.

In the FWFT mode, the first word written to an empty FIFO automatically goes to the outputs Qn, on the third valid low-to-high transition of RCLK + t_{SKEW} after the first write. $\overline{REN}$ need not be asserted low. To access all other words, a read must be executed using $\overline{REN}$. The RCLK low-to-high transition after the last word has been read from the FIFO, output ready ($\overline{OR}$) goes high with a true read (RCLK with $\overline{REN}$ low), inhibiting further read operations. $\overline{REN}$ is ignored when the FIFO is empty.

OUTPUT ENABLE ($\overline{OE}$)

When $\overline{OE}$ is low, the parallel output buffers transmit data from the output register. When $\overline{OE}$ is high, the Q-output data bus is in the high-impedance state.

LOAD ($\overline{LD}$)

The SN74V215, SN74V225, SN74V235, and SN74V245 devices contain two 12-bit offset registers with data on the inputs, or read on the outputs. When $\overline{LD}$ is low and $\overline{WEN}$ is low, data on the inputs D0–D11 is written into the empty offset register on the first low-to-high transition of the write clock (WCLK). When $\overline{LD}$ and $\overline{WEN}$ are held low, data is written into the full offset register on the second low-to-high transition of WCLK (see Tables 1 and 2). The third transition of WCLK again writes to the empty-offset register.

However, writing to all offset registers need not occur at one time. One or two offset registers can be written and then, by bringing $\overline{LD}$ high, the FIFO is returned to normal read/write operation. When $\overline{LD}$ is low, and $\overline{WEN}$ is low, the next offset register in sequence is written.

Table 1. Writing to Offset Registers

$\overline{LD}$	$\overline{WEN}$	WCLK	SELECTION†
L	L	↑	Writing to offset registers: Empty offset Full offset
L	H	↑	No operation
H	L	↑	Write into FIFO
H	H	↑	No operation

† The same selection sequence applies to reading from the registers. $\overline{REN}$ is enabled and read is performed on the low-to-high transition of RCLK.

detailed description (continued)

Table 2. Offset Register Location and Default Values†

17	12	11	0
Not used		Empty Offset Register	
		Default Value 003FH (74V215): 007FH (74V225/74V235/74V245)	

17	12	11	0
Not used		Full Offset Register	
		Default Value 003FH (74V215): 007FH (74V225/74V235/74V245)	

† Any bits of the offset register not being programmed should be set to zero.

When $\overline{LD}$ is low and $\overline{WEN}$ is high, the WCLK input is disabled; then, a signal at this input can neither increment the write-offset-register pointer, nor execute a write.

The contents of the offset registers can be read on the output lines when $\overline{LD}$ is low and $\overline{REN}$ is low; then, data can be read on the low-to-high transition of RCLK. Reading the control registers employs a dedicated read-offset-register pointer. (The read and write pointers operate independently.) Offset register content can be read out in the standard mode only. It is inhibited in the FWFT mode.

A read from and a write to the offset registers should not be performed simultaneously.

FIRST LOAD ($\overline{FL}$)

For the single-device mode, see Table 5 for additional information. In the daisy-chain depth-expansion configuration, $\overline{FL}$ is grounded to indicate it is the first device loaded and is set high for all other devices in the daisy chain (see *Operating Configurations* for further details).

WRITE EXPANSION INPUT ($\overline{WXI}$)

This is a dual-purpose pin. For single-device mode, see Table 5 for additional information. $\overline{WXI}$ is connected to write expansion out ($\overline{WXO}$) of the previous device in the daisy-chain depth-expansion mode.

READ EXPANSION INPUT ($\overline{RXI}$)

This is a dual-purpose pin. For single-device mode, see Table 5 for additional information. $\overline{RXI}$ is connected to read expansion out ($\overline{RXO}$) of the previous device in the daisy-chain depth-expansion mode.

OUTPUTS:

FULL FLAG/INPUT READY ($\overline{FF}$/$\overline{IR}$)

This is a dual-purpose pin. In FWFT mode, the input ready ($\overline{IR}$) function is selected. $\overline{IR}$ goes low when memory space is available for writing data. When there is no free space left, $\overline{IR}$ goes high, inhibiting further write operations.

In standard mode, the $\overline{FF}$ function is selected. When the FIFO is full, $\overline{FF}$ goes low, inhibiting further write operations. When $\overline{FF}$ is high, the FIFO is not full. If no reads are performed after a reset, $\overline{FF}$ goes low after D writes to the FIFO. D = 512 for the SN74V215, 1024 for the SN74V225, 2048 for the SN74V235, and 4096 for the SN74V245.

$\overline{IR}$ goes high after D writes to the FIFO. D = 513 for the SN74V215, 1025 for the SN74V225, 2049 for the SN74V235, and 4097 for the SN74V245. The additional word in FWFT mode is due to the capacity of the memory plus output register.

$\overline{FF}$/$\overline{IR}$ is synchronous and updated on the rising edge of WCLK.

detailed description (continued)

EMPTY FLAG/OUTPUT READY ($\overline{EF}$/$\overline{OR}$)

This is a dual-purpose pin. In FWFT mode, the $\overline{OR}$ function is selected. $\overline{OR}$ goes low at the same time the first word written to an empty FIFO appears valid on the outputs. $\overline{OR}$ stays low after the RCLK low-to-high transition that shifts the last word from the FIFO memory to the outputs. $\overline{OR}$ goes high only with a true read (RCLK with $\overline{REN}$ low). The previous data stays at the outputs, indicating that the last word was read. Further data reads are inhibited until $\overline{OR}$ goes low again.

In the standard mode, the $\overline{EF}$ function is selected. When the FIFO is empty, $\overline{EF}$ goes low, inhibiting further read operations. When $\overline{EF}$ is high, the FIFO is not empty.

$\overline{EF}$/$\overline{OR}$ is synchronous and updated on the rising edge of RCLK.

PROGRAMMABLE ALMOST-FULL FLAG ($\overline{PAF}$)

$\overline{PAF}$ goes low when the FIFO reaches the almost-full condition. In FWFT mode, if no reads are performed, $\overline{PAF}$ goes low after 513 – m for the SN74V215, 1025 for the SN74V225, 2049 for the SN74V235, and 4097 for the SN74V245. Default values for m are in Table 3 and Table 4.

In standard mode, if no reads are performed after reset ($\overline{RS}$), $\overline{PAF}$ goes low after (512 – m) writes for the SN74V215, (1024 – m) writes for the SN74V225, (2048 – m) writes for the SN74V235, and (4096 – m) writes for the SN74V245. The offset m is defined in the full offset register.

If asynchronous $\overline{PAF}$ configuration is selected, $\overline{PAF}$ is asserted low on the low-to-high transition of WCLK. $\overline{PAF}$ is reset to high on the low-to-high transition of RCLK. If synchronous $\overline{PAF}$ configuration is selected (see Table 5), $\overline{PAF}$ is updated on the rising edge of WCLK.

PROGRAMMABLE ALMOST-EMPTY FLAG ($\overline{PAE}$)

$\overline{PAE}$ goes low when the FIFO reaches the almost-empty condition. In FWFT mode, $\overline{PAE}$ goes low when there are n + 1 words, or fewer, in the FIFO. In standard mode, $\overline{PAE}$ goes low when there are n words or fewer in the FIFO. The offset n is defined as the empty offset. The default values for n are noted in Table 3 and Table 4.

If there is no empty offset specified, $\overline{PAE}$ is low when the device is 63 away from completely empty for SN74V215, and 127 away from completely empty for SN74V225, SN74V235, and SN74V245.

If asynchronous $\overline{PAE}$ configuration is selected, $\overline{PAE}$ is asserted low on the low-to-high transition of the read clock (RCLK). $\overline{PAE}$ is reset to high on the low-to-high transition of the write clock (WCLK). If synchronous $\overline{PAE}$ configuration is selected (see Table 5), $\overline{PAE}$ is updated on the rising edge of RCLK.

WRITE EXPANSION OUT/HALF-FULL FLAG ($\overline{WXO}$/$\overline{HF}$)

This is a dual-purpose output. In the single-device and width-expansion mode, when write expansion in ($\overline{WXI}$) and/or read expansion in ($\overline{RXI}$) are grounded, this output acts as an indication of a half-full memory.

After one-half of the memory is filled, and at the low-to-high transition of the next write cycle, the half-full flag ($\overline{HF}$) goes low and remains set until the difference between the write pointer and read pointer is less than or equal to one-half of the total memory of the device. $\overline{HF}$ is then reset to high by the low-to-high transition of the read clock (RCLK). $\overline{HF}$ is asynchronous.

In the daisy-chain depth-expansion mode, $\overline{WXI}$ is connected to $\overline{WXO}$ of the previous device. This output acts as a signal to the next device in the daisy chain by providing a pulse when the previous device writes to the last location of memory.

READ EXPANSION OUT ($\overline{RXO}$)

In the daisy-chain depth-expansion configuration, read expansion in ($\overline{RXI}$) is connected to read expansion out ($\overline{RXO}$) of the previous device. This output acts as a signal to the next device in the daisy chain by providing a pulse when the previous device reads from the last location of memory.

detailed description (continued)

DATA OUTPUTS (Q0–Q17)

Q0–Q17 are data outputs for 18-bit-wide data.

functional description

TIMING MODES:

STANDARD vs FIRST-WORD FALL-THROUGH (FWFT) MODE

The SN74V215, SN74V225, SN74V235, and SN74V245 support two different timing modes. The selection of the mode of operation is determined during configuration at reset ($\overline{RS}$). During an $\overline{RS}$ operation, the first load ($\overline{FL}$), read expansion input ($\overline{RXI}$), and write-expansion input ($\overline{WXI}$) pins are used to select the timing mode as shown in the truth table (see Table 5). In standard mode, the first word written to an empty FIFO does not appear on the data output lines unless a specific read operation is performed. A read operation, which consists of activating read enable ($\overline{REN}$) and enabling a rising read clock (RCLK) edge, shifts the word from internal memory to the data output lines. In FWFT mode, the first word written to an empty FIFO is clocked directly to the data output lines after three transitions of the RCLK signal. A $\overline{REN}$ does not have to be asserted to access the first word.

Various signals, both input and output signals, operate differently, depending on which timing mode is in effect.

FIRST-WORD FALL-THROUGH MODE (FWFT)

In this mode, status flags $\overline{IR}$, $\overline{PAF}$, $\overline{HF}$, $\overline{PAE}$, and $\overline{OR}$ operate in the manner outlined in Table 3. To write data into the FIFO, $\overline{WEN}$ must be low. Data presented to the data-in lines is clocked into the FIFO on subsequent transitions of WCLK. After the first write is performed, the output ready ($\overline{OR}$) flag goes low. Subsequent writes continue to fill the FIFO. $\overline{PAE}$ goes high after n + 2 words have been loaded into the FIFO, where n is the empty offset value. The default setting for this value is stated in the footnote of Table 3. This parameter also is user programmable. See the *Programmable Flag Offset Loading* section.

If data continues to be written into the FIFO, and no read operations are taking place, $\overline{HF}$ switches to low when the 258th (SN74V215), 514th (SN74V225), 1026th (SN74V235), and 2050th (SN74V245) word, respectively, is written into the FIFO. Continuing to write data into the FIFO causes $\overline{PAF}$ to go low. Again, if no reads are performed, $\overline{PAF}$ goes low after (513 – m) writes for the SN74V215, (1025 – m) writes for the SN74V225, (2049 – m) writes for the SN74V235, and (4097 – m) writes for the SN74V245, where m is the full offset value. The default setting for this value is stated in the footnote of Table 3.

When the FIFO is full, the input ready ($\overline{IR}$) flag goes high, inhibiting further write operations. If no reads are performed after a reset, $\overline{IR}$ goes high after D writes to the FIFO. D = 513 for the SN74V215, 1025 for the SN74V225, 2049 for the SN74V235, and 4097 for the SN74V245. The additional word in FWFT mode is due to the capacity of the memory plus output register.

If the FIFO is full, the first read operation causes the $\overline{IR}$ flag to go low. Subsequent read operations cause $\overline{PAF}$ and $\overline{HF}$ to go high at the conditions described in Table 3. If further read operations occur without write operations, $\overline{PAE}$ goes low when there are n + 1 words in the FIFO, where n is the empty offset value. If there is no empty offset specified, $\overline{PAE}$ is low when the device is 64 away from empty for SN74V215, and 128 away from empty for SN74V225, SN74V235, and SN74V245. Continuing read operations cause the FIFO to be empty. When the last word has been read from the FIFO, $\overline{OR}$ goes high, inhibiting further read operations. $\overline{REN}$ is ignored when the FIFO is empty.

functional description (continued)

Table 3. Status Flags for FWFT Mode

NUMBER OF WORDS IN FIFO				$\overline{IR}$	$\overline{PAF}$	$\overline{HF}$	$\overline{PAE}$	$\overline{OR}$
SN74V215	SN74V225	SN74V235	SN74V245					
0	0	0	0	L	H	H	L	H
1 to (n+1)†	1 to (n+1)†	1 to (n+1)†	1 to (n+1)†	L	H	H	L	L
(n+2) to 257	(n+2) to 513	(n+2) to 1025	(n+2) to 2049	L	H	H	H	L
258 to [513–(m+1)]‡	514 to [1025–(m+1)]‡	1026 to [2049–(m+1)]‡	2050 to [4097–(m+1)]‡	L	H	L	H	L
(513–m) to 512	(1025–m) to 1024	(2049–m) to 2048	(4097–m) to 4096	L	L	L	H	L
513	1025	2049	4097	H	L	L	H	L

† n = Empty offset (SN74V215 n = 63; SN74V225, SN74V235, and SN74V245 n = 127)
‡ m = Full offset (SN74V215 m = 63; SN74V225, SN74V235, and SN74V245 m = 127)

STANDARD MODE

In this mode, status flags $\overline{FF}$, $\overline{PAF}$, $\overline{HF}$, $\overline{PAE}$, and $\overline{EF}$ operate in the manner outlined in Table 4. To write data into the FIFO, write enable ($\overline{WEN}$) must be low. Data presented to the data-in lines is clocked into the FIFO on subsequent transitions of the write clock (WCLK). After the first write is performed, the empty flag ($\overline{EF}$) goes high. Subsequent writes continue to fill the FIFO. The programmable almost-empty flag ($\overline{PAE}$) goes high after n + 1 words have been loaded into the FIFO, where n is the empty offset value. The default setting for this value is stated in the footnote of Table 4. This parameter also is user programmable. See the *Programmable Flag Offset Loading* section.

If data continues to be written into the FIFO, and no read operations are taking place, the half-full flag ($\overline{HF}$) switches to low when the 257th (SN74V215), 513th (SN74V225), 1025th (SN74V235), and 2049th (SN74V245) word, is written into the FIFO. Continuing to write data into the FIFO causes the programmable almost-full flag ($\overline{PAF}$) to go low. Again, if no reads are performed, $\overline{PAF}$ goes low after (512 – m) writes for the SN74V215, (1024 – m) writes for the SN74V225, (2048 – m) writes for the SN74V235 and (4096 – m) writes for the SN74V245. Offset m is the full offset value. This parameter also is user programmable. See the *Programmable Flag Offset Loading* section. If there is no full offset specified, $\overline{PAF}$ is low when the device is 63 away from full for SN74V215, and 127 away from full for the SN74V225, SN74V235, and SN74V245.

When the FIFO is full, the full flag ($\overline{FF}$) goes low, inhibiting further write operations. If no reads are performed after a reset, $\overline{FF}$ goes low after D writes to the FIFO. D = 512 for the SN74V215, 1024 for the SN74V225, 2048 for the SN74V235, and 4096 for the SN74V245.

If the FIFO is full, the first read operation causes $\overline{FF}$ to go high. Subsequent read operations cause $\overline{PAF}$ and the half-full flag ($\overline{HF}$) to go high under the conditions described in Table 4. If further read operations occur, without write operations, the programmable almost-empty flag ($\overline{PAE}$) goes low when there are n words in the FIFO, where n is the empty offset value. If there is no empty offset specified, $\overline{PAE}$ is low when the device is 63 away from completely empty for SN74V215, and 127 away from completely empty for SN74V225, SN74V235, and SN74V245. Continuing read operations cause the FIFO to be empty. When the last word has been read from the FIFO, $\overline{EF}$ goes low, inhibiting further read operations. $\overline{REN}$ is ignored when the FIFO is empty.

functional description (continued)

Table 4. Status Flags for Standard Mode

NUMBER OF WORDS IN FIFO				$\overline{FF}$	$\overline{PAF}$	$\overline{HF}$	$\overline{PAE}$	$\overline{EF}$
SN74V215	SN74V225	SN74V235	SN74V245					
0	0	0	0	H	H	H	L	L
1 to n†	1 to n†	1 to n†	1 to n†	H	H	H	L	H
(n+1) to 256	(n+1) to 512	(n+1) to 1024	(n+1) to 2048	H	H	H	H	H
257 to [512–(m+1)]‡	513 to [1025–(m+1)]‡	1025 to [2048–(m+1)]‡	2049 to [4096–(m+1)]‡	H	H	L	H	H
(512–m) to 511	(1024–m) to 1023	(2048–m) to 2047	(4096–m) to 4095	H	L	L	H	H
512	1024	2048	4096	L	L	L	H	H

† n = Empty offset (SN74V215 n = 63; SN74V225, SN74V235, and SN74V245 n = 127)
‡ m = Full offset (SN74V215 m = 63; SN74V225, SN74V235, and SN74V245 m = 127)

PROGRAMMABLE FLAG LOADING

Full- and empty-flag offset values can be user programmable. The SN74V215, SN74V225, SN74V235, and SN74V245 have internal registers for these offsets. Default settings are stated in the footnotes of Table 3 and Table 4. Offset values are loaded into the FIFO using the data input lines D0–D11. To load the offset registers, the load ($\overline{LD}$) pin and $\overline{WEN}$ pin must be held low. Data present on D0–D11 is transferred to the empty offset register on the first low-to-high transition of WCLK. By continuing to hold the $\overline{LD}$ and $\overline{WEN}$ pins low, data present on D0–D11 is transferred into the full offset register on the next transition of the WCLK. The third transition again writes to the empty offset register. Writing to all offset registers does not have to occur at the same time. One or two offset registers can be written and, then, by bringing the $\overline{LD}$ pin high, the FIFO is returned to normal read/write operation. When the $\overline{LD}$ pin and $\overline{WEN}$ again are set low, the next offset register in sequence is written.

The contents of the offset registers can be read on the data output lines Q0–Q11 when the $\overline{LD}$ pin is set low, and $\overline{REN}$ is set low. Data then can be read on the next low-to-high transition of RCLK. The first transition of RCLK presents the empty offset value to the data output lines. The next transition of RCLK presents the full offset value. Offset register content can be read in the standard mode only. It cannot be read in the FWFT mode.

SYNCHRONOUS vs ASYNCHRONOUS PROGRAMMABLE FLAG TIMING SELECTION

The SN74V215, SN74V225, SN74V235, and SN74V245 can be configured during the configuration-at-reset cycle (see Table 5) with either asynchronous or synchronous timing for $\overline{PAE}$ and $\overline{PAF}$ flags.

If asynchronous $\overline{PAE}$/$\overline{PAF}$ configuration is selected (see Table 5), the $\overline{PAE}$ is asserted low on the low-to-high transition of RCLK. $\overline{PAE}$ is reset to high on the low-to-high transition of WCLK. Similarly, the $\overline{PAF}$ is asserted low on the low-to-high transition of WCLK, and $\overline{PAF}$ is reset to high on the low-to-high transition of RCLK. For detailed timing diagrams, see Figure 9 for asynchronous $\overline{PAE}$ timing and Figure 10 for asynchronous $\overline{PAF}$ timing.

If synchronous $\overline{PAE}$/$\overline{PAF}$ configuration is selected, $\overline{PAE}$ is asserted and updated on the rising edge of RCLK only, but not WCLK. Similarly, $\overline{PAF}$ is asserted and updated on the rising edge of WCLK only, but not RCLK. For detailed timing diagrams, see Figure 18 for synchronous $\overline{PAE}$ timing and Figure 19 for synchronous $\overline{PAF}$ timing.

functional description (continued)

Table 5. Truth Table for Configuration at Reset

$\overline{FL}$	$\overline{RXI}$	$\overline{WXI}$	$\overline{EF}/\overline{OR}$	$\overline{FF}/\overline{IR}$	$\overline{PAE}$, $\overline{PAF}$	FIFO TIMING MODE
0	0	0	Single register-buffered empty flag	Single register-buffered full flag	Asynchronous	Standard
0	0	1	Triple register-buffered output-ready flag	Double register-buffered input ready flag	Asynchronous	FWFT
0	1	0	Double register-buffered empty flag	Double register-buffered full flag	Asynchronous	Standard
0†	1	1	Single register-buffered empty flag	Single register-buffered full flag	Asynchronous	Standard
1	0	0	Single register-buffered empty flag	Single register-buffered full flag	Synchronous	Standard
1	0	1	Triple register-buffered output-ready flag	Double register-buffered input ready flag	Synchronous	FWFT
1	1	0	Double register-buffered empty flag	Double register-buffered full flag	Synchronous	Standard
1‡	1	1	Single register-buffered empty flag	Single register-buffered full flag	Asynchronous	Standard

† In daisy-chain depth expansion, $\overline{FL}$ is held low for the first-load device. The $\overline{RXI}$ and $\overline{WXI}$ inputs are driven by the corresponding $\overline{RXO}$ and $\overline{WXO}$ outputs of the preceding device.

‡ In daisy-chain depth expansion, $\overline{FL}$ is held high for members of the expansion other than the first-load device. The $\overline{RXI}$ and $\overline{WXI}$ inputs are driven by the corresponding $\overline{RXO}$ and $\overline{WXO}$ outputs of the preceding device.

REGISTER-BUFFERED FLAG OUTPUT SELECTION

The SN74V215, SN74V225, SN74V235, and SN74V245 can be configured during the configuration-at-reset cycle (see Table 7) with single, double, or triple register-buffered flag output signals. The various combinations available are described in Table 6 and Table 7. In general, going from single to double or triple register-buffered flag outputs removes the possibility of metastable flag indications on boundary states (empty or full conditions). The tradeoff is the addition of clock-cycle delays for the respective flag to be asserted. Not all combinations of register-buffered flag outputs are supported. Register-buffered outputs apply to the empty flag and full flag only. Partial flags are not affected. Table 6 and Table 7 summarize the options available.

Table 6. Register-Buffered Flag Output Options, FWFT Mode

OUTPUT READY ($\overline{OR}$)	INPUT READY ($\overline{IR}$)	PARTIAL FLAGS	PROGRAMMING AT RESET			FLAG TIMING DIAGRAMS
			$\overline{FL}$	$\overline{RXI}$	$\overline{WXI}$	
Triple	Double	Asynchronous	0	0	1	Figure 23
Triple	Double	Synchronous	1	0	1	Figure 16, Figure 17

Table 7. Register-Buffered Flag Output Options, Standard Mode

EMPTY FLAG ($\overline{EF}$) BUFFERED OUTPUT	FULL FLAG ($\overline{FF}$) BUFFERED OUTPUT	PARTIAL FLAGS TIMING MODE	PROGRAMMING AT RESET			FLAG TIMING DIAGRAMS
			$\overline{FL}$	$\overline{RXI}$	$\overline{WXI}$	
Single	Single	Asynchronous	0	0	0	Figure 5, Figure 6
Single	Single	Synchronous	1	0	0	Figure 5, Figure 6
Double	Double	Asynchronous	0	1	0	Figure 20, Figure 22
Double	Double	Synchronous	1	1	0	Figure 20, Figure 22

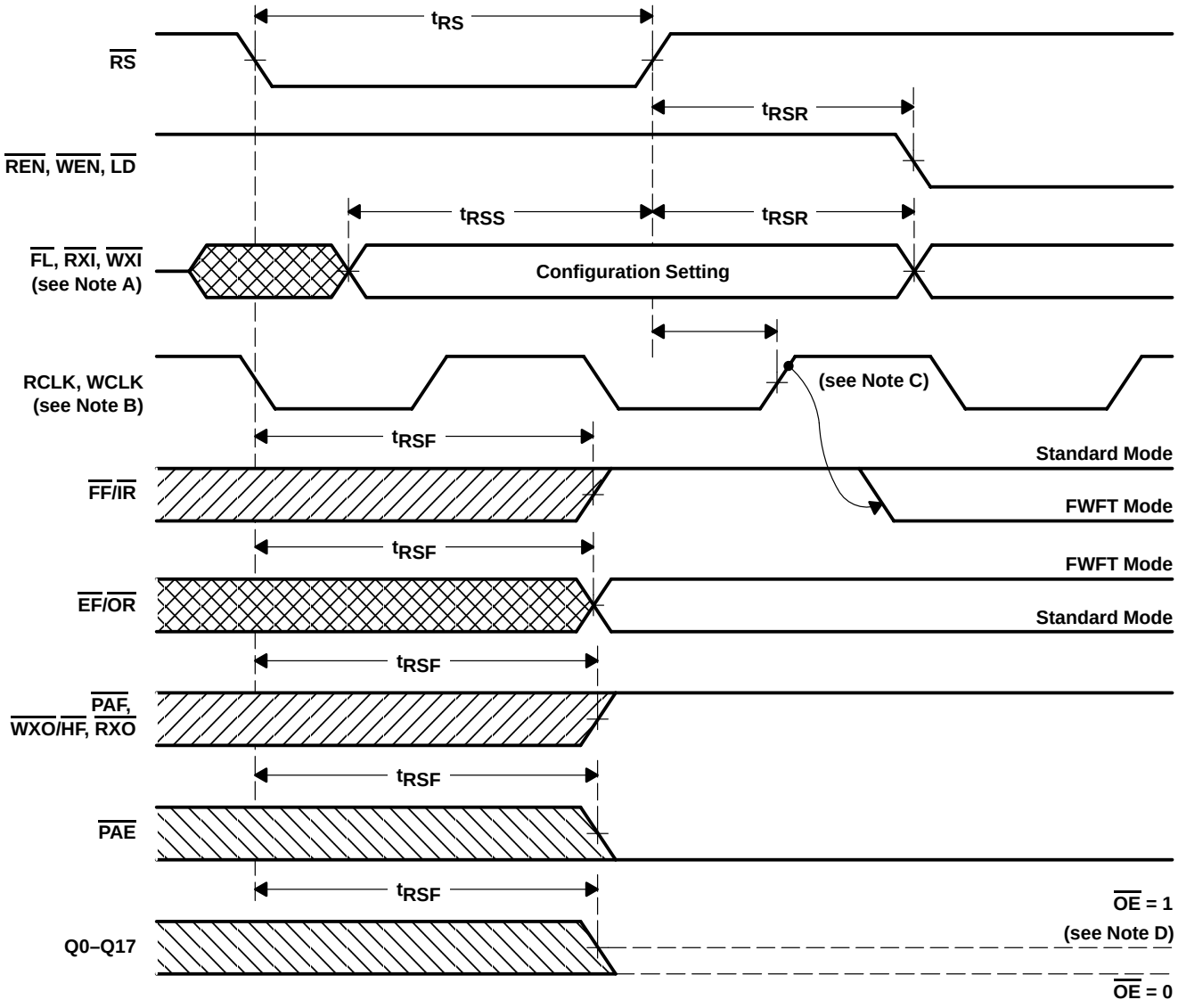

NOTES: A. Single-device mode ($\overline{FL}$, $\overline{RXI}$, $\overline{WXI}$) = (0,0,0), (0,0,1), (0,1,0), (1,0,0), (1,0,1) or (1,1,0). $\overline{FL}$, $\overline{RXI}$, $\overline{WXI}$ should be static (tied to V_{CC} or GND).
B. The clocks (RCLK, WCLK) can be free-running asynchronously or coincidentally.
C. In FWFT mode, $\overline{IR}$ goes low based on the WCLK edge after reset.
D. After reset, the outputs are low if $\overline{OE}$ = 0 and 3-state if $\overline{OE}$ = 1.

Figure 1. Reset Timing

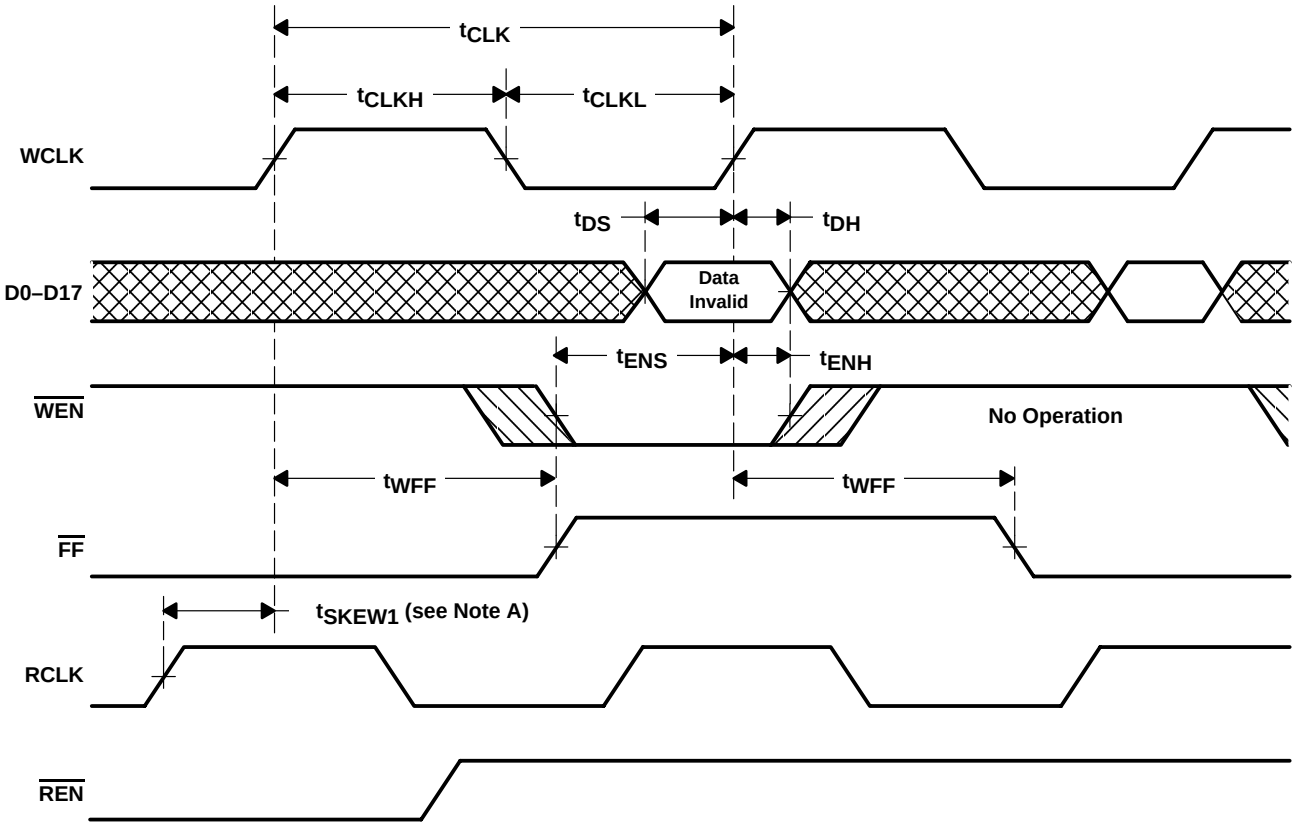

NOTES: A. t_{SKEW1} is the minimum time between a rising RCLK edge and a rising WCLK edge to ensure that $\overline{FF}$ goes high during the current clock cycle. If the time between the rising edge of RCLK and the rising edge of WCLK is less than t_{SKEW1}, $\overline{FF}$ might not change state until the next WCLK edge.

B. Select standard mode by setting ($\overline{FL}$, $\overline{RXI}$, $\overline{WXI}$) = (0,0,0), (0,1,1), (1,0,0) or (1,1,1) during reset.

Figure 2. Write-Cycle Timing With Single Register-Buffered $\overline{FF}$ (Standard Mode)

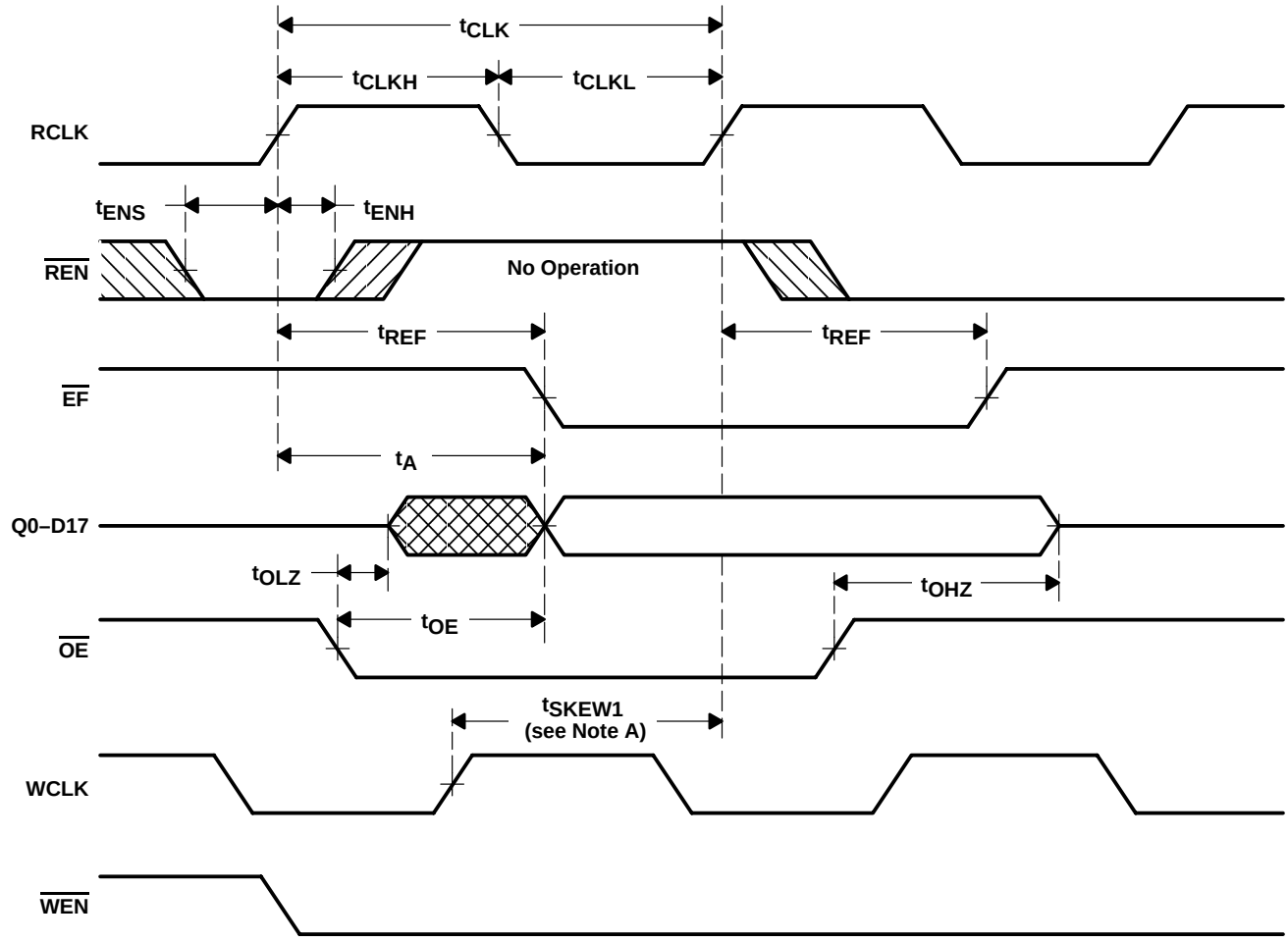

NOTES: A. t_{SKEW1} is the minimum time between a rising WCLK edge and a rising RCLK edge to ensure that $\overline{EF}$ goes high during the current clock cycle. If the time between the rising edge of WCLK and the rising edge of RCLK is less than t_{SKEW1}, $\overline{EF}$ might not change state until the next RCLK edge.

B. Select standard mode by setting ($\overline{FL}$, $\overline{RXI}$, $\overline{WXI}$) = (0,0,0), (0,1,1), (1,0,0) or (1,1,1) during reset.

Figure 3. Read-Cycle Timing With Single Register-Buffered $\overline{EF}$ (Standard Mode)

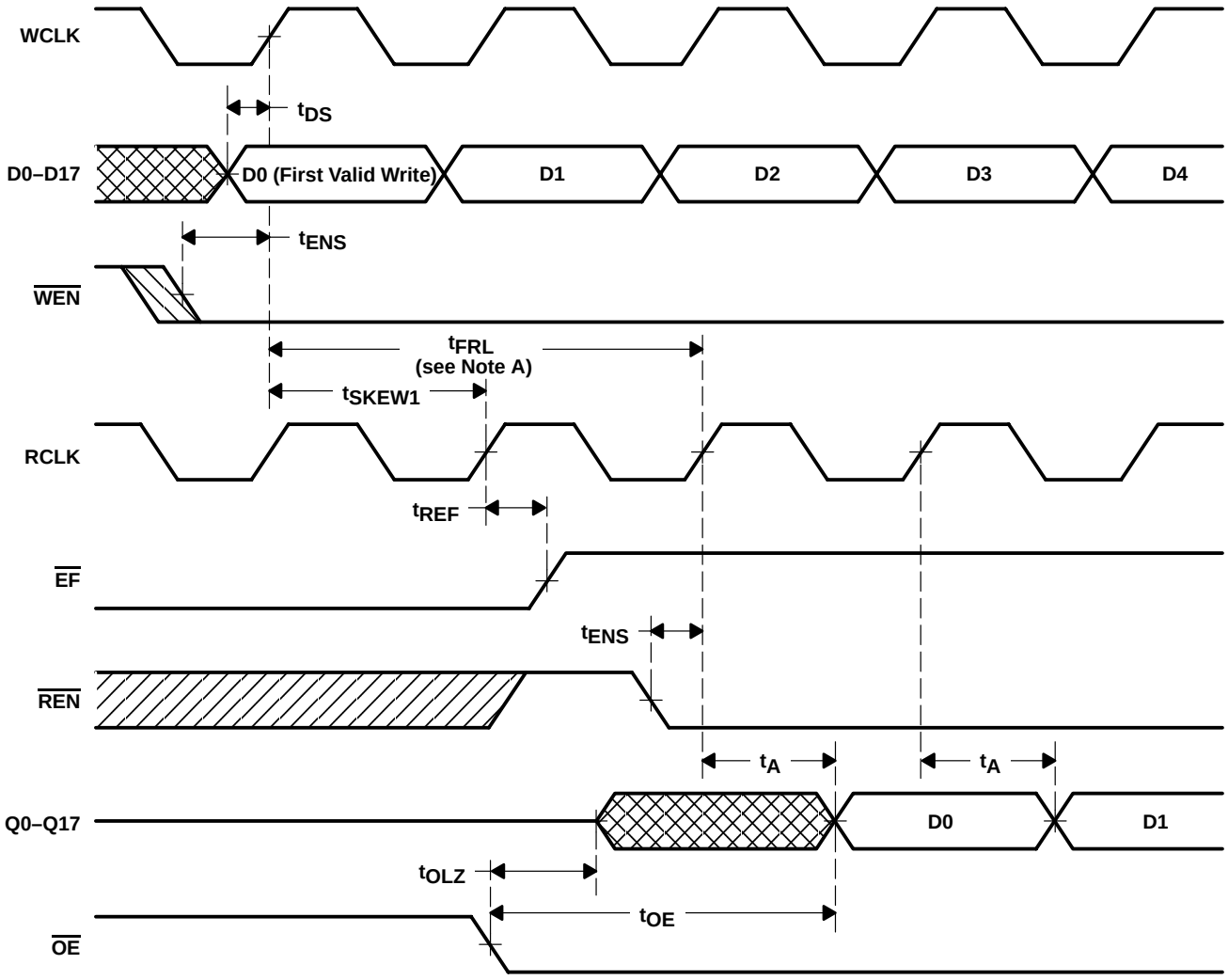

NOTES: A. When t_{SKEW1} is at the minimum specification, t_{FRL} (maximum) = t_{CLK} + t_{SKEW1}. When t_{SKEW1} is less than the minimum specification, t_{FRL} (maximum) = either $(2 \times t_{CLK}) + t_{SKEW1}$ or $t_{CLK} + t_{SKEW1}$. The latency timing applies only at the empty boundary ($\overline{EF}$ is low).
B. The first word always is available the cycle after $\overline{EF}$ goes high.
C. Select standard mode by setting ($\overline{FL}$, $\overline{RXI}$, $\overline{WXI}$) = (0,0,0), (0,1,1), (1,0,0) or (1,1,1) during reset.

Figure 4. First-Data-Word Latency with Single Register-Buffered $\overline{EF}$ (Standard Mode)

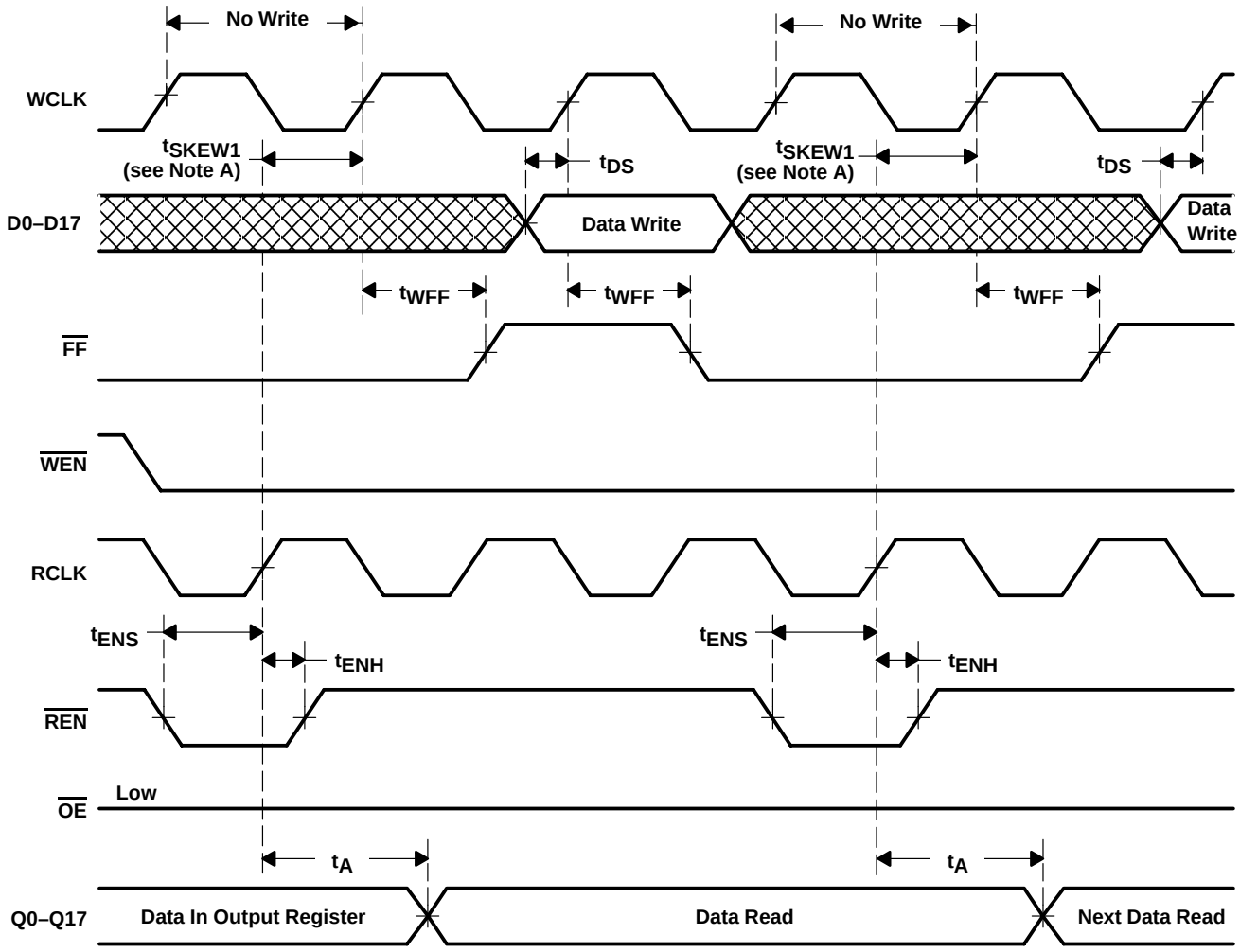

NOTES: A. t_{SKEW1} is the minimum time between a rising RCLK edge and a rising WCLK edge to ensure that $\overline{FF}$ goes high during the current clock cycle. If the time between the rising edge of RCLK and the rising edge of WCLK is less than t_{SKEW1}, $\overline{FF}$ might not change state until the next WCLK edge.

B. Select standard mode by setting ($\overline{FL}$, $\overline{RXI}$, $\overline{WXI}$) = (0,0,0), (0,1,1), (1,0,0) or (1,1,1) during reset.

Figure 5. Single Register-Buffered Full-Flag Timing (Standard Mode)

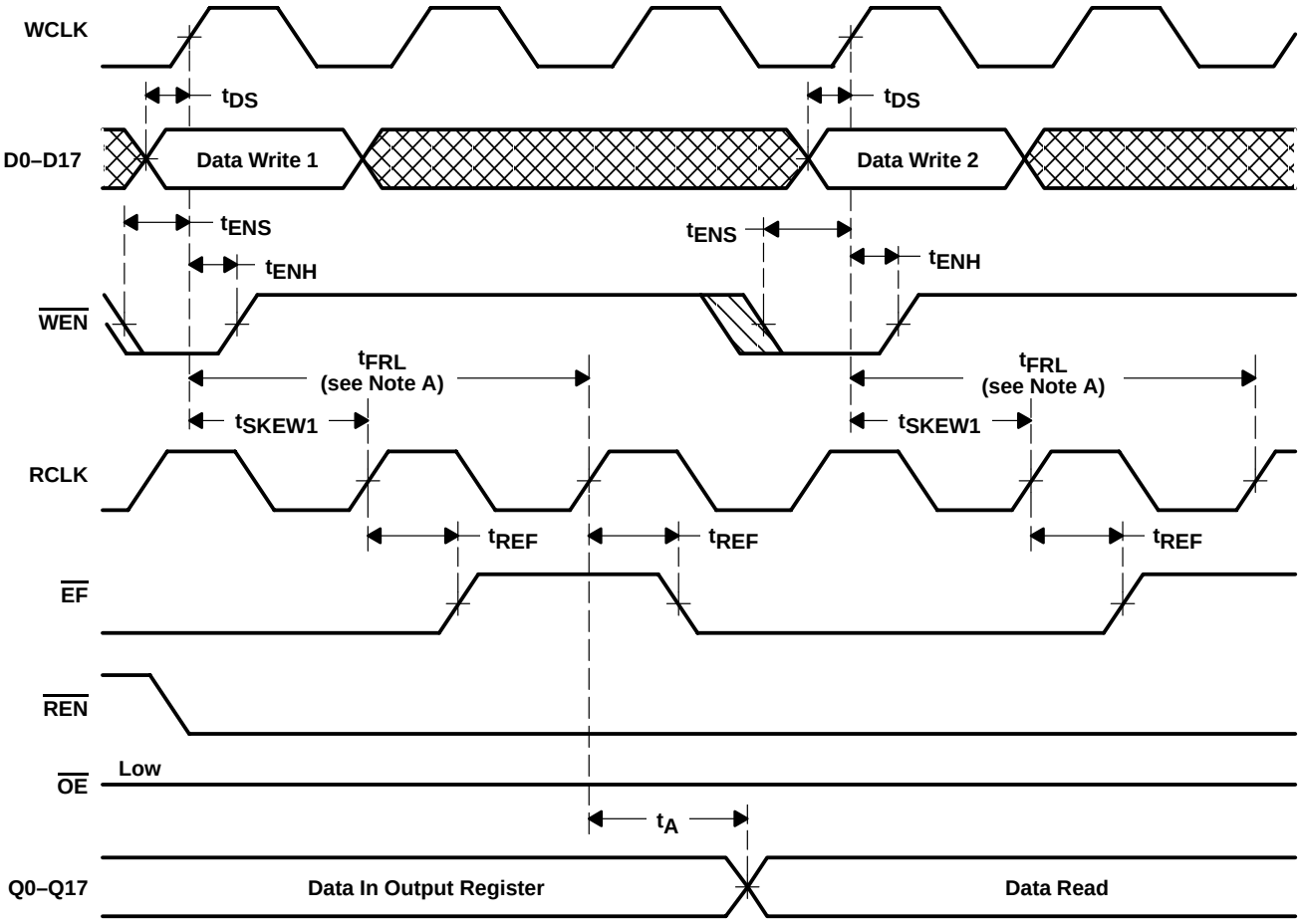

NOTES: A. When t_{SKEW1} is at the minimum specification, t_{FRL} (maximum) = t_{CLK} + t_{SKEW1}. When t_{SKEW1} is less than the minimum specification, t_{FRL} (maximum) = either (2 × t_{CLK}) + t_{SKEW1} or t_{CLK} + t_{SKEW1}. The latency timing applies only at the empty boundary ($\overline{EF}$ is low).

B. Select standard mode by setting ($\overline{FL}$, $\overline{RXI}$, $\overline{WXI}$) = (0,0,0), (0,1,1), (1,0,0) or (1,1,1) during reset.

Figure 6. Single Register-Buffered Empty Flag Timing (Standard Mode)

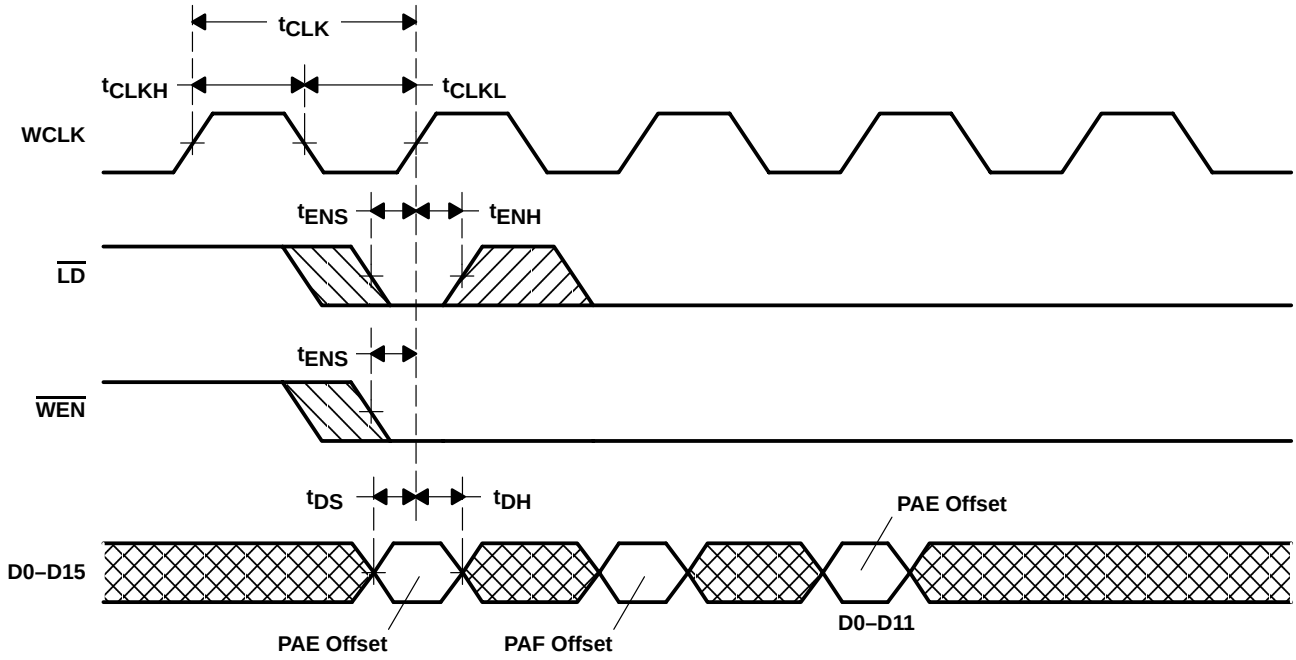

Figure 7. Write Programmable Registers (Standard and FWFT Modes)

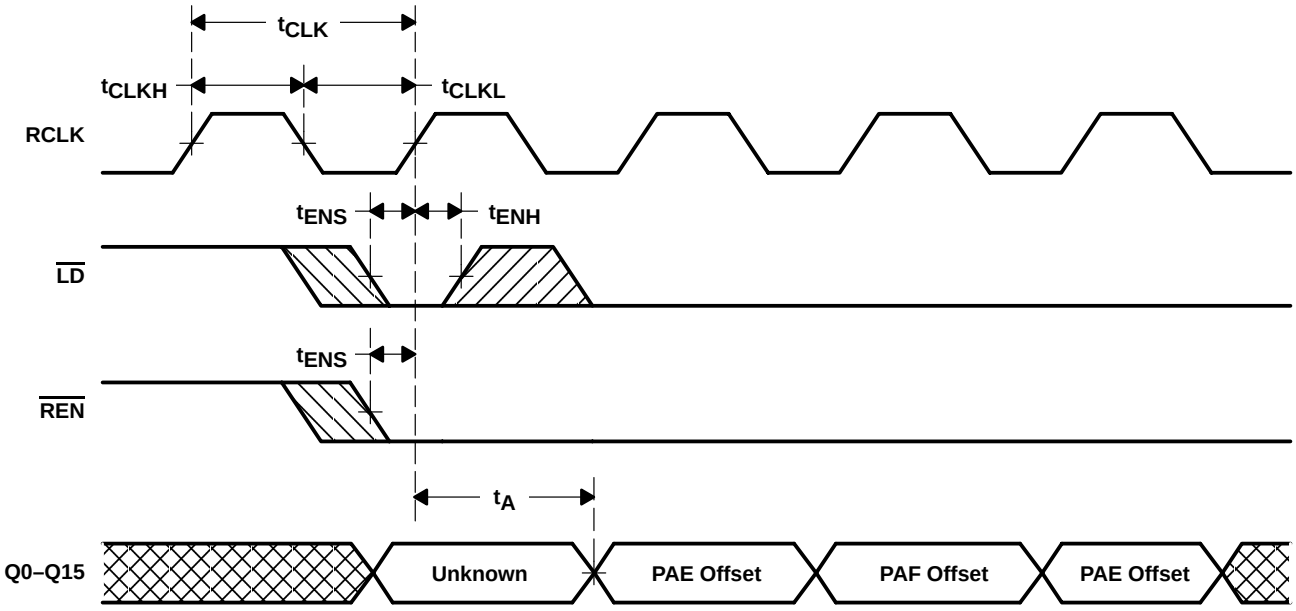

Figure 8. Read Programmable Registers (Standard Mode)

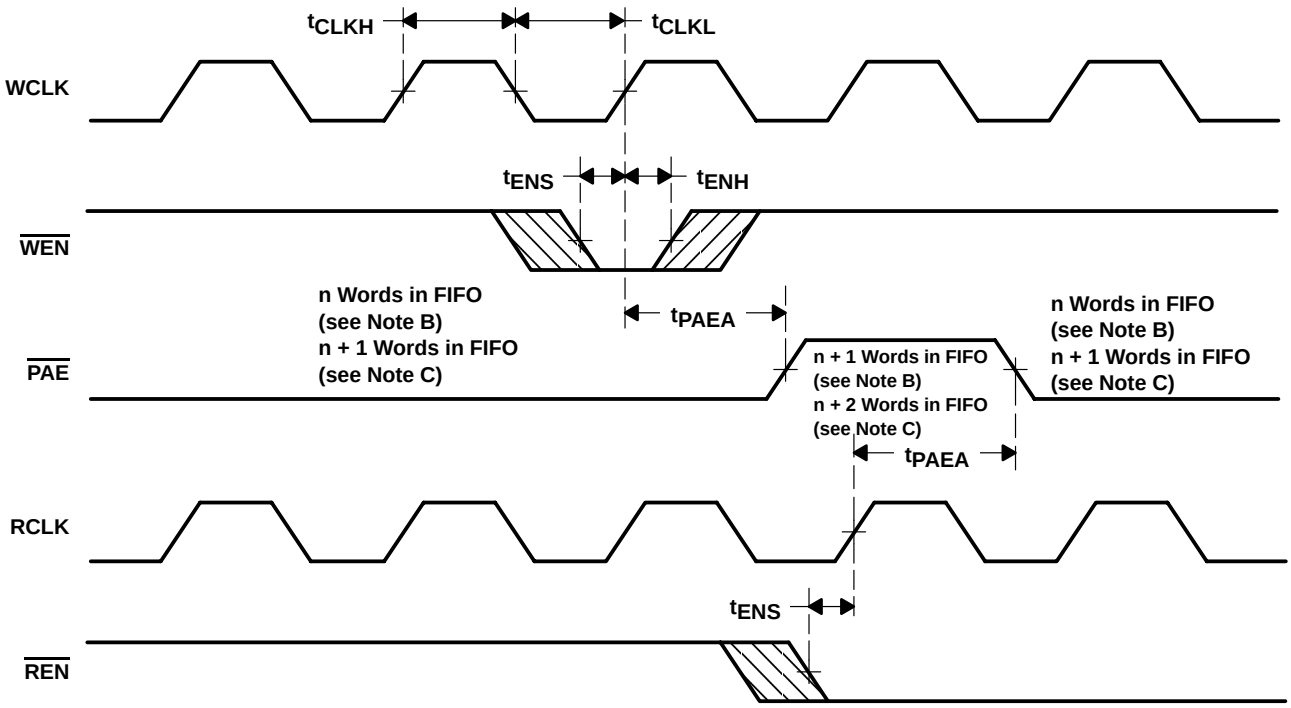

NOTES: A. n = $\overline{\text{PAE}}$ offset
B. For standard mode
C. For FWFT mode
D. $\overline{\text{PAE}}$ is asserted low on RCLK transition and reset to high on WCLK transition.
E. Select the asynchronous modes by setting ($\overline{\text{FL}}$, $\overline{\text{RXI}}$, $\overline{\text{WXI}}$) = (0,0,0), (0,0,1), (0,1,0), (0,1,1) or (1,1,1) during reset.

Figure 9. Asynchronous Programmable Almost-Empty-Flag Timing (Standard and FWFT Modes)

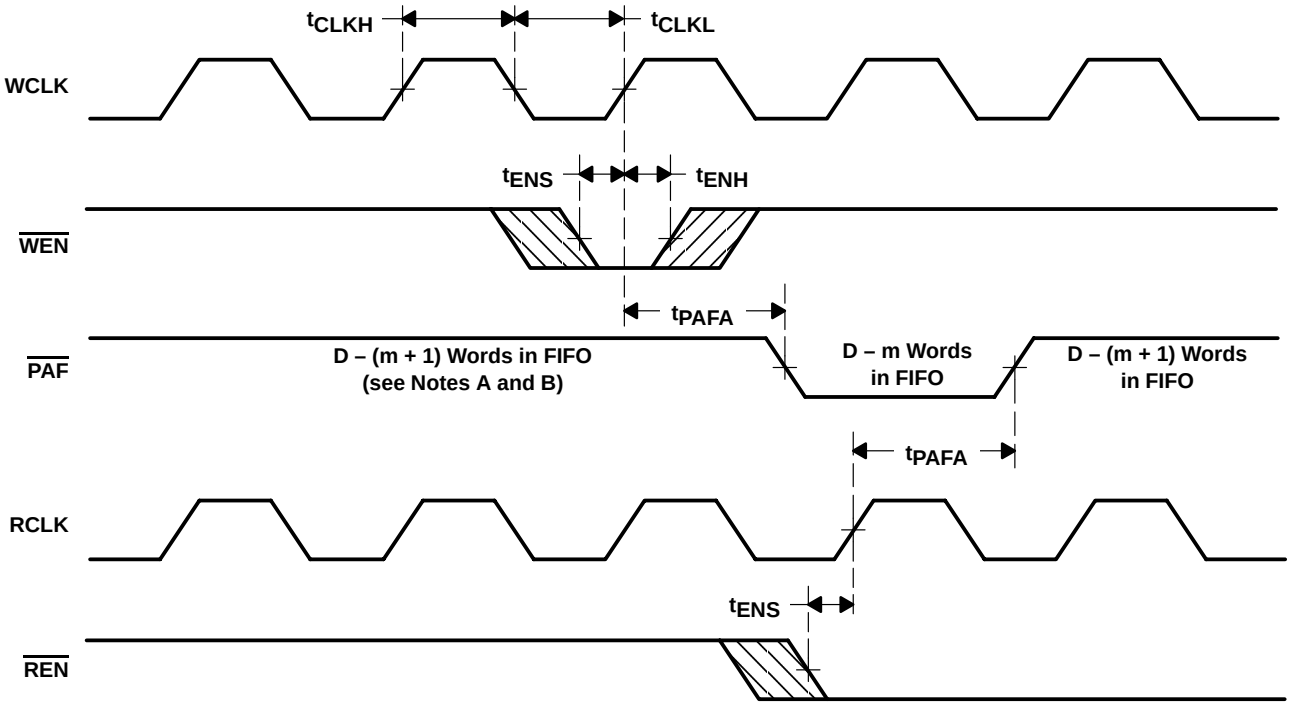

NOTES: A. m = $\overline{\text{PAF}}$ offset
B. D = maximum FIFO depth
In FWFT mode: D = 513 for the SN74V215, 1025 for the SN74V225, 2049 for the SN74V235 and 4097 for the SN74V245
In standard mode: D = 512 for the SN74V215, 1024 for the SN74V225, 2048 for the SN74V235 and 4096 for the SN74V245
C. $\overline{\text{PAF}}$ is asserted to low on WCLK transition and reset to high on RCLK transition.
D. Select asynchronous modes by setting ($\overline{\text{FL}}$, $\overline{\text{RXI}}$, $\overline{\text{WXI}}$) = (0,0,0), (0,0,1), (0,1,0), (0,1,1) or (1,1,1) during reset.

Figure 10. Asynchronous Programmable Almost-Full-Flag Timing (Standard and FWFT Modes)

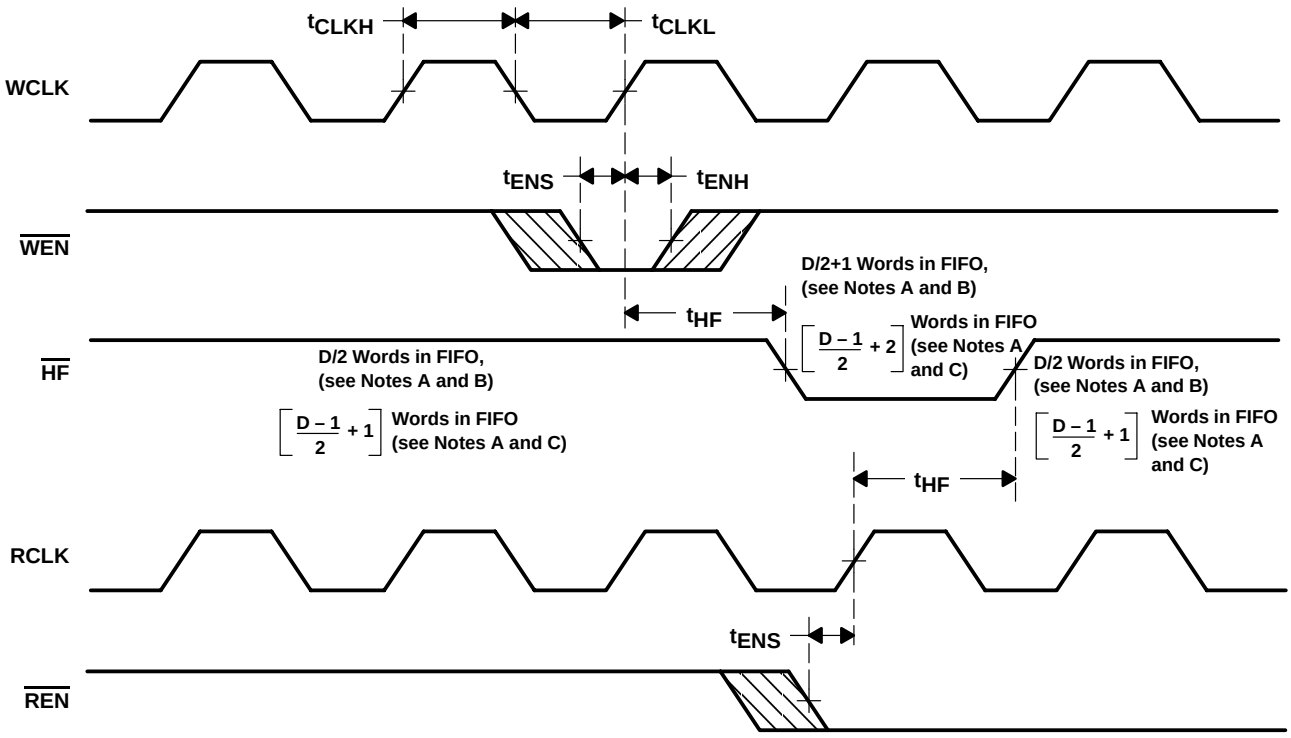

NOTES: A. D = maximum FIFO depth
In FWFT mode: D = 513 for the SN74V215, 1025 for the SN74V225, 2049 for the SN74V235 and 4097 for the SN74V245
In standard mode: D = 512 for the SN74V215, 1024 for the SN74V225, 2048 for the SN74V235 and 4096 for the SN74V245
B. For standard mode
C. For FWFT mode
D. Select single-device mode by setting ($\overline{FL}$, $\overline{RXI}$, $\overline{WXI}$) = (0,0,0), (0,0,1), (0,1,0), (1,0,0), (1,0,1) or (1,1,0) during reset.

Figure 11. Half-Full-Flag Timing (Standard and FWFT Modes)

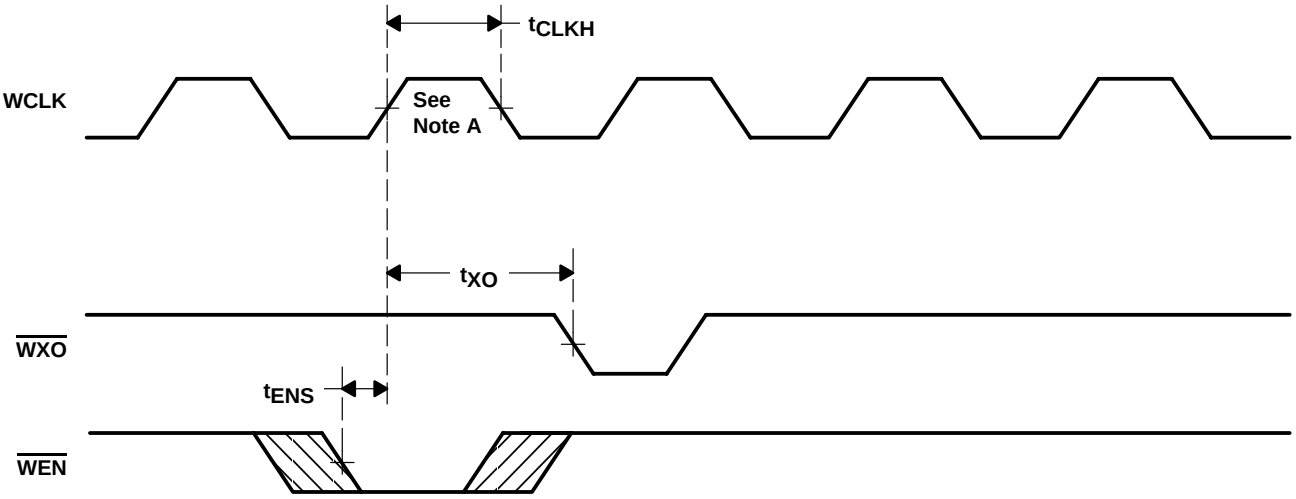

NOTE A: Write to last physical location.

Figure 12. Write-Expansion-Out Timing

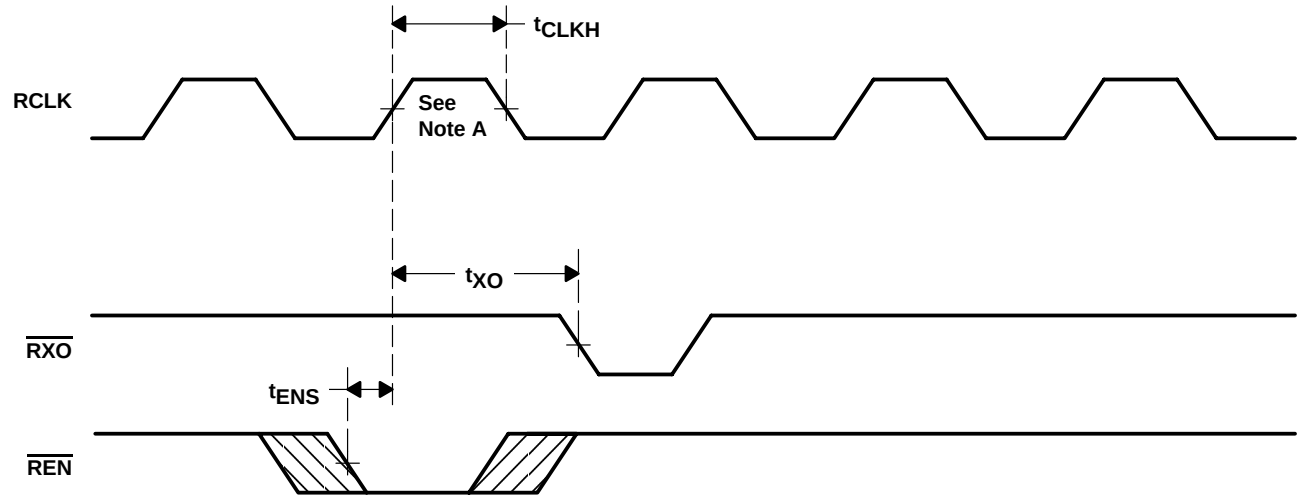

NOTE A: Read from last physical location.

Figure 13. Read-Expansion-Out Timing

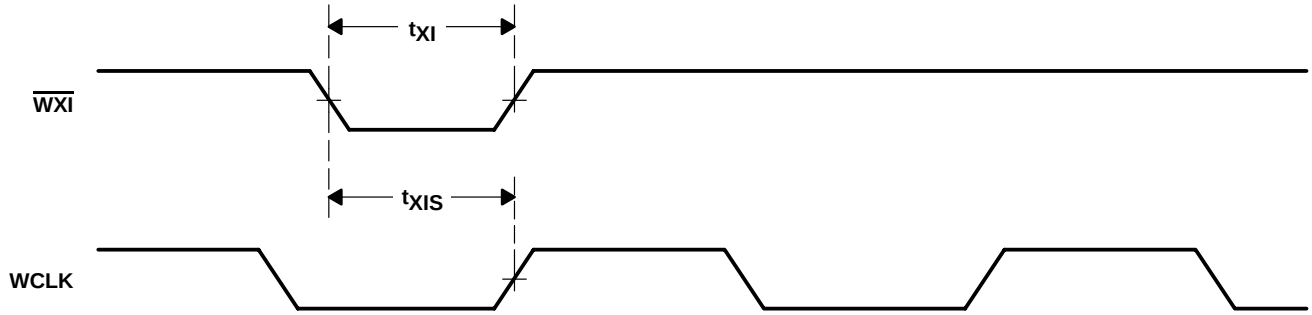

Figure 14. Write-Expansion-In Timing

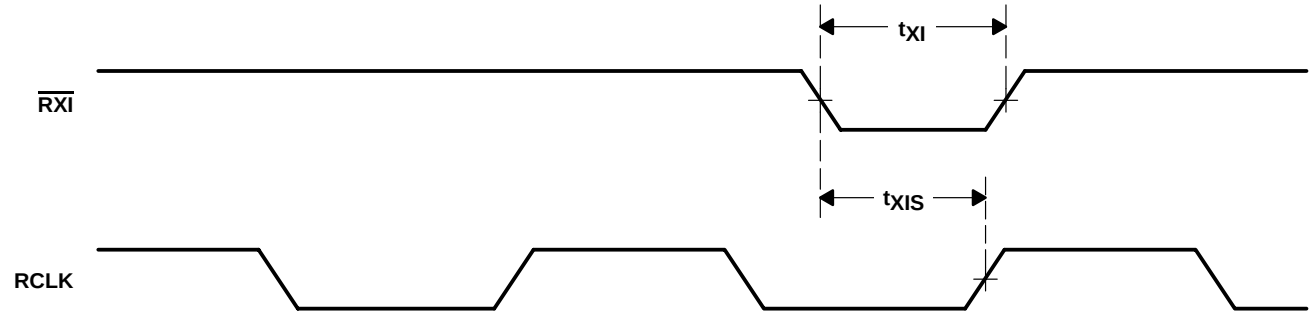

Figure 15. Read-Expansion-In Timing

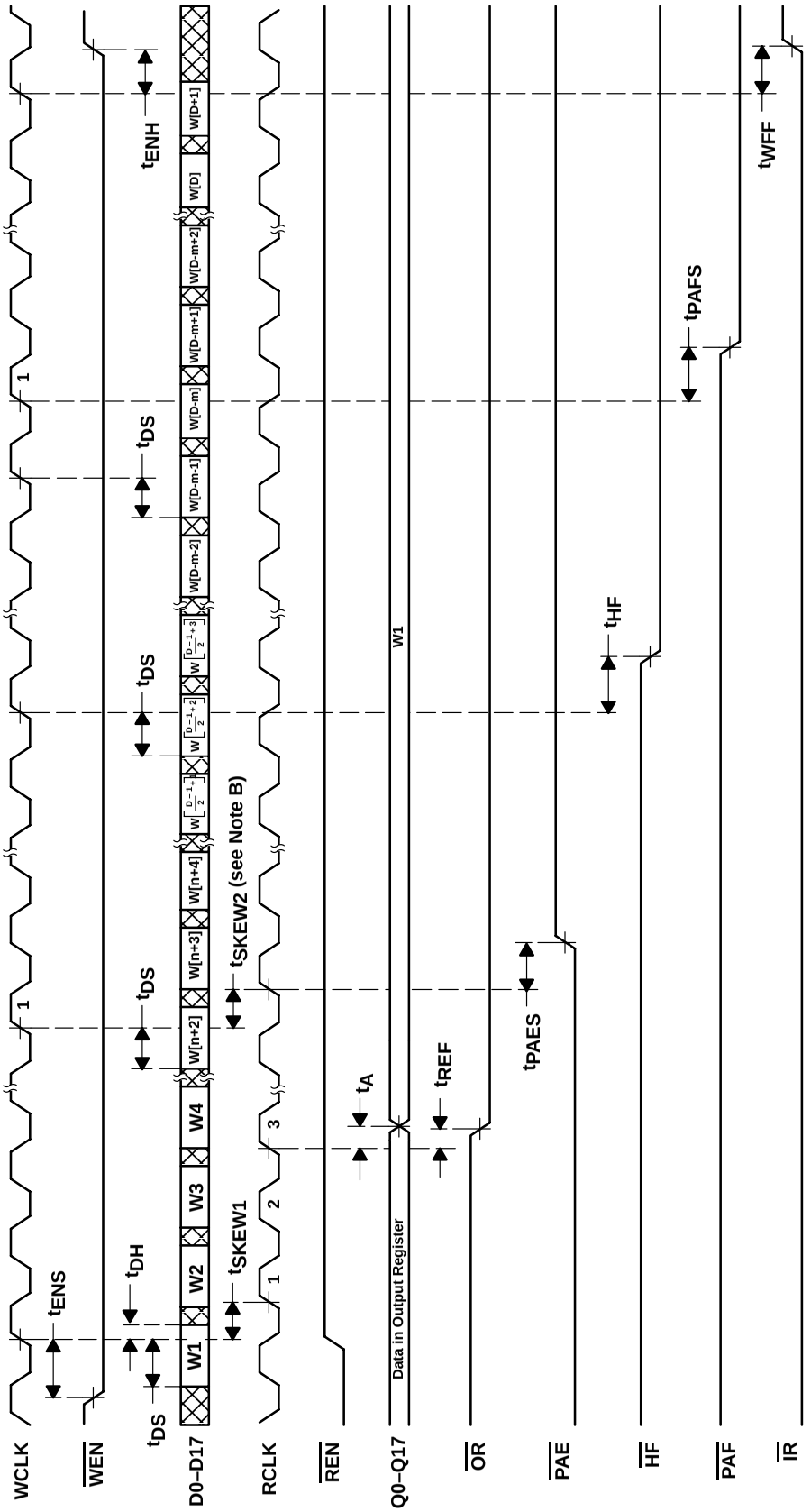

NOTES:
A. t_{SKEW1} is the minimum time between a rising WCLK edge and a rising RCLK edge for $\overline{OR}$ to go low after two RCLK cycles plus t_{REF}. If the time between the rising edge of WLCK and the rising edge of RCLK is less than t_{SKEW1}, the $\overline{OR}$ deassertion might be delayed one extra RCLK cycle.
B. t_{SKEW2} is the minimum time between a rising WCLK edge and a rising RCLK edge for $\overline{PAE}$ to go high during the current clock cycle. If the time between the rising edge of WCLK and the rising edge of RCLK is less than t_{SKEW2}, the $\overline{PAE}$ deassertion might be delayed one extra RCLK cycle.
C. $\overline{LD}$ is high, $\overline{OE}$ is low.
D. n = $\overline{PAE}$ offset, m = $\overline{PAF}$ offset, D = maximum FIFO depth = 513 words for the SN74V215, 1025 words for the SN74V225, 2049 words for the SN74V235, and 4097 words for the SN74V245.
E. Select synchronous FWFT mode by setting ($\overline{FL}$, $\overline{RXI}$, $\overline{WXI}$) = (1,0,1) during reset.

Figure 16. Write Timing With Synchronous Programmable Flags (FWFT Mode)

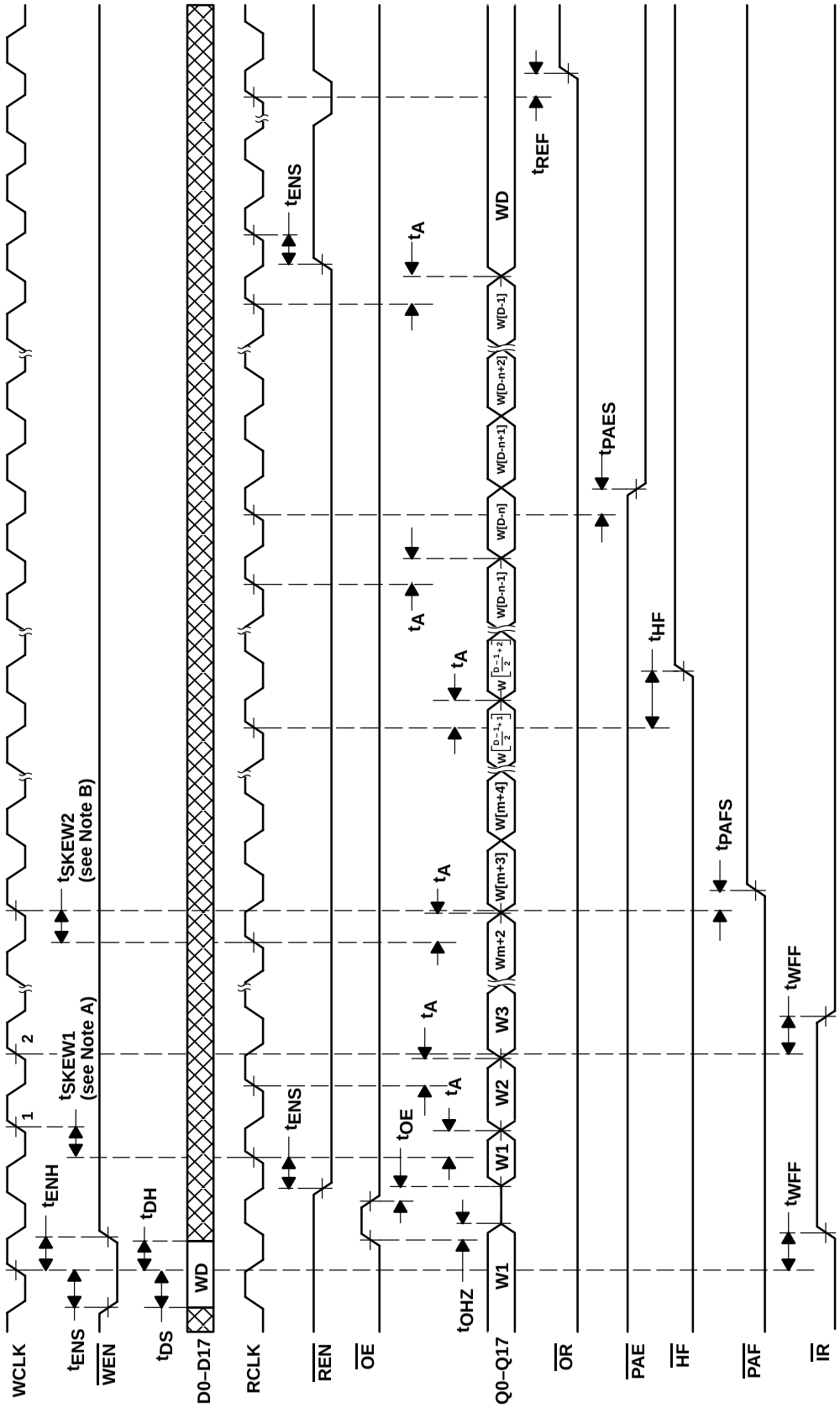

NOTES:
A. t_{SKEW1} is the minimum time between a rising RCLK edge and a rising WCLK edge to ensure that $\overline{IR}$ goes low after one WCLK plus t_{WFF}. If the time between the rising edge of RLCK and the rising edge of WCLK is less than t_{SKEW1}, the $\overline{IR}$ assertion might be delayed an extra WCLK cycle.
B. t_{SKEW2} is the minimum time between a rising RCLK edge and a rising WCLK edge for $\overline{PAF}$ to go high during the current clock cycle. If the time between the rising edge of RCLK and the rising edge of WCLK is less than t_{SKEW2}, the $\overline{PAF}$ deassertion time may be delayed an extra WCLK cycle.
C. $\overline{LD}$ is high.
D. n = $\overline{PAE}$ offset, m = $\overline{PAF}$ offset, D = maximum FIFO depth = 513 words for the SN74V215, 1025 words for the SN74V225, 2049 words for SN74V235, and 4097 words for SN74V245.
E. Select synchronous FWFT mode by setting ($\overline{FL}$, $\overline{RXI}$, $\overline{WXI}$) = (1,0,1) during reset.

Figure 17. Read Timing With Synchronous Programmable Flags (FWFT Mode)

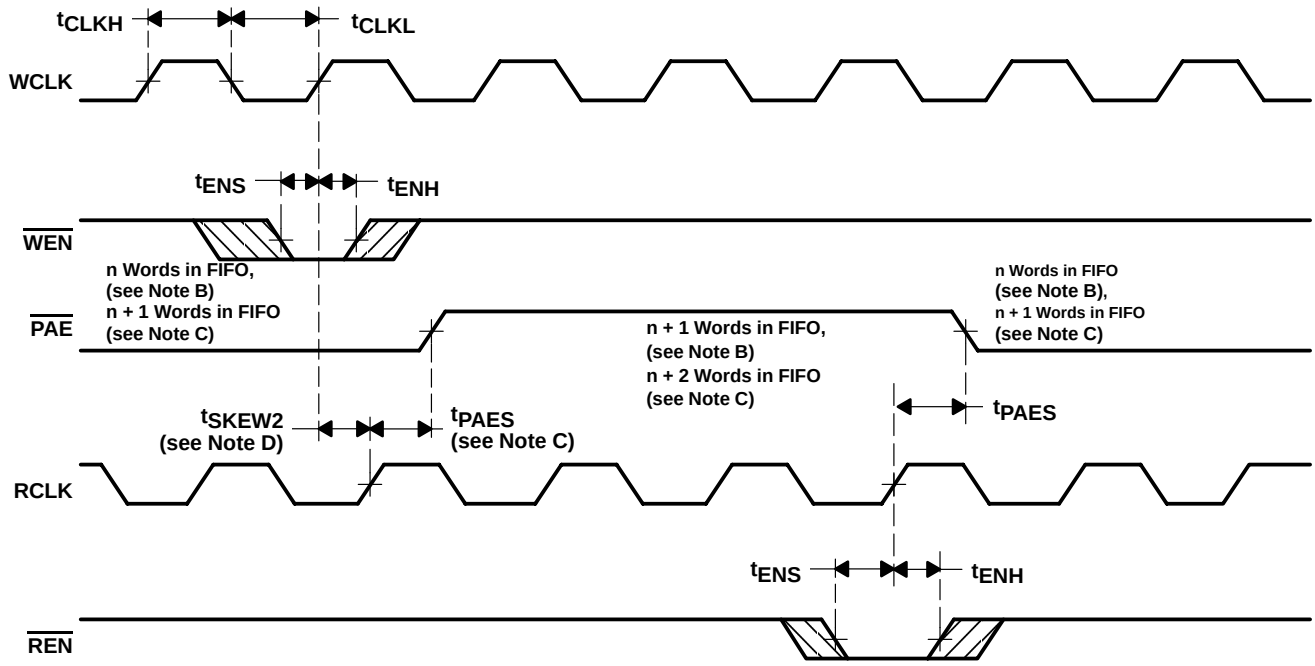

NOTES: A. n = $\overline{\text{PAE}}$ offset
B. For standard mode
C. For FWFT mode
D. t_{SKEW2} is the minimum time between a rising WCLK edge and a rising RCLK edge for $\overline{\text{PAE}}$ to go high during the current clock cycle. If the time between the rising edge of WCLK and the rising edge of RCLK is less than t_{SKEW2}, the $\overline{\text{PAE}}$ deassertion might be delayed one extra RCLK cycle.
E. $\overline{\text{PAE}}$ is asserted and updated on the rising edge of RCLK only.
F. Select synchronous modes by setting ($\overline{\text{FL}}$, $\overline{\text{RXI}}$, $\overline{\text{WXI}}$) = (1,0,0), (1,0,1), or (1,1,0) during reset.

Figure 18. Synchronous Programmable Almost-Empty-Flag Timing (Standard and FWFT Modes)

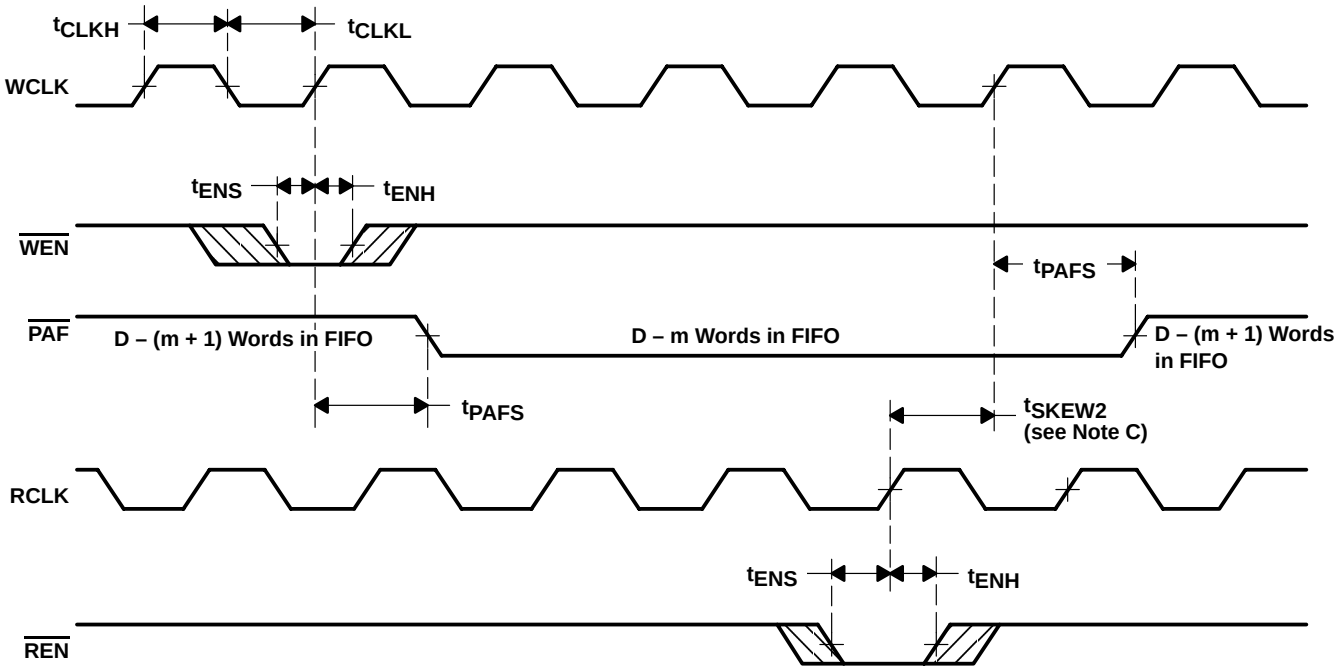

NOTES: A. m = $\overline{\text{PAF}}$ offset
B. D = maximum FIFO depth
In FWFT mode: D = 513 for the SN74V215, 1025 for the SN74V225, 2049 for the SN74V235, and 4097 for the SN74V245.
In standard mode: D = 512 for the SN74V215, 1024 for the SN74V225, 2048 for the SN74V235, and 4096 for the SN74V245.
C. t_{SKEW2} is the minimum time between a rising RCLK edge and a rising WCLK edge for $\overline{\text{PAF}}$ to go high during the current clock cycle. If the time between the rising edge of RCLK and the rising edge of WCLK is less than t_{SKEW2}, the $\overline{\text{PAF}}$ deassertion time might be delayed an extra WCLK cycle.
D. $\overline{\text{PAF}}$ is asserted and updated on the rising edge of WCLK only.
E. Select synchronous modes by setting ($\overline{\text{FL}}$, $\overline{\text{RXI}}$, $\overline{\text{WXI}}$) = (1,0,0), (1,0,1), or (1,1,0) during reset.

Figure 19. Synchronous Programmable Almost-Full-Flag Timing (Standard and FWFT Modes)

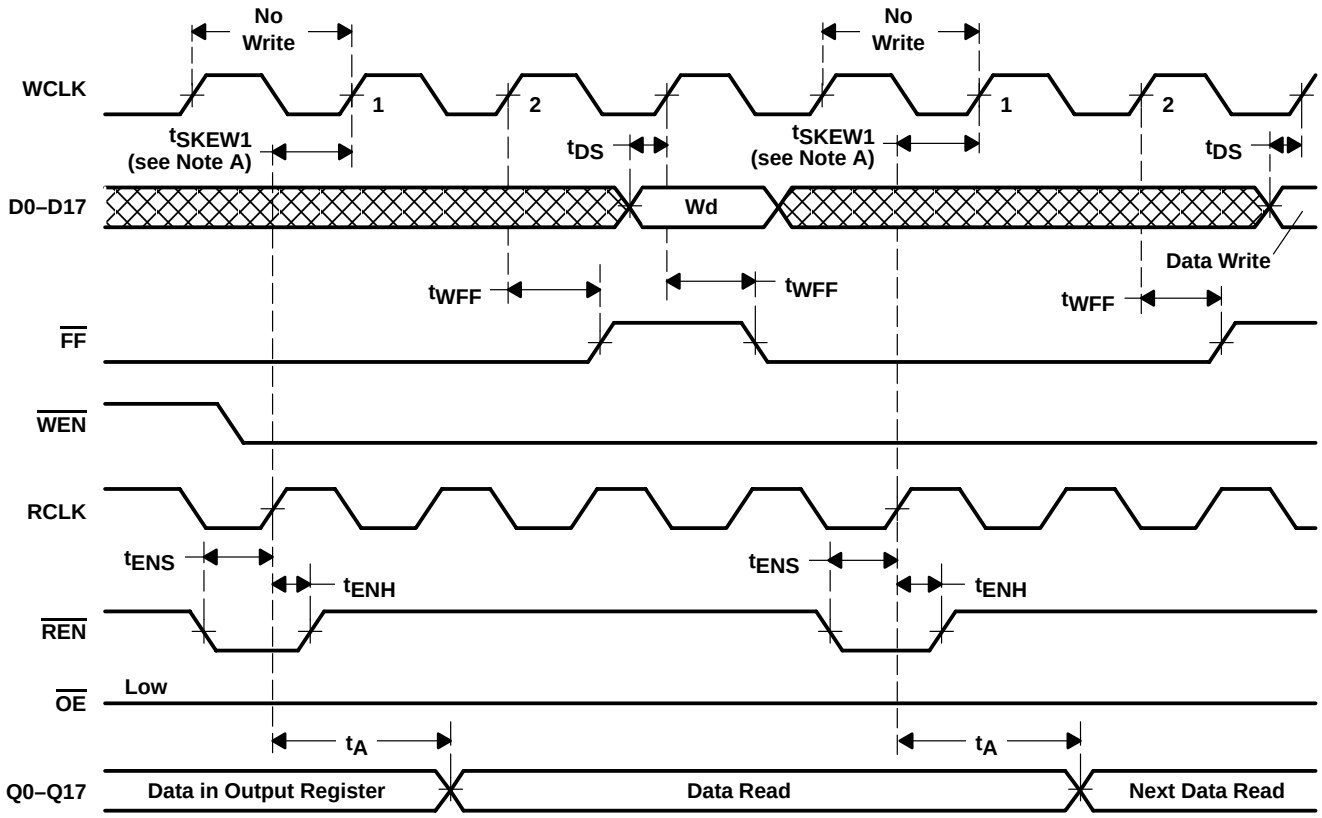

NOTES: A. t_{SKEW1} is the minimum time between a rising RCLK edge and a rising WCLK edge to ensure that $\overline{FF}$ goes high after one WCLK cycle plus t_{WFF}. If the time between the rising edge of RCLK and the rising edge of WCLK is less than t_{SKEW1}, the $\overline{FF}$ deassertion time might be delayed an extra WCLK cycle.
B. $\overline{LD}$ is high.
C. Select double register-buffered standard mode by setting ($\overline{FL}$, $\overline{RXI}$, $\overline{WXI}$) = (0,1,0) or (1,1,0) during reset.

Figure 20. Double Register-Buffered Full-Flag Timing (Standard Mode)

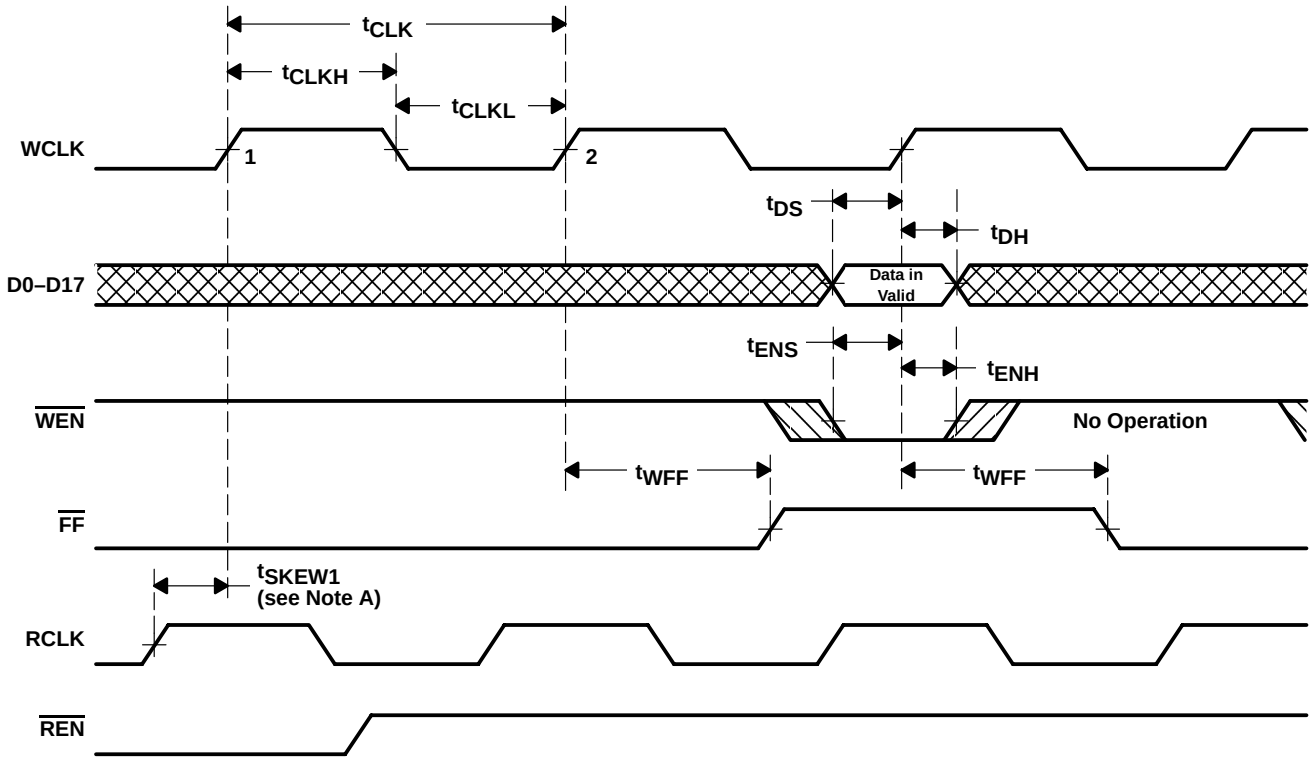

NOTES: A. t_{SKEW1} is the minimum time between a rising RCLK edge and a rising WCLK edge to ensure that $\overline{FF}$ goes high after one WCLK cycle plus t_{RFF}. If the time between the rising edge of RCLK and the rising edge of WCLK is less than t_{SKEW1}, the $\overline{FF}$ deassertion might be delayed an extra WCLK cycle.
B. $\overline{LD}$ is high.
C. Select double register-buffered standard mode by setting ($\overline{FL}$, $\overline{RXI}$, $\overline{WXI}$) = (0,1,0) or (1,1,0) during reset.

Figure 21. Write-Cycle Timing With Double Register-Buffered $\overline{FF}$ (Standard Mode)

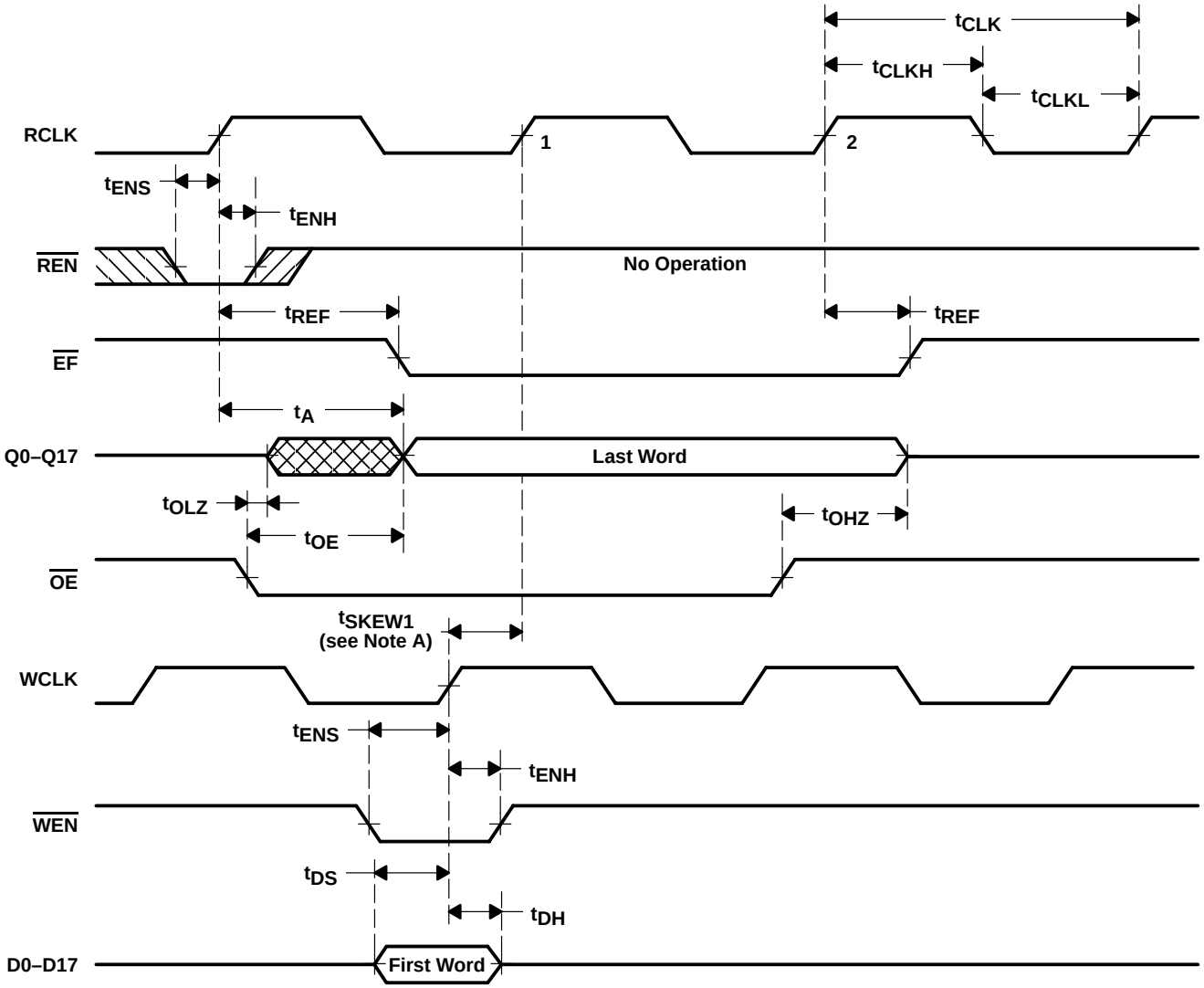

NOTES: A. t_{SKEW1} is the minimum time between a rising WCLK edge and a rising RCLK edge to ensure that $\overline{EF}$ goes high after one RCLK cycle plus t_{REF}. If the time between the rising edge of WCLK and the rising edge of RCLK is less than t_{SKEW1}, the $\overline{EF}$ deassertion might be delayed an extra RCLK cycle.
B. $\overline{LD}$ is high.
C. Select double register-buffered standard mode by setting ($\overline{FL}$, $\overline{RXI}$, $\overline{WXI}$) = (0,1,0) or (1,1,0) during reset.

Figure 22. Read-Cycle Timing With Double Register-Buffered $\overline{EF}$ (Standard Timing)

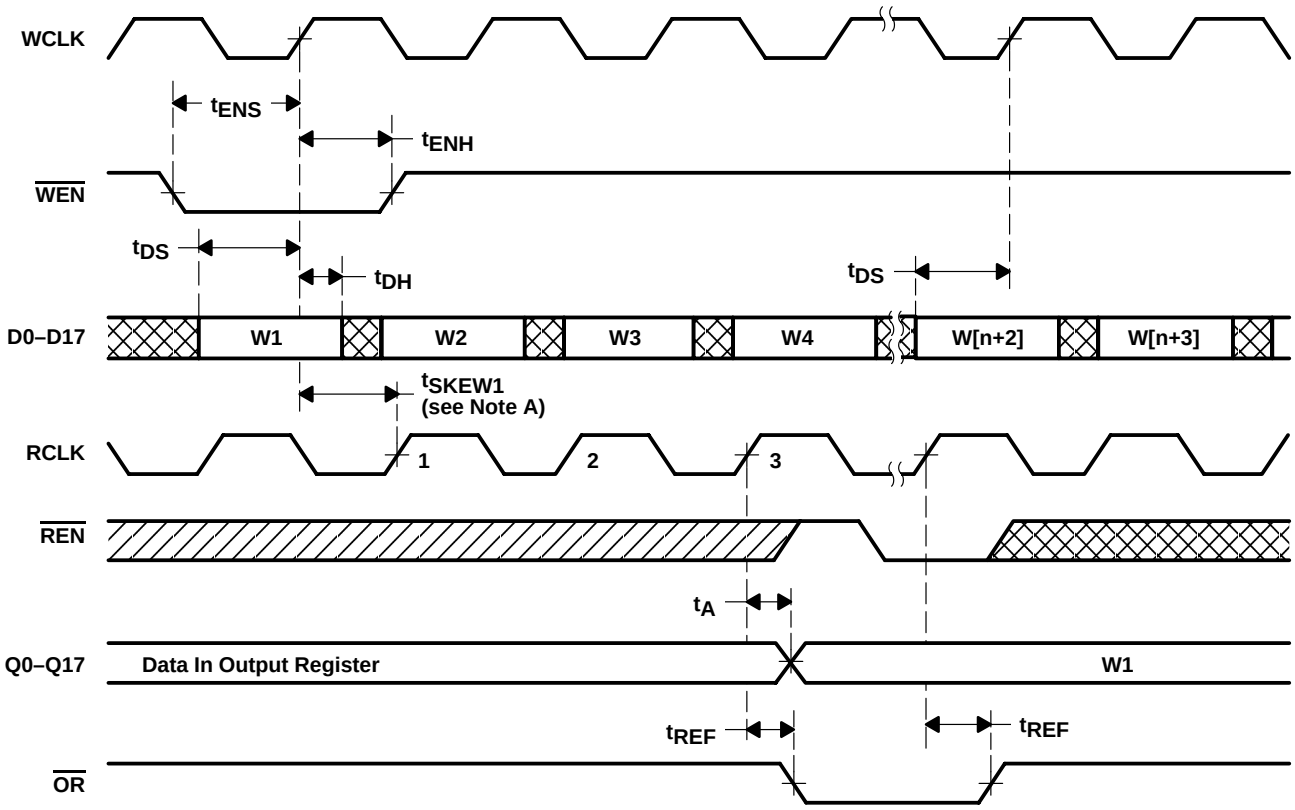

NOTES: A. t_{SKEW1} is the minimum time between a rising WCLK edge and a rising RCLK edge for $\overline{OR}$ to go high during the current cycle. If the time between the rising edge of WLCK and the rising edge of RCLK is less than t_{SKEW1}, the $\overline{OR}$ deassertion might be delayed one extra RCLK cycle.
B. $\overline{LD}$ is high, $\overline{OE}$ is low.
C. Select FWFT mode by setting ($\overline{FL}$, $\overline{RXI}$, $\overline{WXI}$) = (0,0,1) or (1,0,1) during reset.

Figure 23. $\overline{OR}$-Flag Timing and First Word Fall Through When FIFO is Empty (FWFT mode)

operating configurations

SINGLE-DEVICE CONFIGURATION

A single SN74V215, SN74V225, SN74V235, or SN74V245 can be used when the application requirements are for 512/1024/2048/4096 words or fewer, respectively. These FIFOs are in a single-device configuration when the first load ($\overline{FL}$), write expansion in ($\overline{WXI}$) and read expansion in ($\overline{RXI}$) control inputs are configured as ($\overline{FL}$, $\overline{RXI}$, $\overline{WXI}$ = (0,0,0), (0,0,1), (0,1,0), (1,0,0), (1,1,0) or (1,1,1) during reset (see Figure 24).

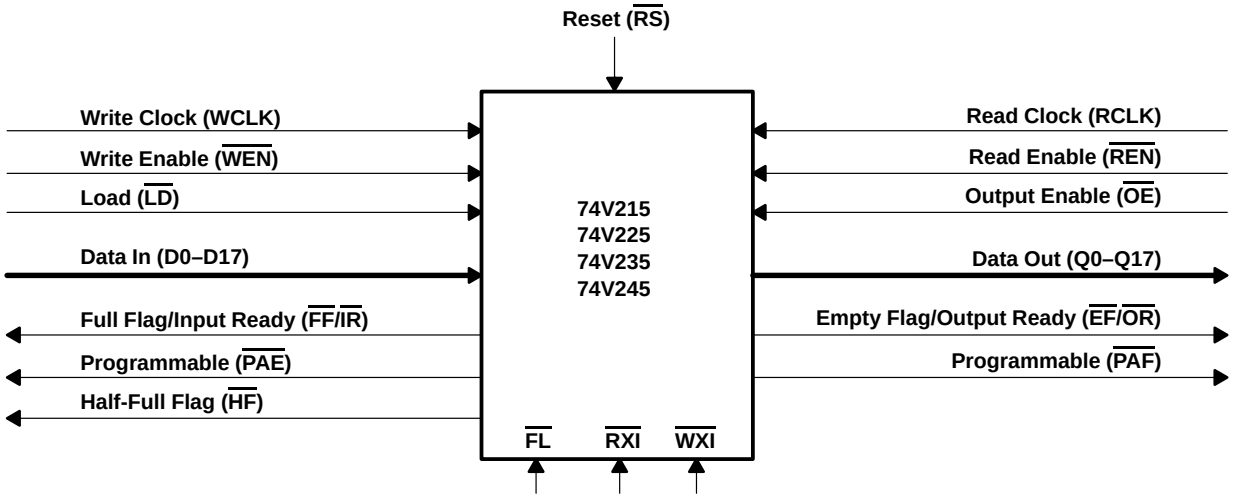

Figure 24. Block Diagram of Single 512 × 18, 1024 × 18, 2048 × 18, or 4096 × 18 Synchronous FIFO

operating configurations (continued)

WIDTH-EXPANSION CONFIGURATION

Word width may be increased simply by connecting together the control signals of multiple devices. Status flags can be detected from any one device. The exceptions are the empty flag/output ready and full flag/input ready. Because of variations in skew between RCLK and WCLK, it is possible for flag assertion and deassertion to vary by one cycle between FIFOs. To avoid problems, the user must create composite flags by gating the empty flags/output ready of every FIFO, and separately gating all full flags/input ready. Figure 25 demonstrates a 36-word width by using two SN74V215, SN74V225, SN74V235, or SN74V245 memories. Any word width can be attained by adding additional SN74V215, SN74V225, SN74V235, or SN74V245 memories. These FIFOs are in a single-device configuration when the first load ($\overline{FL}$), write expansion in ($\overline{WXI}$), and read expansion in ($\overline{RXI}$) control inputs are configured as ($\overline{FL}$, $\overline{RXI}$, $\overline{WXI}$ = (0,0,0), (0,0,1), (0,1,0), (1,0,0), (1,0,1) or (1,1,0) during reset (see Figure 25).

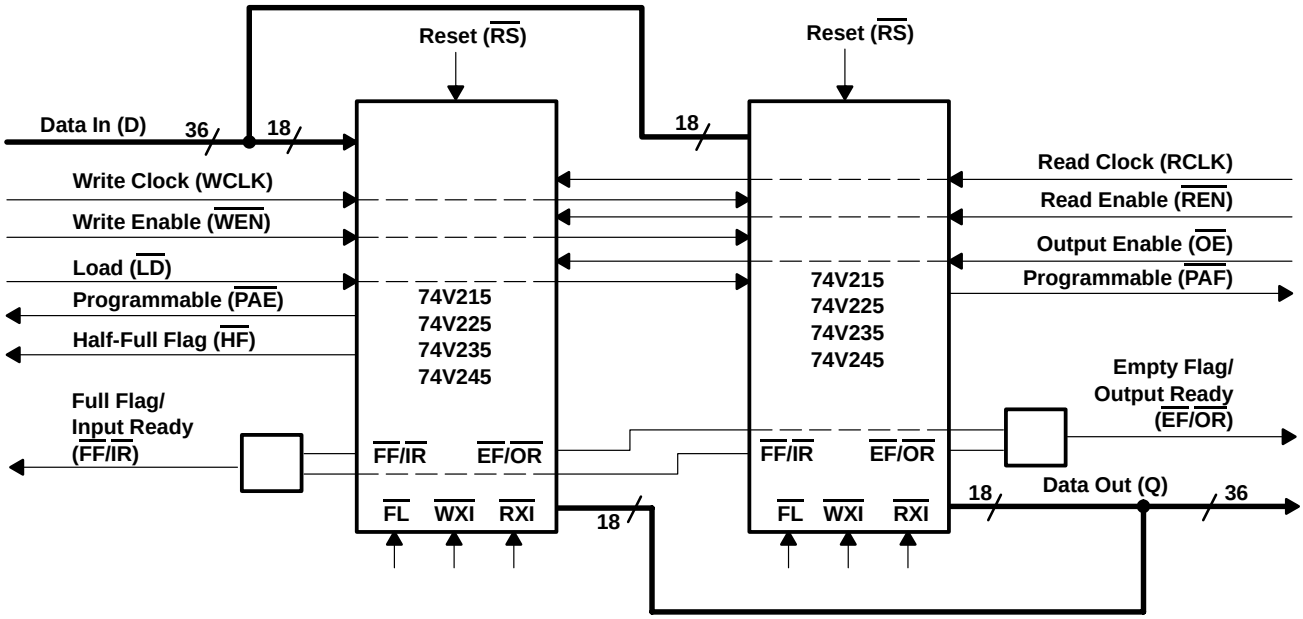

NOTE A: Do not connect any output control signals directly together.

Figure 25. Block Diagram of 512 × 36, 1024 × 36, 2048 × 36, or 4096 × 36 Synchronous FIFO Memory Used in a Width-Expansion Configuration

DEPTH-EXPANSION CONFIGURATION, DAISY-CHAIN TECHNIQUE (WITH PROGRAMMABLE FLAGS)

These devices can be adapted easily to applications requiring more than 512, 1024, 2048, or 4096 words of buffering. Figure 26 shows depth expansion using three SN74V215, SN74V225, SN74V235, or SN74V245 memories. Maximum depth is limited only by signal loading.

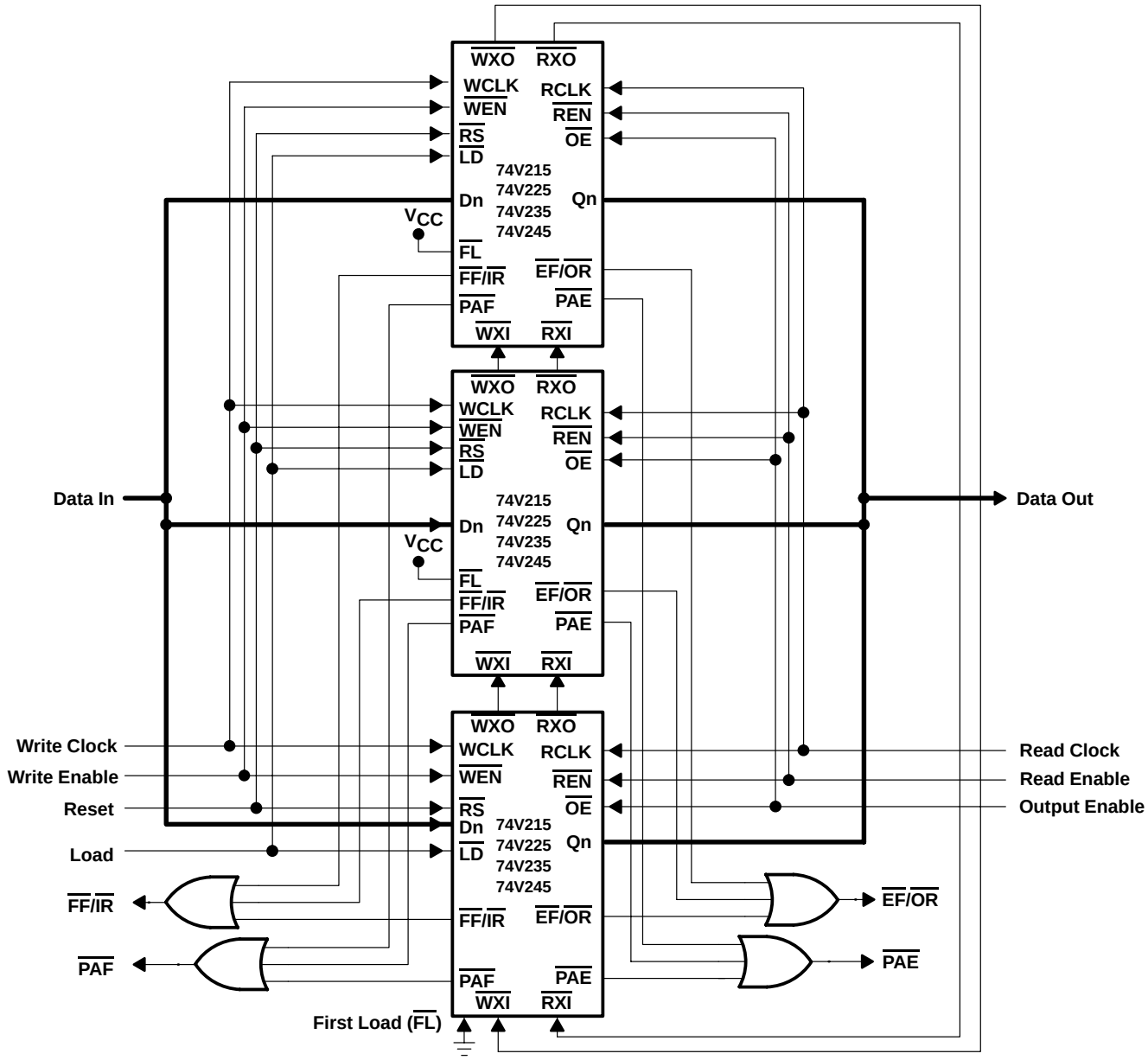

NOTES: A. The first device must be designated by grounding the first load ($\overline{FL}$) control input.
B. All other devices must have $\overline{FL}$ in the high state.
C. The write expansion out ($\overline{WXO}$) pin of each device must be tied to the write expansion in ($\overline{WXI}$) pin of the next device.
D. The read expansion out ($\overline{RXO}$) pin of each device must be tied to the read expansion in ($\overline{RXI}$) pin of the next device.
E. All load ($\overline{LD}$) pins are tied together.
F. The half-full flag ($\overline{HF}$) is not available in this depth-expansion configuration.
G. $\overline{EF}$, $\overline{FF}$, $\overline{PAE}$, and $\overline{PAF}$ are created with composite flags by ORing together every respective flag for monitoring. The composite $\overline{PAE}$ and $\overline{PAF}$ flags are not precise.
H. In daisy-chain mode, the flag outputs are single-register buffered and the partial flags are in asynchronous timing mode.

Figure 26. Block Diagram of 1536 × 18, 3072 × 18, 6144 × 18, 12288 × 18 Synchronous FIFO Memory With Programmable Flags Used in Depth-Expansion Configuration

operating configurations (continued)

DEPTH-EXPANSION CONFIGURATION (FWFT MODE)

In FWFT mode, the FIFOs can be connected in series (the data outputs of one FIFO connected to the data inputs of the next) with no external logic necessary. The resulting configuration provides a total depth equivalent to the sum of the depths associated with each single FIFO. NO TAG shows a depth expansion using two SN74V215, SN74V225, SN74V235, or SN74V245 memories.

Care should be taken to select FWFT mode during master reset for all FIFOs in the depth expansion configuration. The first word written to an empty configuration passes from one FIFO to the next (ripple down) until it finally appears at the outputs of the last FIFO in the chain. No read operation is necessary, but the RCLK of each FIFO must be free running. Each time the data word appears at the outputs of one FIFO, that device's $\overline{OR}$ line goes low, enabling a write to the next FIFO in line.

For an empty expansion configuration, the amount of time it takes for $\overline{OR}$ of the last FIFO in the chain to go low (i.e., valid data to appear on the last FIFO's outputs) after a word has been written to the first FIFO is the sum of the delays for each individual FIFO:

$$(N - 1) \times (4 \times \text{transfer clock}) + 3 \times T_{RCLK}$$

Where: N is the number of FIFOs in the expansion and T_{RCLK} is the RCLK period. Extra cycles should be added for the possibility that the t_{SKEW1} specification is not met between WCLK and transfer clock, or RCLK and transfer clock, for the $\overline{OR}$ flag.

The ripple-down delay is noticeable only for the first word written to an empty depth-expansion configuration. There is no delay evident for subsequent words written to the configuration.

The first free location created by reading from a full depth-expansion configuration bubbles up from the last FIFO to the previous one until finally it moves into the first FIFO of the chain. Each time a free location is created in one FIFO of the chain, that FIFO's $\overline{IR}$ line goes low, enabling the preceding FIFO to write a word to fill it.

For a full expansion configuration, the amount of time it takes for $\overline{IR}$ of the first FIFO in the chain to go low after a word has been read from the last FIFO is the sum of the delays for each individual FIFO:

$$(N - 1) \times (3 \times \text{transfer clock}) + 2T_{WCLK}$$

Where: N is the number of FIFOs in the expansion and T_{WCLK} is the WCLK period. Extra cycles should be added for the possibility that the t_{SKEW1} specification is not met between RCLK and transfer clock, or WCLK and transfer clock, for the $\overline{IR}$ flag.

The transfer clock line should be tied to either WCLK or RCLK, whichever is faster. Both these actions result in data moving, as quickly as possible, to the end of the chain and free locations to the beginning of the chain.

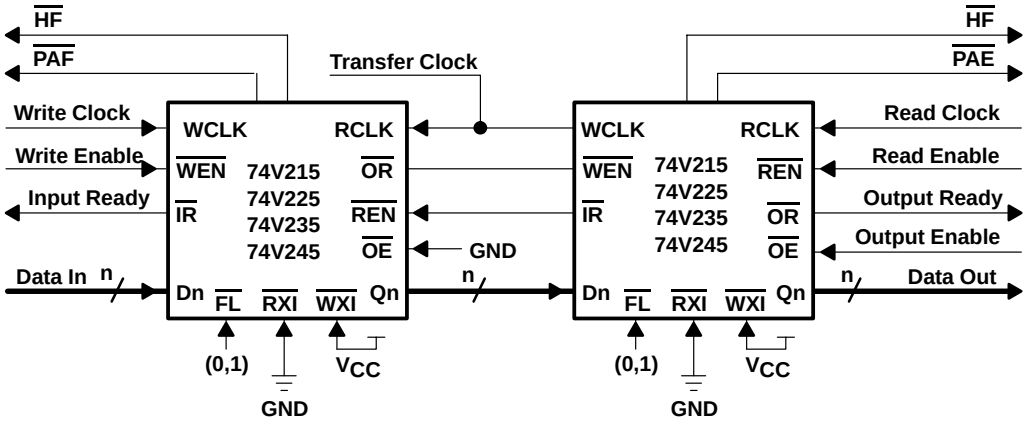

Figure 27. Block Diagram of 1024 × 18, 2048 × 18, 4096 × 18, 8192 × 18 Synchronous FIFO Memory With Programmable Flags Used in Depth-Expansion Configuration

absolute maximum ratings over operating free-air temperature range (unless otherwise noted)†

Supply voltage range, V_{CC} . . . . . –0.5 V to 5 V
Continuous output current, I_O (V_O = 0 to V_{CC}) . . . . . ±50 mA
Storage temperature range, T_{stg} . . . . . –55°C to 125°C

† Stresses beyond those listed under "absolute maximum ratings" may cause permanent damage to the device. These are stress ratings only, and functional operation of the device at these or any other conditions beyond those indicated under "recommended operating conditions" is not implied. Exposure to absolute-maximum-rated conditions for extended periods may affect device reliability.

recommended operating conditions

		MIN	TYP	MAX	UNIT
V_{CC}	Supply voltage	3.0	3.3	3.6	V
GND	Supply voltage	0	0	0	V
V_{IH}	High-level input voltage	2		5	V
V_{IL}	Low-level input voltage			0.8	V
T_A	Operating free-air temperature	0		70	°C

electrical characteristics over recommended operating conditions (unless otherwise noted)

PARAMETER	TEST CONDITIONS		MIN	TYP	MAX	UNIT
V_{OH}	V_{CC} = 3.0 V,	I_{OH} = –2 mA	2.4			V
V_{OL}	V_{CC} = 3.0 V,	I_{OL} = 8 mA			0.4	V
I_I	V_{CC} = 3.6 V,	V_I = V_{CC} to 0.4 V			±1	µA
I_{OZ}	V_{CC} = 3.6 V,	$\overline{OE} \geq V_{IH}$, V_O = V_{CC} to 0.4 V			±10	µA
I_{CC1}	V_{CC} = 3.3 V,	See Notes 1, 2, and 3			35	mA
I_{CC2}	V_{CC} = 3.6 V,	See Notes 1 and 4			5	mA
C_{IN}	V_I = 0, T_A = 25°C,	f = 1 MHz		10		pF
C_{OUT}	V_O = 0, T_A = 25°C,	f = 1 MHz, Output deselected, ($\overline{OE} \geq V_{IH}$)		10		pF

NOTES: 1. Tested with outputs disabled (I_{OUT} = 0)
2. RCLK and WCLK switch at 20 MHz and data inputs switch at 10 MHz.
3. Typical $I_{CC1} = 2.04 + 0.88 \times f_S + 0.02 \times C_L \times f_S$ (in mA). These equations are valid under the following conditions: V_{CC} = 3.3 V, T_A = 25°C, f_S = WCLK frequency = RCLK frequency (in MHz, using TTL levels), data switching at $f_S/2$, C_L = capacitive load (in pF).
4. All inputs = (V_{CC} – 0.2 V) or (GND + 0.2 V), except RCLK and WCLK, which switch at 20 MHz.

timing requirements over recommended ranges of supply voltage and operating free-air temperature (see Figure 28 through Figure 23)

		’74V215-7 ’74V225-7 ’74V235-7 ’74V245-7		’74V215-10 ’74V225-10 ’74V235-10 ’74V245-10		’74V215-15 ’74V225-15 ’74V235-15 ’74V245-15		’74V215-20 ’74V225-20 ’74V235-20 ’74V245-20		UNIT
		MIN	MAX	MIN	MAX	MIN	MAX	MIN	MAX	
f_{clock}	Clock cycle frequency		133		100		66.7		50	MHz
t_A	Data access time	2	5	2	6.5	2	10	2	12	ns
t_{CLK}	Clock cycle time	7.5		10		15		20		ns
t_{CLKH}	Clock high time	3.5		4.5		6		8		ns
t_{CLKL}	Clock low time	3.5		4.5		6		8		ns
t_{DS}	Data setup time	2.5		3		4		5		ns
t_{DH}	Data hold time	0.5		0.5		1		1		ns
t_{ENS}	Enable setup time	2.5		3		4		5		ns
t_{ENH}	Enable hold time	0.5		0.5		1		1		ns
t_{LDS}	Load setup time	3.5		3.5		4		4		ns
t_{LDH}	Load hold time	0.5		0.5		1		1		ns
t_{RS}	Reset pulse width†	10		10		15		20		ns
t_{RSS}	Reset setup time	8		8		10		12		ns
t_{RSR}	Reset recovery time	8		8		10		12		ns
t_{RSF}	Reset to flag and output time		15		15		15		20	ns
t_{OLZ}	Output enable to output in low Z	0		0		0		0		ns
t_{OE}	Output enable to output valid		6		6	3	8	3	10	ns
t_{OHZ}	Output enable to output in high Z	1	6	1	6	3	8	3	10	ns
t_{WFF}	Write clock to Full flag		5		6.5		10		12	ns
t_{REF}	Read clock to Empty flag		5		6.5		10		12	ns
t_{PAFA}	Clock to asynchronous programmable Almost-Full flag		12.5		17		20		22	ns
t_{PAFS}	Write clock to synchronous programmable Almost-Full flag		5		8		10		12	ns
t_{PAEA}	Clock to asynchronous programmable Almost-Empty flag		12.5		17		20		22	ns
t_{PAES}	Read clock to synchronous programmable Almost-Empty flag		5		8		10		12	ns
t_{HF}	Clock to Half-Full flag		12.5		17		20		22	ns
t_{XO}	Clock to expansion out		5		6.5		10		12	ns
t_{XI}	Expansion in pulse duration	2.5		3		6.5		8		ns
t_{XIS}	Expansion in setup time	2.5		3		5		8		ns
t_{SKEW1}	Skew time between read clock and write clock for $\overline{FF}/\overline{IR}$ and $\overline{EF}/\overline{OR}$	5		5		6		8		ns
t_{SKEW2}	Skew time between read clock and write clock for $\overline{PAE}$ and $\overline{PAF}$ (synchronous only)	7		14		18		20		ns

† Pulse durations less than minimum values are not allowed.

PARAMETER MEASUREMENT INFORMATION

AC TEST CONDITIONS

Input Pulse Levels	GND to 3.0 V
Input Rise/Fall Times	3 ns
Input Timing Reference Levels	1.5 V
Output Reference Levels	1.5 V
Output Load for t_{CLK} = 10 ns, 15 ns	See A
Output Load for t_{CLK} = 7.5 ns	See B and C

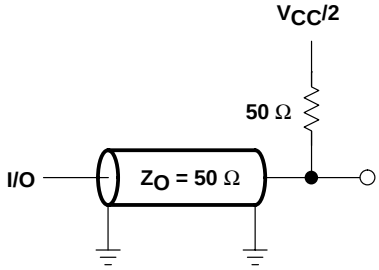

B. AC TEST LOAD FOR 7.5 SPEED GRADE

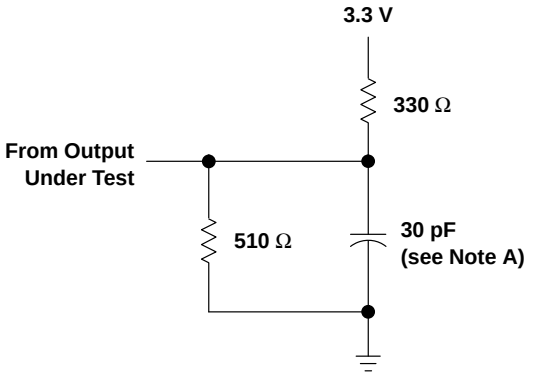

A. OUTPUT LOAD CIRCUIT FOR 10, 15, AND 20 SPEED GRADES

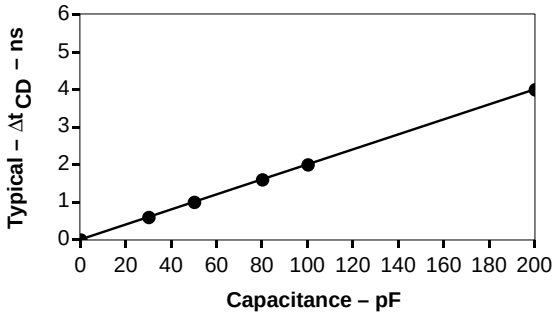

C. LUMPED CAPACITIVE LOAD, TYPICAL DERATING

NOTE A: Includes probe and jig capacitance

Figure 28. Load Circuits

PACKAGING INFORMATION

Orderable Device	Status [1]	Package Type	Package Drawing	Pins	Package Qty	Eco Plan [2]	Lead/Ball Finish	MSL Peak Temp [3]
CV215-10PAGG4	ACTIVE	TQFP	PAG	64	160	Green (RoHS & no Sb/Br)	CU NIPDAU	Level-3-260C-168 HR
CV235-7PAGG4	ACTIVE	TQFP	PAG	64	160	Green (RoHS & no Sb/Br)	CU NIPDAU	Level-3-260C-168 HR
CV245-10PAGG4	ACTIVE	TQFP	PAG	64	160	Green (RoHS & no Sb/Br)	CU NIPDAU	Level-3-260C-168 HR
CV245-7PAGG4	ACTIVE	TQFP	PAG	64	160	Green (RoHS & no Sb/Br)	CU NIPDAU	Level-3-260C-168 HR
SN74V215-10PAG	ACTIVE	TQFP	PAG	64	160	Green (RoHS & no Sb/Br)	CU NIPDAU	Level-3-260C-168 HR
SN74V215-15PAG	ACTIVE	TQFP	PAG	64	160	Green (RoHS & no Sb/Br)	CU NIPDAU	Level-3-260C-168 HR
SN74V215-20PAG	ACTIVE	TQFP	PAG	64	160	Green (RoHS & no Sb/Br)	CU NIPDAU	Level-3-260C-168 HR
SN74V215-7PAG	ACTIVE	TQFP	PAG	64	160	Green (RoHS & no Sb/Br)	CU NIPDAU	Level-3-260C-168 HR
SN74V225-10PAG	ACTIVE	TQFP	PAG	64	160	Green (RoHS & no Sb/Br)	CU NIPDAU	Level-3-260C-168 HR
SN74V225-15PAG	ACTIVE	TQFP	PAG	64	160	Green (RoHS & no Sb/Br)	CU NIPDAU	Level-3-260C-168 HR
SN74V225-20PAG	ACTIVE	TQFP	PAG	64	160	Green (RoHS & no Sb/Br)	CU NIPDAU	Level-3-260C-168 HR
SN74V225-7PAG	ACTIVE	TQFP	PAG	64	160	Green (RoHS & no Sb/Br)	CU NIPDAU	Level-3-260C-168 HR
SN74V235-10PAG	ACTIVE	TQFP	PAG	64	160	Green (RoHS & no Sb/Br)	CU NIPDAU	Level-3-260C-168 HR
SN74V235-15PAG	ACTIVE	TQFP	PAG	64	160	Green (RoHS & no Sb/Br)	CU NIPDAU	Level-3-260C-168 HR
SN74V235-20PAG	ACTIVE	TQFP	PAG	64	160	Green (RoHS & no Sb/Br)	CU NIPDAU	Level-3-260C-168 HR
SN74V235-7PAG	ACTIVE	TQFP	PAG	64	160	Green (RoHS & no Sb/Br)	CU NIPDAU	Level-3-260C-168 HR
SN74V245-10PAG	ACTIVE	TQFP	PAG	64	160	Green (RoHS & no Sb/Br)	CU NIPDAU	Level-3-260C-168 HR
SN74V245-15PAG	ACTIVE	TQFP	PAG	64	160	Green (RoHS & no Sb/Br)	CU NIPDAU	Level-3-260C-168 HR
SN74V245-20PAG	ACTIVE	TQFP	PAG	64	160	Green (RoHS & no Sb/Br)	CU NIPDAU	Level-3-260C-168 HR
SN74V245-7PAG	ACTIVE	TQFP	PAG	64	160	Green (RoHS & no Sb/Br)	CU NIPDAU	Level-3-260C-168 HR

[1] The marketing status values are defined as follows:
ACTIVE: Product device recommended for new designs.
LIFEBUY: TI has announced that the device will be discontinued, and a lifetime-buy period is in effect.
NRND: Not recommended for new designs. Device is in production to support existing customers, but TI does not recommend using this part in a new design.
PREVIEW: Device has been announced but is not in production. Samples may or may not be available.
OBSOLETE: TI has discontinued the production of the device.

[2] Eco Plan - The planned eco-friendly classification: Pb-Free (RoHS), Pb-Free (RoHS Exempt), or Green (RoHS & no Sb/Br) - please check http://www.ti.com/productcontent for the latest availability information and additional product content details.

TBD: The Pb-Free/Green conversion plan has not been defined.
Pb-Free (RoHS): TI's terms "Lead-Free" or "Pb-Free" mean semiconductor products that are compatible with the current RoHS requirements for all 6 substances, including the requirement that lead not exceed 0.1% by weight in homogeneous materials. Where designed to be soldered at high temperatures, TI Pb-Free products are suitable for use in specified lead-free processes.
Pb-Free (RoHS Exempt): This component has a RoHS exemption for either 1) lead-based flip-chip solder bumps used between the die and package, or 2) lead-based die adhesive used between the die and leadframe. The component is otherwise considered Pb-Free (RoHS compatible) as defined above.
Green (RoHS & no Sb/Br): TI defines "Green" to mean Pb-Free (RoHS compatible), and free of Bromine (Br) and Antimony (Sb) based flame retardants (Br or Sb do not exceed 0.1% by weight in homogeneous material)

(3) MSL, Peak Temp. -- The Moisture Sensitivity Level rating according to the JEDEC industry standard classifications, and peak solder temperature.

Important Information and Disclaimer: The information provided on this page represents TI's knowledge and belief as of the date that it is provided. TI bases its knowledge and belief on information provided by third parties, and makes no representation or warranty as to the accuracy of such information. Efforts are underway to better integrate information from third parties. TI has taken and continues to take reasonable steps to provide representative and accurate information but may not have conducted destructive testing or chemical analysis on incoming materials and chemicals. TI and TI suppliers consider certain information to be proprietary, and thus CAS numbers and other limited information may not be available for release.

In no event shall TI's liability arising out of such information exceed the total purchase price of the TI part(s) at issue in this document sold by TI to Customer on an annual basis.

OTHER QUALIFIED VERSIONS OF SN74V245 :
- Enhanced Product: SN74V245-EP

NOTE: Qualified Version Definitions:
- Enhanced Product - Supports Defense, Aerospace and Medical Applications

PAG (S-PQFP-G64) **PLASTIC QUAD FLATPACK**

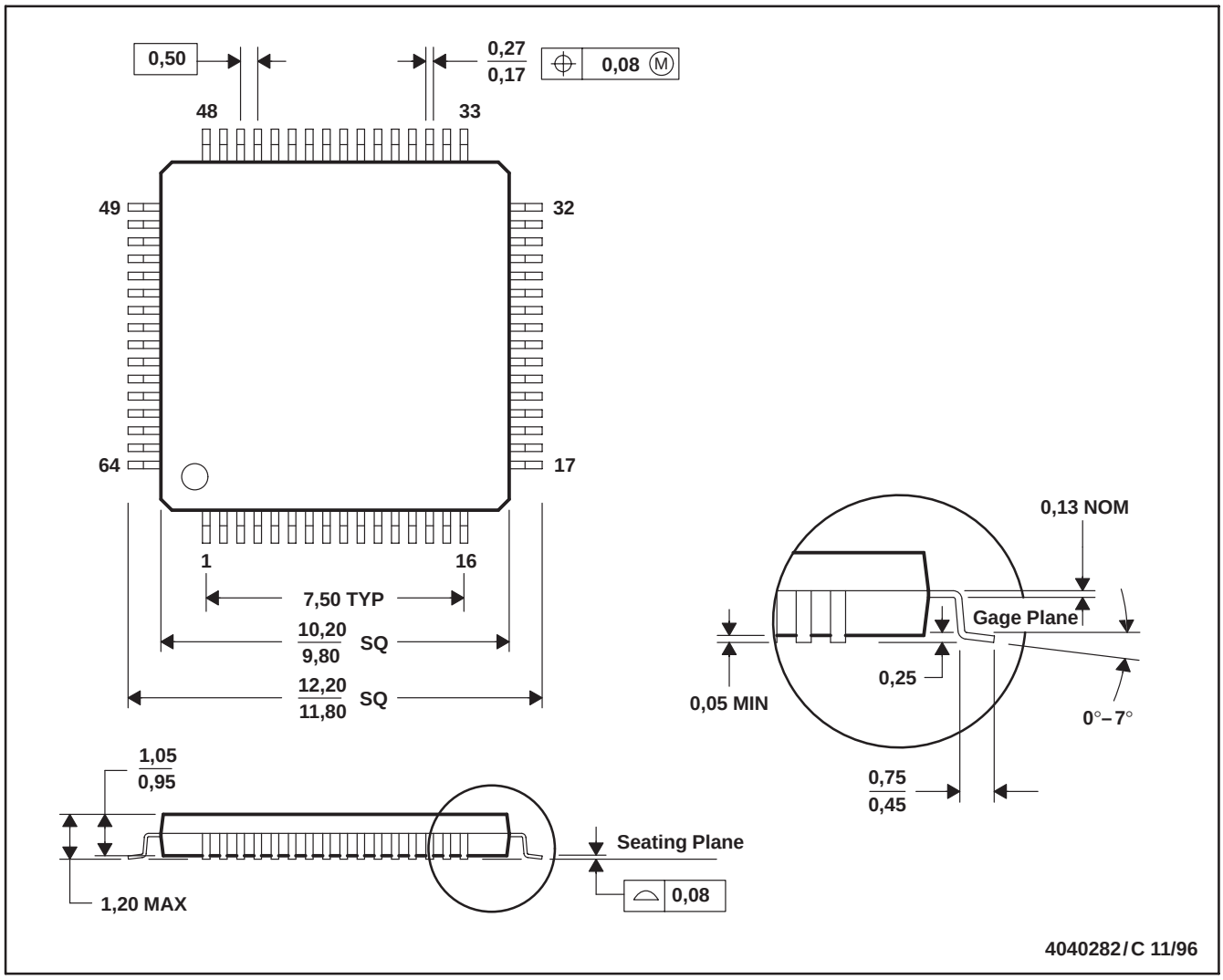

NOTES: A. All linear dimensions are in millimeters.
B. This drawing is subject to change without notice.
C. Falls within JEDEC MS-026

IMPORTANT NOTICE

Texas Instruments Incorporated and its subsidiaries (TI) reserve the right to make corrections, modifications, enhancements, improvements, and other changes to its products and services at any time and to discontinue any product or service without notice. Customers should obtain the latest relevant information before placing orders and should verify that such information is current and complete. All products are sold subject to TI's terms and conditions of sale supplied at the time of order acknowledgment.

TI warrants performance of its hardware products to the specifications applicable at the time of sale in accordance with TI's standard warranty. Testing and other quality control techniques are used to the extent TI deems necessary to support this warranty. Except where mandated by government requirements, testing of all parameters of each product is not necessarily performed.

TI assumes no liability for applications assistance or customer product design. Customers are responsible for their products and applications using TI components. To minimize the risks associated with customer products and applications, customers should provide adequate design and operating safeguards.

TI does not warrant or represent that any license, either express or implied, is granted under any TI patent right, copyright, mask work right, or other TI intellectual property right relating to any combination, machine, or process in which TI products or services are used. Information published by TI regarding third-party products or services does not constitute a license from TI to use such products or services or a warranty or endorsement thereof. Use of such information may require a license from a third party under the patents or other intellectual property of the third party, or a license from TI under the patents or other intellectual property of TI.

Reproduction of TI information in TI data books or data sheets is permissible only if reproduction is without alteration and is accompanied by all associated warranties, conditions, limitations, and notices. Reproduction of this information with alteration is an unfair and deceptive business practice. TI is not responsible or liable for such altered documentation. Information of third parties may be subject to additional restrictions.

Resale of TI products or services with statements different from or beyond the parameters stated by TI for that product or service voids all express and any implied warranties for the associated TI product or service and is an unfair and deceptive business practice. TI is not responsible or liable for any such statements.

TI products are not authorized for use in safety-critical applications (such as life support) where a failure of the TI product would reasonably be expected to cause severe personal injury or death, unless officers of the parties have executed an agreement specifically governing such use. Buyers represent that they have all necessary expertise in the safety and regulatory ramifications of their applications, and acknowledge and agree that they are solely responsible for all legal, regulatory and safety-related requirements concerning their products and any use of TI products in such safety-critical applications, notwithstanding any applications-related information or support that may be provided by TI. Further, Buyers must fully indemnify TI and its representatives against any damages arising out of the use of TI products in such safety-critical applications.

TI products are neither designed nor intended for use in military/aerospace applications or environments unless the TI products are specifically designated by TI as military-grade or "enhanced plastic." Only products designated by TI as military-grade meet military specifications. Buyers acknowledge and agree that any such use of TI products which TI has not designated as military-grade is solely at the Buyer's risk, and that they are solely responsible for compliance with all legal and regulatory requirements in connection with such use.

TI products are neither designed nor intended for use in automotive applications or environments unless the specific TI products are designated by TI as compliant with ISO/TS 16949 requirements. Buyers acknowledge and agree that, if they use any non-designated products in automotive applications, TI will not be responsible for any failure to meet such requirements.

Following are URLs where you can obtain information on other Texas Instruments products and application solutions:

Products		**Applications**	
Amplifiers	amplifier.ti.com	Audio	www.ti.com/audio
Data Converters	dataconverter.ti.com	Automotive	www.ti.com/automotive
DSP	dsp.ti.com	Broadband	www.ti.com/broadband
Clocks and Timers	www.ti.com/clocks	Digital Control	www.ti.com/digitalcontrol
Interface	interface.ti.com	Medical	www.ti.com/medical
Logic	logic.ti.com	Military	www.ti.com/military
Power Mgmt	power.ti.com	Optical Networking	www.ti.com/opticalnetwork
Microcontrollers	microcontroller.ti.com	Security	www.ti.com/security
RFID	www.ti-rfid.com	Telephony	www.ti.com/telephony
RF/IF and ZigBee® Solutions	www.ti.com/lprf	Video & Imaging	www.ti.com/video
		Wireless	www.ti.com/wireless

Mailing Address: Texas Instruments, Post Office Box 655303, Dallas, Texas 75265
Copyright © 2008, Texas Instruments Incorporated