SN74LVC2G126 Dual Bus Buffer Gate With 3-State Outputs

1 Features

- Available in the Texas Instruments NanoFree™ Package
- Supports 5-V V_{CC} Operation
- Inputs Accept Voltages to 5.5 V
- Max t_{pd} of 4ns at 3.3V
- Low Power Consumption, 10-µA Max I_{CC}
- ±24-mA Output Drive at 3.3 V
- Typical V_{OLP} (Output Ground Bounce) < 0.8 V at V_{CC} = 3.3 V, T_A = 25°C
- Typical V_{OHV} (Output VOH Undershoot) > 2 V at V_{CC} = 3.3 V, T_A = 25°C
- I_{off} Supports Live Insertion, Partial-Power-Down Mode, and Back-Drive Protection
- Can Be Used as a Down Translator to Translate Inputs From a Max of 5.5 V Down to the V_{CC} Level
- Latch-Up Performance Exceeds 100 mA Per JESD 78, Class II
- ESD Protection Exceeds JESD 22
  - 2000-V Human-Body Model
  - 1000-V Charged-Device Model

2 Applications

- Cable Modem Termination Systems
- High-Speed Data Acquisition and Generation
- Military: Radars and Sonars
- Motor Controls: High-Voltage
- Power Line Communication Modems
- SSDs: Internal or External
- Video Broadcasting and Infrastructure: Scalable Platforms
- Video Broadcasting: IP-Based Multi-Format Transcoders
- Video Communication Systems

3 Description

These bus transceivers are designed for 1.65-V to 3.6-V V_{CC} operation. The SN74LVC2G126 device is a dual line driver with 3-state output. The output is disabled when the output-enable input is low.

Device Information(1)

PART NUMBER	PACKAGE	BODY SIZE (NOM)
SN74LVC2G126DCT	SM8 (8)	2.95 mm × 2.80 mm
SN74LVC2G126DCU	VSSOP (8)	2.30 mm × 2.00 mm
SN74LVC2G126YZP	DSBGA (8)	1.91 mm × 0.91 mm

(1) For all available packages, see the orderable addendum at the end of the data sheet.

Simplified Schematic

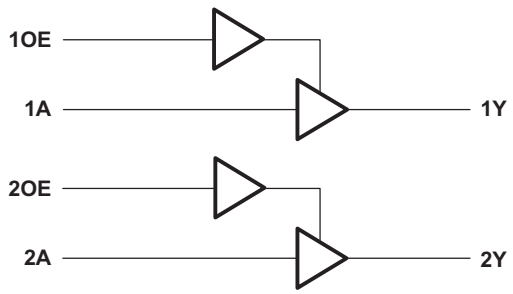

An IMPORTANT NOTICE at the end of this data sheet addresses availability, warranty, changes, use in safety-critical applications, intellectual property matters and other important disclaimers. PRODUCTION DATA.

Table of Contents

1 Features ... 1
2 Applications ... 1
3 Description ... 1
4 Revision History ... 2
5 Pin Configuration and Functions ... 3
6 Specifications ... 4
6.1 Absolute Maximum Ratings ... 4
6.2 ESD Ratings ... 4
6.3 Recommended Operating Conditions ... 5
6.4 Thermal Information ... 5
6.5 Electrical Characteristics ... 6
6.6 Switching Characteristics, –40°C to +85°C ... 6
6.7 Switching Characteristics, –40°C to +125°C ... 6
6.8 Operating Characteristics ... 7
6.9 Typical Characteristics ... 7
7 Parameter Measurement Information ... 8
8 Detailed Description ... 9
8.1 Overview ... 9
8.2 Functional Block Diagram ... 9
8.3 Feature Description ... 9
8.4 Device Functional Modes ... 9
9 Application and Implementation ... 10
9.1 Application Information ... 10
9.2 Typical Application ... 10
10 Power Supply Recommendations ... 11
11 Layout ... 11
11.1 Layout Guidelines ... 11
11.2 Layout Example ... 11
12 Device and Documentation Support ... 12
12.1 Receiving Notification of Documentation Updates 12
12.2 Community Resources ... 12
12.3 Trademarks ... 12
12.4 Electrostatic Discharge Caution ... 12
12.5 Glossary ... 12
13 Mechanical, Packaging, and Orderable Information ... 12

4 Revision History

NOTE: Page numbers for previous revisions may differ from page numbers in the current version.

Changes from Revision L (December 2014) to Revision M	Page
• Deleted Machine Model from *Features*	1
• Updated *Device Information* table	1
• Updated pinout images and *Pin Functions* table	3
• Added Operating junction temperature, T_J in *Absolute Maximum Ratings*	4
• Added *Receiving Notification of Documentation Updates* section and *Community Resources* section	12

Changes from Revision K (November 2013) to Revision L	Page
• Added *Applications*, *Device Information* table, *ESD Ratings* table, *Typical Characteristics*, *Feature Description* section, *Device Functional Modes*, *Application and Implementation* section, *Power Supply Recommendations* section, *Layout* section, *Device and Documentation Support* section, and *Mechanical, Packaging, and Orderable Information* section.	1
• Updated *Features*	1

Changes from Revision J (January 2007) to Revision K	Page
• Deleted *Ordering Information* table.	1
• Updated operating temperature range	5
• Added ESD warning	12

Copyright © 1999–2016, Texas Instruments Incorporated

5 Pin Configuration and Functions

DCT or DCU Package
8-Pin SM8 or VSSOP
Top View

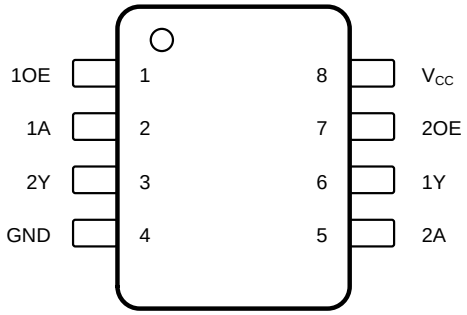

Not to scale

See mechanical drawings for dimensions.

YZP Package
8-Pin DSBGA
Bottom View

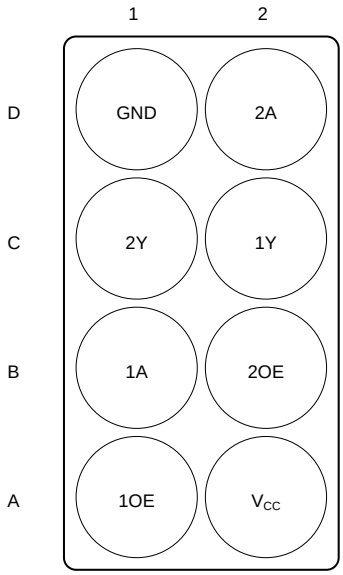

Not to scale

Pin Functions

PIN			TYPE	DESCRIPTION
NAME	SM8, VSSOP	DSBGA		
1A	2	B1	I	1A Input
1OE	1	A1	I	1OE Enable/Input
1Y	6	C2	O	1Y Output
2A	5	D2	I	2A Input
2OE	7	B2	I	2OE Enable/Input
2Y	3	C1	O	2Y Output
GND	4	D1	—	Ground Pin
V_{CC}	8	A2	—	Power Pin

Copyright © 1999–2016, Texas Instruments Incorporated

6 Specifications

6.1 Absolute Maximum Ratings

over operating free-air temperature range (unless otherwise noted)[1]

			MIN	MAX	UNIT
V_{CC}	Supply voltage		–0.5	6.5	V
V_I	Input voltage[2]		–0.5	6.5	V
V_O	Voltage range applied to any output in the high-impedance or power-off state[2]		–0.5	6.5	V
V_O	Voltage range applied to any output in the high or low state[2][3]		–0.5	V_{CC} + 0.5	V
I_{IK}	Input clamp current	$V_I < 0$		–50	mA
I_{OK}	Output clamp current	$V_O < 0$		–50	mA
I_O	Continuous output current			±50	mA
	Continuous current through V_{CC} or GND			±100	mA
T_J	Operating junction temperature			150	°C
T_{stg}	Storage temperature		–65	150	°C

(1) Stresses beyond those listed under *Absolute Maximum Ratings* may cause permanent damage to the device. These are stress ratings only, and functional operation of the device at these or any other conditions beyond those indicated under *Recommended Operating Conditions* is not implied. Exposure to absolute-maximum-rated conditions for extended periods may affect device reliability.
(2) The input negative-voltage and output voltage ratings may be exceeded if the input and output clamp-current ratings are observed.
(3) The value of V_{CC} is provided in the *Recommended Operating Conditions* table.

6.2 ESD Ratings

			VALUE	UNIT
$V_{(ESD)}$	Electrostatic discharge	Human body model (HBM), per ANSI/ESDA/JEDEC JS-001[1]	2000	V
		Charged device model (CDM), per JEDEC specification JESD22-C101[2]	1000	

(1) JEDEC document JEP155 states that 500-V HBM allows safe manufacturing with a standard ESD control process.
(2) JEDEC document JEP157 states that 250-V CDM allows safe manufacturing with a standard ESD control process.

Copyright © 1999–2016, Texas Instruments Incorporated

6.3 Recommended Operating Conditions

over operating free-air temperature range (unless otherwise noted)[1]

			MIN	MAX	UNIT
V_{CC}	Supply voltage	Operating	1.65	5.5	V
		Data retention only	1.5		
V_{IH}	High-level input voltage	V_{CC} = 1.65 V to 1.95 V	0.65 × V_{CC}		V
		V_{CC} = 2.3 V to 2.7 V	1.7		
		V_{CC} = 3 V to 3.6 V	2		
		V_{CC} = 4.5 V to 5.5 V	0.7 × V_{CC}		
V_{IL}	Low-level input voltage	V_{CC} = 1.65 V to 1.95 V		0.35 × V_{CC}	V
		V_{CC} = 2.3 V to 2.7 V		0.7	
		V_{CC} = 3 V to 3.6 V		0.8	
		V_{CC} = 4.5 V to 5.5 V		0.3 × V_{CC}	
V_I	Input voltage		0	5.5	V
V_O	Output voltage	High or low state	0	V_{CC}	V
		3-state	0	5.5	
I_{OH}	High-level output current	V_{CC} = 1.65 V		–4	mA
		V_{CC} = 2.3 V		–8	
		V_{CC} = 3 V		–16	
				–24	
		V_{CC} = 4.5 V		–32	
I_{OL}	Low-level output current	V_{CC} = 1.65 V		4	mA
		V_{CC} = 2.3 V		8	
		V_{CC} = 3 V		16	
				24	
		V_{CC} = 4.5 V		32	
Δt/Δv	Input transition rise or fall rate	V_{CC} = 1.8 V ± 0.15 V, 2.5 V ± 0.2 V		20	ns/V
		V_{CC} = 3.3 V ± 0.3 V		10	
		V_{CC} = 5 V ± 0.5 V		5	
T_A	Operating free-air temperature		–40	125	°C

(1) All unused inputs of the device must be held at V_{CC} or GND to ensure proper device operation. See *Implications of Slow or Floating CMOS Inputs*,SCBA004.

6.4 Thermal Information

THERMAL METRIC[1]		SN74LVC2G126			UNIT
		DCT (SM8)	DCU (VSSOP)	YZP (DSBGA)	
		8 PINS			
$R_{\theta JA}$	Junction-to-ambient thermal resistance	220	227	102	°C/W

(1) For more information about traditional and new thermal metrics, see the *Semiconductor and IC Package Thermal Metrics* application report.

6.5 Electrical Characteristics

over recommended operating free-air temperature range (unless otherwise noted)

PARAMETER		TEST CONDITIONS	V_{CC}	T_A = 25°C			–40°C to +85°C		–40°C to +125°C		UNIT
				MIN	TYP(1)	MAX	MIN	MAX	MIN	MAX	
V_{OH}		I_{OH} = –100 µA	1.65 V to 5.5 V	V_{CC} – 0.1			V_{CC} – 0.1		V_{CC} – 0.1		V
		I_{OH} = –4 mA	1.65 V	1.2			1.2		1.2		
		I_{OH} = –8 mA	2.3 V	1.9			1.9		1.9		
		I_{OH} = –16 mA	3 V	2.4			2.4		2.4		
		I_{OH} = –24 mA		2.3			2.3		2.3		
		I_{OH} = –32 mA	4.5 V	3.8			3.8		3.8		
V_{OL}		I_{OL} = 100 µA	1.65 V to 5.5 V			0.1		0.1		0.1	V
		I_{OL} = 4 mA	1.65 V			0.45		0.45		0.45	
		I_{OL} = 8 mA	2.3 V			0.3		0.3		0.3	
		I_{OL} = 16 mA	3 V			0.4		0.4		0.4	
		I_{OL} = 24 mA				0.55		0.55		0.55	
		I_{OL} = 32 mA	4.5 V			0.55		0.55		0.75	
I_I	A or OE inputs	V_I = 5.5 V or GND	0 to 5.5 V			±5		±5		±5	µA
I_{off}		V_I or V_O = 5.5 V	0			±10		±10		±10	µA
I_{OZ}		V_O = 0 to 5.5 V	3.6 V			10		10		10	µA
I_{CC}		V_I = 5.5 V or GND I_O = 0	1.65 V to 5.5 V			10		10		10	µA
ΔI_{CC}		One input at V_{CC} – 0.6 V, Other inputs at V_{CC} or GND	3 V to 5.5 V			500		500		500	µA
C_I	Data inputs	V_I = V_{CC} or GND	3.3 V		3.5						pF
	Control inputs				4						
C_o		V_O = V_{CC} or GND	3.3 V		6.5						pF

(1) All typical values are at V_{CC} = 3.3 V, T_A = 25°C.

6.6 Switching Characteristics, –40°C to +85°C

over recommended operating free-air temperature range (unless otherwise noted) (see Figure 3)

PARAMETER	FROM (INPUT)	TO (OUTPUT)	–40°C to +85°C								UNIT
			V_{CC} = 1.8 V ± 0.15 V		V_{CC} = 2.5 V ± 0.2 V		V_{CC} = 3.3 V ± 0.3 V		V_{CC} = 5 V ± 0.5 V		
			MIN	MAX	MIN	MAX	MIN	MAX	MIN	MAX	
t_{pd}	A	Y	3.5	9.8	1.7	4.9	1.4	4	1	3.2	ns
t_{en}	OE	Y	3.5	10	1.7	5	1.5	4.1	1	3.1	ns
t_{dis}	OE	Y	1.7	12.6	1	5.7	1	4.4	1	3.3	ns

6.7 Switching Characteristics, –40°C to +125°C

over recommended operating free-air temperature range (unless otherwise noted) (see Figure 3)

PARAMETER	FROM (INPUT)	TO (OUTPUT)	–40°C to +125°C								UNIT
			V_{CC} = 1.8 V ± 0.15 V		V_{CC} = 2.5 V ± 0.2 V		V_{CC} = 3.3 V ± 0.3 V		V_{CC} = 5 V ± 0.5 V		
			MIN	MAX	MIN	MAX	MIN	MAX	MIN	MAX	
t_{pd}	A	Y	3.5	10.8	1.7	5.9	1.4	5	1	3.7	ns
t_{en}	OE	Y	3.5	11	1.7	6	1.5	5.1	1	3.6	ns
t_{dis}	OE	Y	1.7	13.6	1	6.7	1	5.4	1	3.8	ns

Copyright © 1999–2016, Texas Instruments Incorporated

6.8 Operating Characteristics

T_A = 25°

PARAMETER			TEST CONDITIONS	V_{CC} = 1.8 V	V_{CC} = 2.5 V	V_{CC} = 3.3 V	V_{CC} = 5 V	UNIT
				TYP	TYP	TYP	TYP	
C_{pd}	Power dissipation capacitance	Outputs enabled	f = 10 MHz	19	19	20	22	pF
		Outputs disabled		2	2	2	3	

6.9 Typical Characteristics

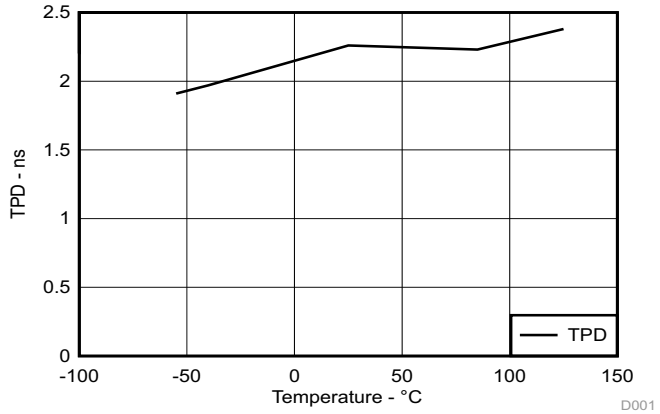

Figure 1. TPD Across Tempearture at 3.3 V_{CC}

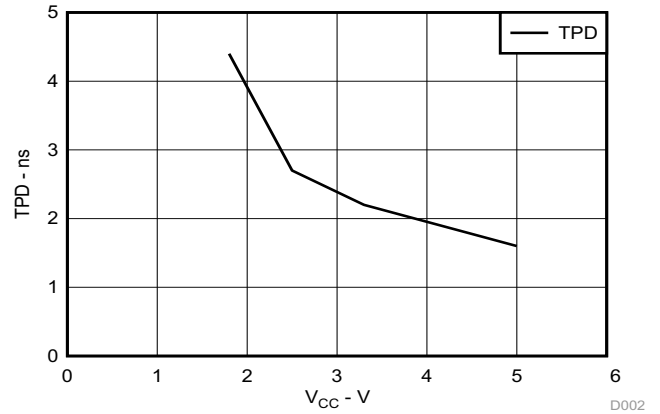

Figure 2. TPD Across V_{CC} at 25°C

7 Parameter Measurement Information

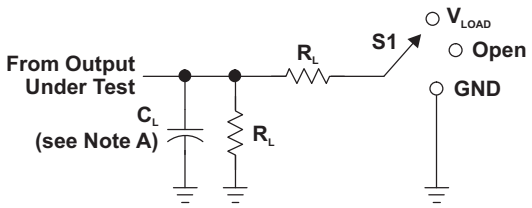

LOAD CIRCUIT

TEST	S1
t_{PLH}/t_{PHL}	Open
t_{PLZ}/t_{PZL}	V_{LOAD}
t_{PHZ}/t_{PZH}	GND

V_{CC}	INPUTS		V_M	V_{LOAD}	C_L	R_L	V_Δ
	V_I	t_r/t_f					
1.8 V ± 0.15 V	V_{CC}	≤2 ns	$V_{CC}/2$	2 × V_{CC}	30 pF	1 kΩ	0.15 V
2.5 V ± 0.2 V	V_{CC}	≤2 ns	$V_{CC}/2$	2 × V_{CC}	30 pF	500 Ω	0.15 V
3.3 V ± 0.3 V	3 V	≤2.5 ns	1.5 V	6 V	50 pF	500 Ω	0.3 V
5 V ± 0.5 V	V_{CC}	≤2.5 ns	$V_{CC}/2$	2 × V_{CC}	50 pF	500 Ω	0.3 V

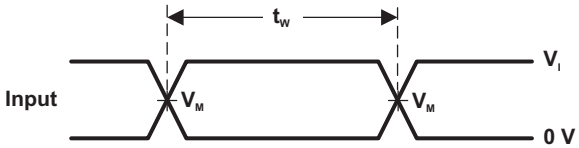

VOLTAGE WAVEFORMS
PULSE DURATION

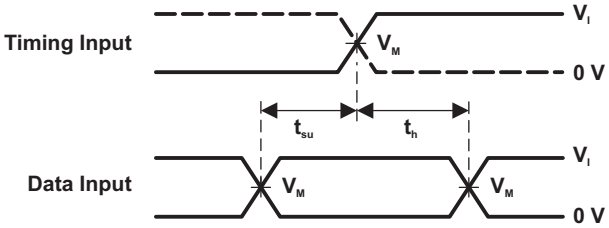

VOLTAGE WAVEFORMS
SETUP AND HOLD TIMES

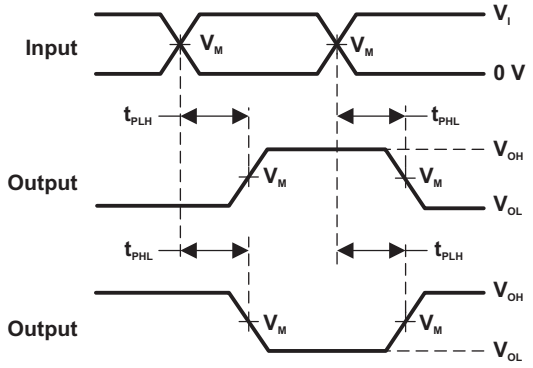

VOLTAGE WAVEFORMS
PROPAGATION DELAY TIMES
INVERTING AND NONINVERTING OUTPUTS

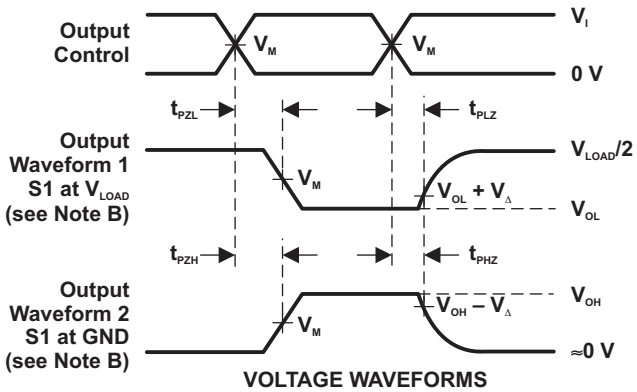

VOLTAGE WAVEFORMS
ENABLE AND DISABLE TIMES
LOW- AND HIGH-LEVEL ENABLING

NOTES: A. C_L includes probe and jig capacitance.
B. Waveform 1 is for an output with internal conditions such that the output is low, except when disabled by the output control. Waveform 2 is for an output with internal conditions such that the output is high, except when disabled by the output control.
C. All input pulses are supplied by generators having the following characteristics: PRR ≤ 10 MHz, Z_O = 50 Ω.
D. The outputs are measured one at a time, with one transition per measurement.
E. t_{PLZ} and t_{PHZ} are the same as t_{dis}.
F. t_{PZL} and t_{PZH} are the same as t_{en}.
G. t_{PLH} and t_{PHL} are the same as t_{pd}.
H. All parameters and waveforms are not applicable to all devices.

Figure 3. Load Circuit and Voltage Waveforms

Copyright © 1999–2016, Texas Instruments Incorporated

8 Detailed Description

8.1 Overview

The SN74LVC2G126 device contains a dual buffer gate with output enable control and performs the Boolean function Y = A.

This device is fully specified for partial-power-down applications using I_{off}. The I_{off} circuitry disables the outputs, preventing damaging current backflow through the device when it is powered down.

To ensure the high-impedance state during power up or power down, OE should be tied to V_{CC} through a pulldown resistor; the minimum value of the resistor is determined by the current-sourcing capability of the driver.

8.2 Functional Block Diagram

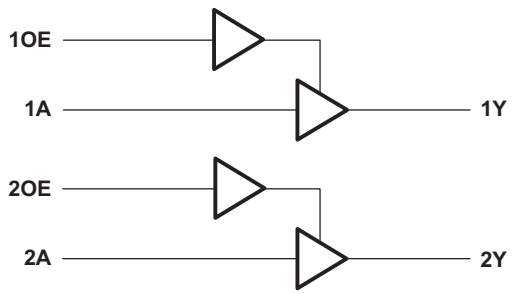

8.3 Feature Description

- 1.65 V to 5.5 V operating voltage range
- Allows down voltage translation
  - 5 V to 3.3 V
  - 5 V or 3.3 V to 1.8V
- Inputs accept voltages to 5.5 V
  - 5-V tolerance on input pin
- I_{off} feature
  - Allows voltage on the inputs and outputs when V_{CC} is 0 V
  - Able to prevent leakage when V_{CC} is 0 V

8.4 Device Functional Modes

Table 1 lists the functional modes of SN74LVC2G126.

Table 1. Function Table

INPUTS		OUTPUT
OE	A	Y
H	H	H
H	L	L
L	X	Z

9 Application and Implementation

NOTE

Information in the following applications sections is not part of the TI component specification, and TI does not warrant its accuracy or completeness. TI's customers are responsible for determining suitability of components for their purposes. Customers should validate and test their design implementation to confirm system functionality.

9.1 Application Information

The SN74LVC2G126 device is a high-drive CMOS device that can be used as an output enabled buffer with a high output drive, such as an LED application. It can produce 24 mA of drive current at 3.3 V, making it ideal for driving multiple outputs and good for high speed applications up to 100 MHz. The inputs are 5.5-V tolerant allowing it to translate down to V_{CC}.

9.2 Typical Application

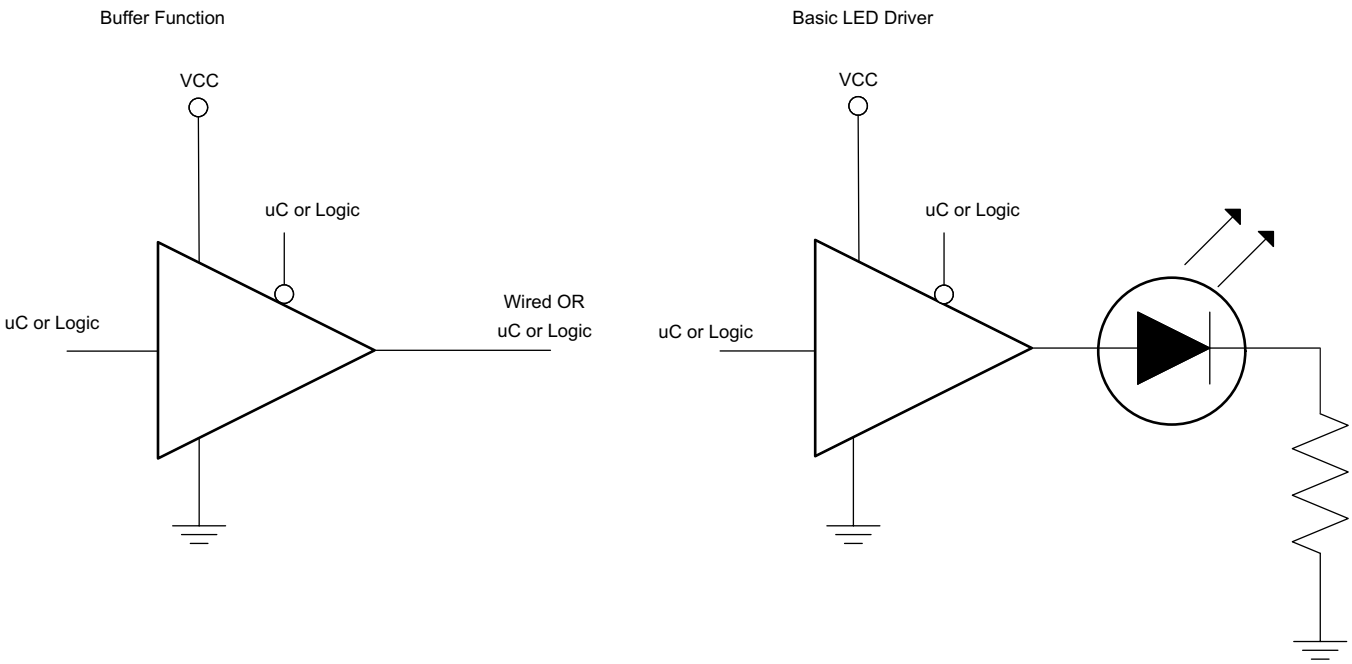

Figure 4. Application Schematic

9.2.1 Design Requirements

This device uses CMOS technology and has balanced output drive. Take care to avoid bus contention because it can drive currents that would exceed maximum limits. Outputs can be combined to produce higher drive but the high drive also creates faster edges into light loads so routing and load conditions should be considered to prevent ringing.

9.2.2 Detailed Design Procedure

1. Recommended Input Conditions:
   - For rise time and fall time specifications, see $\Delta t/\Delta V$ in the *Recommended Operating Conditions* table.
   - For specified high and low levels, see V_{IH} and V_{IL} in the *Recommended Operating Conditions* table.
   - Inputs are overvoltage tolerant allowing them to go as high as 5.5 V at any valid V_{CC}.
2. Recommended Output Conditions:
   - Load currents should not exceed 50 mA per output and 100 mA total for the part.

Copyright © 1999–2016, Texas Instruments Incorporated

Typical Application (continued)

9.2.3 Application Curve

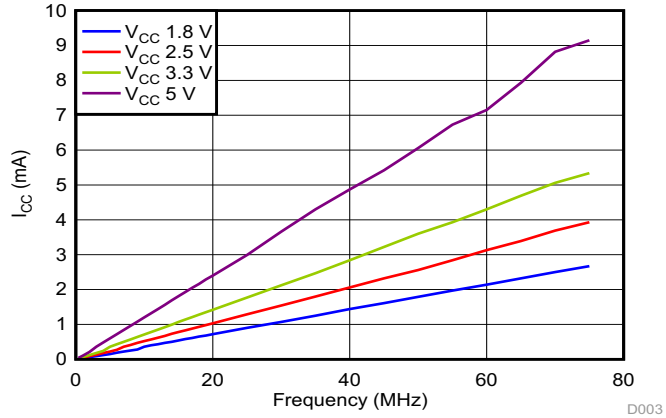

Figure 5. I_{CC} vs Frequency

10 Power Supply Recommendations

The power supply can be any voltage between the MIN and MAX supply voltage rating located in the *Recommended Operating Conditions* table.

Each V_{CC} terminal should have a good bypass capacitor to prevent power disturbance. For devices with a single supply, a 0.1-µF capacitor is recommended. If there are multiple V_{CC} terminals then 0.01-µF or 0.022-µF capacitors are recommended for each power terminal. It is ok to parallel multiple bypass capacitors to reject different frequencies of noise. Multiple bypass capacitors may be paralleled to reject different frequencies of noise. Install the bypass capacitor as close to the power terminal as possible for the best results.

11 Layout

11.1 Layout Guidelines

When using multiple bit logic devices, inputs should not float. In many cases, functions or parts of functions of digital logic devices are unused. Some examples are when only two inputs of a triple-input AND gate are used, or when only 3 of the 4-buffer gates are used. Such input pins should not be left unconnected because the undefined voltages at the outside connections result in undefined operational states.

Specified in Figure 6 are rules that must be observed under all circumstances. All unused inputs of digital logic devices must be connected to a high or low bias to prevent them from floating. The logic level that should be applied to any particular unused input depends on the function of the device. Generally they will be tied to GND or V_{CC}, whichever makes more sense or is more convenient. It is acceptable to float outputs unless the part is a transceiver. If the transceiver has an output enable pin, it will disable the outputs section of the part when asserted. This does not disable the input section of the I/Os so they also cannot float when disabled.

11.2 Layout Example

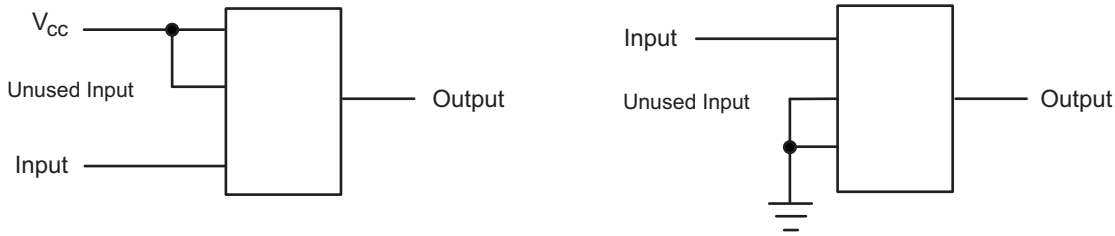

Figure 6. Layout Diagram

12 Device and Documentation Support

12.1 Receiving Notification of Documentation Updates

To receive notification of documentation updates, navigate to the device product folder on ti.com. In the upper right corner, click on *Alert me* to register and receive a weekly digest of any product information that has changed. For change details, review the revision history included in any revised document.

12.2 Community Resources

The following links connect to TI community resources. Linked contents are provided "AS IS" by the respective contributors. They do not constitute TI specifications and do not necessarily reflect TI's views; see TI's Terms of Use.

TI E2E™ Online Community ***TI's Engineer-to-Engineer (E2E) Community.*** Created to foster collaboration among engineers. At e2e.ti.com, you can ask questions, share knowledge, explore ideas and help solve problems with fellow engineers.

Design Support ***TI's Design Support*** Quickly find helpful E2E forums along with design support tools and contact information for technical support.

12.3 Trademarks

E2E is a trademark of Texas Instruments.
All other trademarks are the property of their respective owners.

12.4 Electrostatic Discharge Caution

These devices have limited built-in ESD protection. The leads should be shorted together or the device placed in conductive foam during storage or handling to prevent electrostatic damage to the MOS gates.

12.5 Glossary

SLYZ022 — *TI Glossary*.

This glossary lists and explains terms, acronyms, and definitions.

13 Mechanical, Packaging, and Orderable Information

The following pages include mechanical packaging and orderable information. This information is the most current data available for the designated devices. This data is subject to change without notice and revision of this document. For browser based versions of this data sheet, refer to the left hand navigation.

Copyright © 1999–2016, Texas Instruments Incorporated

PACKAGING INFORMATION

Orderable Device	Status (1)	Package Type	Package Drawing	Pins	Package Qty	Eco Plan (2)	Lead/Ball Finish (6)	MSL Peak Temp (3)	Op Temp (°C)	Device Marking (4/5)	Samples
74LVC2G126DCTRG4	ACTIVE	SM8	DCT	8	3000	Green (RoHS & no Sb/Br)	NIPDAU	Level-1-260C-UNLIM	-40 to 125	C26 Z	Samples
74LVC2G126DCUTG4	ACTIVE	VSSOP	DCU	8	250	Green (RoHS & no Sb/Br)	NIPDAU	Level-1-260C-UNLIM	-40 to 125	C26R	Samples
SN74LVC2G126DCTR	ACTIVE	SM8	DCT	8	3000	Green (RoHS & no Sb/Br)	NIPDAU	Level-1-260C-UNLIM	-40 to 125	C26 Z	Samples
SN74LVC2G126DCUR	ACTIVE	VSSOP	DCU	8	3000	Green (RoHS & no Sb/Br)	NIPDAU | SN	Level-1-260C-UNLIM	-40 to 125	(C26J, C26Q, C26R)	Samples
SN74LVC2G126DCUT	ACTIVE	VSSOP	DCU	8	250	Green (RoHS & no Sb/Br)	NIPDAU | SN	Level-1-260C-UNLIM	-40 to 125	(C26Q, C26R)	Samples
SN74LVC2G126YZPR	ACTIVE	DSBGA	YZP	8	3000	Green (RoHS & no Sb/Br)	SNAGCU	Level-1-260C-UNLIM	-40 to 125	(CN7, CNN)	Samples

(1) The marketing status values are defined as follows:
ACTIVE: Product device recommended for new designs.
LIFEBUY: TI has announced that the device will be discontinued, and a lifetime-buy period is in effect.
NRND: Not recommended for new designs. Device is in production to support existing customers, but TI does not recommend using this part in a new design.
PREVIEW: Device has been announced but is not in production. Samples may or may not be available.
OBSOLETE: TI has discontinued the production of the device.

(2) **RoHS:** TI defines "RoHS" to mean semiconductor products that are compliant with the current EU RoHS requirements for all 10 RoHS substances, including the requirement that RoHS substance do not exceed 0.1% by weight in homogeneous materials. Where designed to be soldered at high temperatures, "RoHS" products are suitable for use in specified lead-free processes. TI may reference these types of products as "Pb-Free".
RoHS Exempt: TI defines "RoHS Exempt" to mean products that contain lead but are compliant with EU RoHS pursuant to a specific EU RoHS exemption.
Green: TI defines "Green" to mean the content of Chlorine (Cl) and Bromine (Br) based flame retardants meet JS709B low halogen requirements of <=1000ppm threshold. Antimony trioxide based flame retardants must also meet the <=1000ppm threshold requirement.

(3) MSL, Peak Temp. - The Moisture Sensitivity Level rating according to the JEDEC industry standard classifications, and peak solder temperature.

(4) There may be additional marking, which relates to the logo, the lot trace code information, or the environmental category on the device.

(5) Multiple Device Markings will be inside parentheses. Only one Device Marking contained in parentheses and separated by a "~" will appear on a device. If a line is indented then it is a continuation of the previous line and the two combined represent the entire Device Marking for that device.

(6) Lead/Ball Finish - Orderable Devices may have multiple material finish options. Finish options are separated by a vertical ruled line. Lead/Ball Finish values may wrap to two lines if the finish value exceeds the maximum column width.

Important Information and Disclaimer: The information provided on this page represents TI's knowledge and belief as of the date that it is provided. TI bases its knowledge and belief on information provided by third parties, and makes no representation or warranty as to the accuracy of such information. Efforts are underway to better integrate information from third parties. TI has taken and continues to take reasonable steps to provide representative and accurate information but may not have conducted destructive testing or chemical analysis on incoming materials and chemicals. TI and TI suppliers consider certain information to be proprietary, and thus CAS numbers and other limited information may not be available for release.

In no event shall TI's liability arising out of such information exceed the total purchase price of the TI part(s) at issue in this document sold by TI to Customer on an annual basis.

OTHER QUALIFIED VERSIONS OF SN74LVC2G126 :

- Enhanced Product: SN74LVC2G126-EP

NOTE: Qualified Version Definitions:

- Enhanced Product - Supports Defense, Aerospace and Medical Applications

TAPE AND REEL INFORMATION

REEL DIMENSIONS

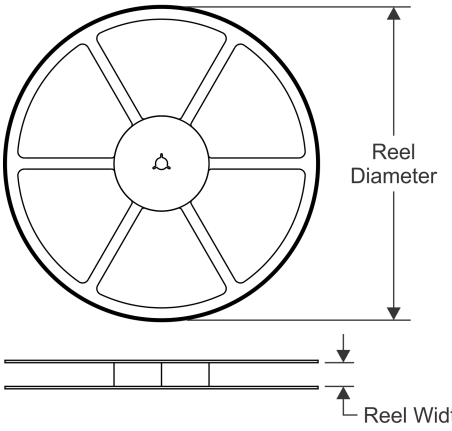

TAPE DIMENSIONS

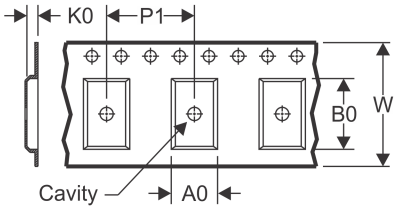

A0	Dimension designed to accommodate the component width
B0	Dimension designed to accommodate the component length
K0	Dimension designed to accommodate the component thickness
W	Overall width of the carrier tape
P1	Pitch between successive cavity centers

QUADRANT ASSIGNMENTS FOR PIN 1 ORIENTATION IN TAPE

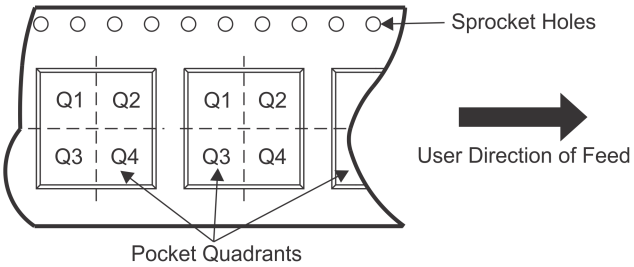

*All dimensions are nominal

Device	Package Type	Package Drawing	Pins	SPQ	Reel Diameter (mm)	Reel Width W1 (mm)	A0 (mm)	B0 (mm)	K0 (mm)	P1 (mm)	W (mm)	Pin1 Quadrant
74LVC2G126DCUTG4	VSSOP	DCU	8	250	180.0	8.4	2.25	3.35	1.05	4.0	8.0	Q3
SN74LVC2G126DCTR	SM8	DCT	8	3000	180.0	13.0	3.35	4.5	1.55	4.0	12.0	Q3
SN74LVC2G126DCUR	VSSOP	DCU	8	3000	180.0	8.4	2.25	3.35	1.05	4.0	8.0	Q3
SN74LVC2G126DCUR	VSSOP	DCU	8	3000	178.0	9.5	2.25	3.35	1.05	4.0	8.0	Q3
SN74LVC2G126DCUT	VSSOP	DCU	8	250	178.0	9.5	2.25	3.35	1.05	4.0	8.0	Q3
SN74LVC2G126YZPR	DSBGA	YZP	8	3000	178.0	9.2	1.02	2.02	0.63	4.0	8.0	Q1

TAPE AND REEL BOX DIMENSIONS

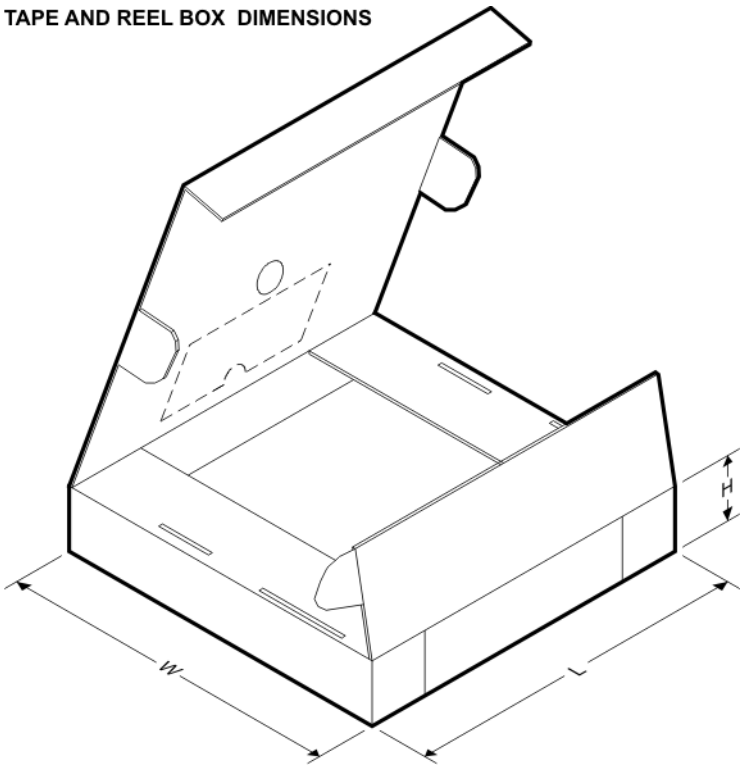

*All dimensions are nominal

Device	Package Type	Package Drawing	Pins	SPQ	Length (mm)	Width (mm)	Height (mm)
74LVC2G126DCUTG4	VSSOP	DCU	8	250	202.0	201.0	28.0
SN74LVC2G126DCTR	SM8	DCT	8	3000	182.0	182.0	20.0
SN74LVC2G126DCUR	VSSOP	DCU	8	3000	202.0	201.0	28.0
SN74LVC2G126DCUR	VSSOP	DCU	8	3000	202.0	201.0	28.0
SN74LVC2G126DCUT	VSSOP	DCU	8	250	202.0	201.0	28.0
SN74LVC2G126YZPR	DSBGA	YZP	8	3000	220.0	220.0	35.0

DCT (R-PDSO-G8) **PLASTIC SMALL-OUTLINE PACKAGE**

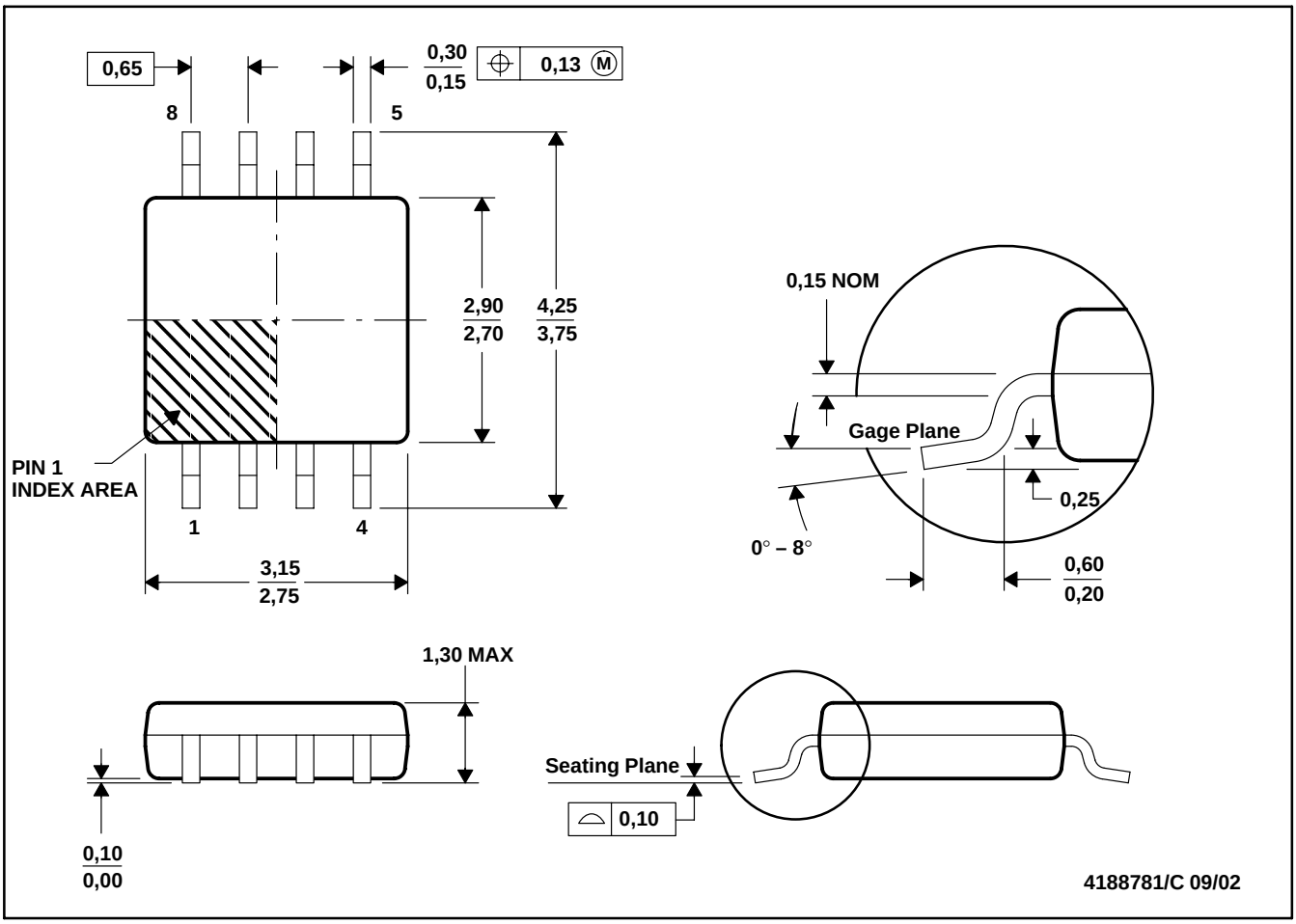

NOTES: A. All linear dimensions are in millimeters.
B. This drawing is subject to change without notice.
C. Body dimensions do not include mold flash or protrusion
D. Falls within JEDEC MO-187 variation DA.

DCT (R-PDSO-G8) PLASTIC SMALL OUTLINE

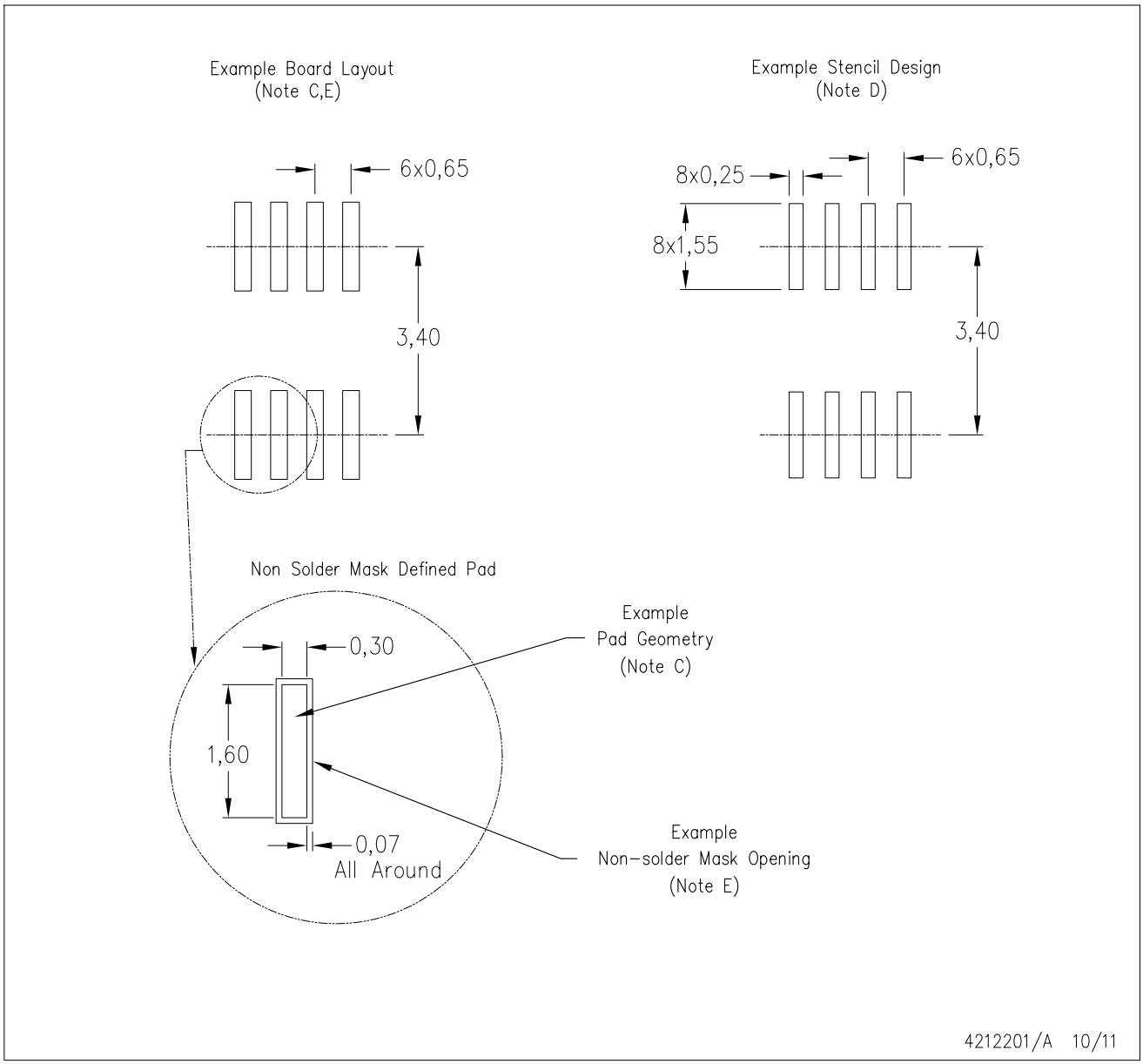

NOTES:
A. All linear dimensions are in millimeters.
B. This drawing is subject to change without notice.
C. Publication IPC-7351 is recommended for alternate designs.
D. Laser cutting apertures with trapezoidal walls and also rounding corners will offer better paste release. Customers should contact their board assembly site for stencil design recommendations. Refer to IPC-7525.
E. Customers should contact their board fabrication site for solder mask tolerances between and around signal pads.

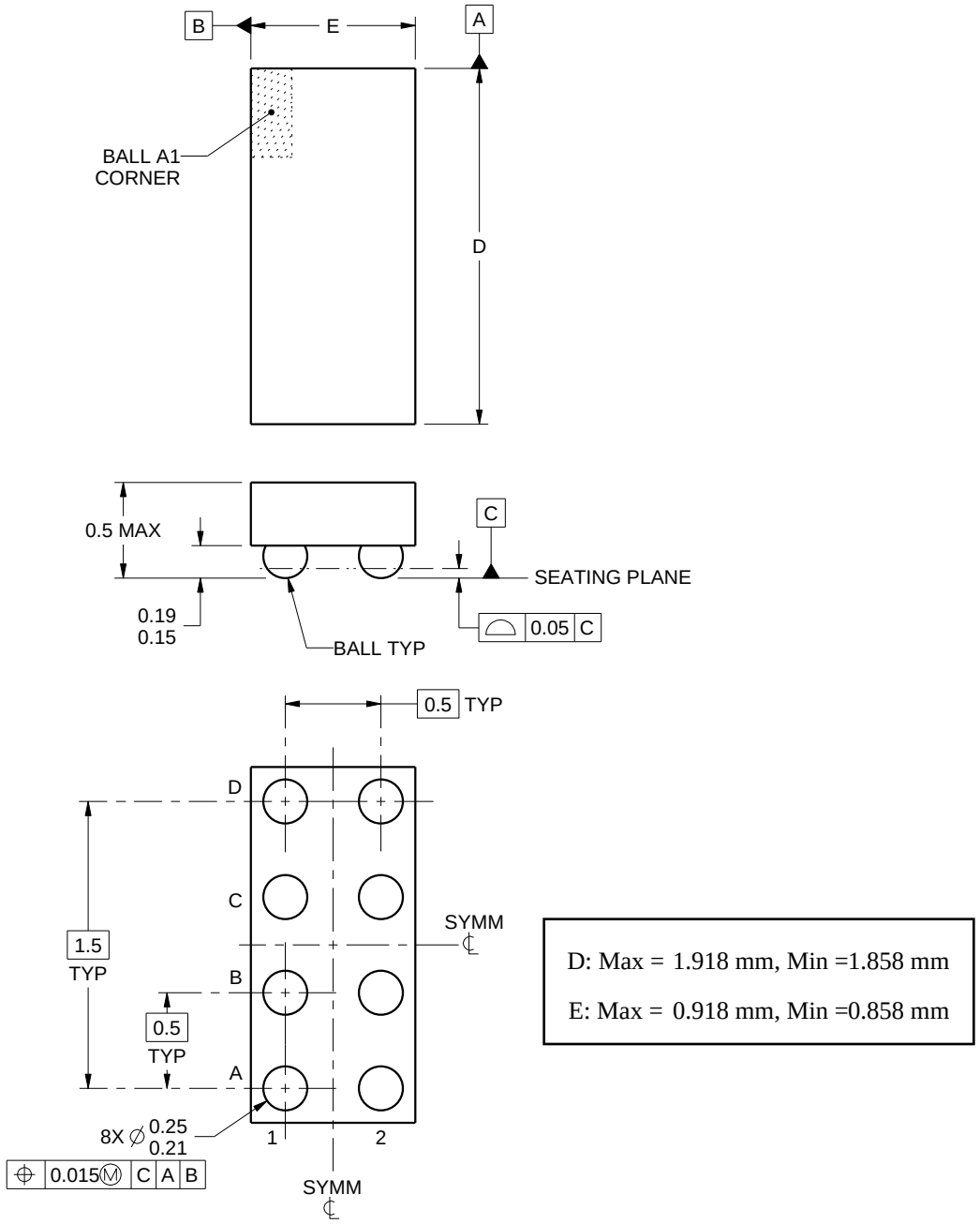

NOTES:

1. All linear dimensions are in millimeters. Any dimensions in parenthesis are for reference only. Dimensioning and tolerancing per ASME Y14.5M.
2. This drawing is subject to change without notice.

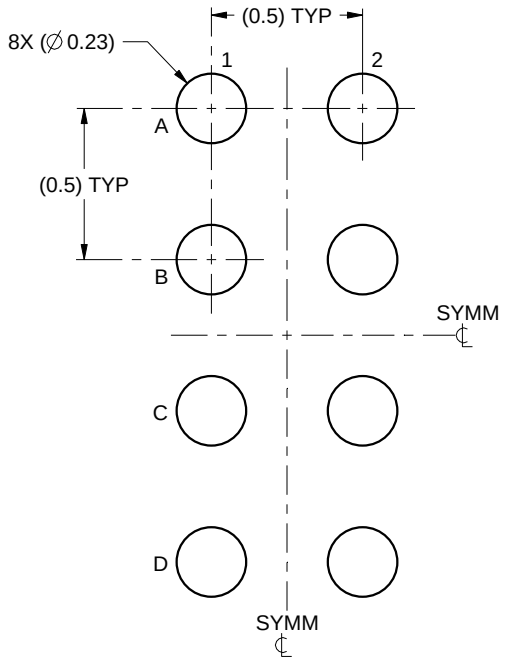

LAND PATTERN EXAMPLE
SCALE:40X

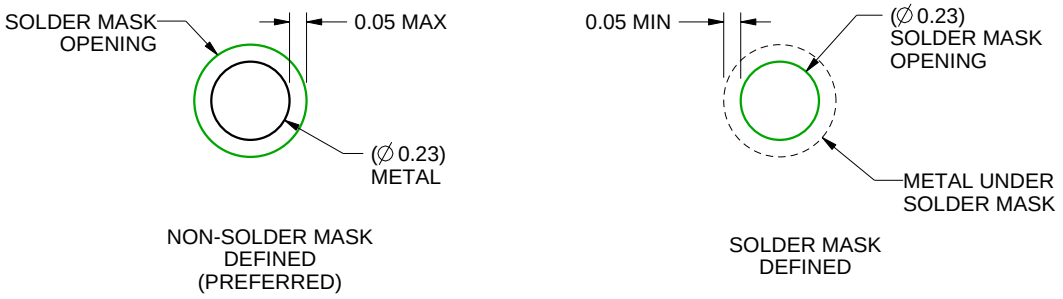

SOLDER MASK DETAILS
NOT TO SCALE

4223082/A 07/2016

NOTES: (continued)

3. Final dimensions may vary due to manufacturing tolerance considerations and also routing constraints.
   For more information, see Texas Instruments literature number SNVA009 (www.ti.com/lit/snva009).

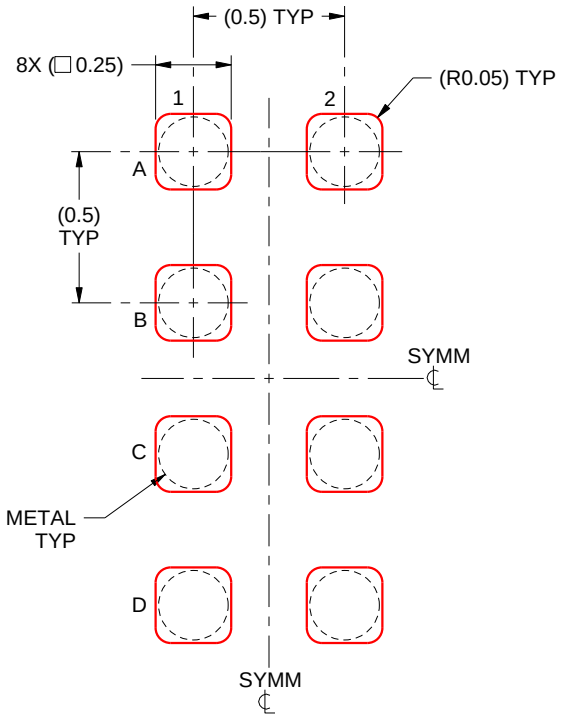

SOLDER PASTE EXAMPLE
BASED ON 0.1 mm THICK STENCIL
SCALE:40X

4223082/A 07/2016

NOTES: (continued)

4. Laser cutting apertures with trapezoidal walls and rounded corners may offer better paste release.

DCU (R–PDSO–G8) PLASTIC SMALL–OUTLINE PACKAGE (DIE DOWN)

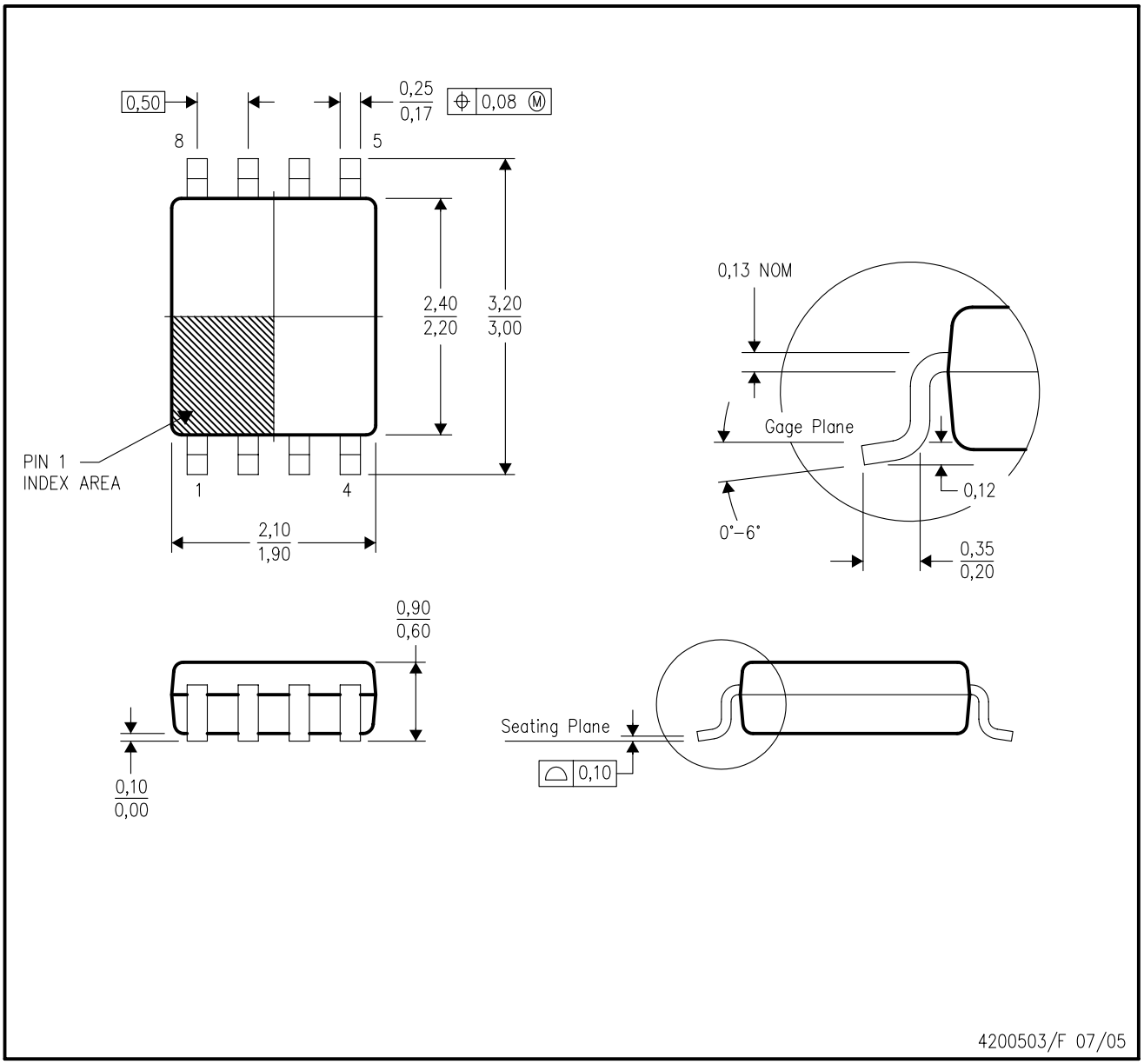

NOTES:
A. All linear dimensions are in millimeters.
B. This drawing is subject to change without notice.
C. Body dimensions do not include mold flash or protrusion. Mold flash and protrusion shall not exceed 0.15 per side.
D. Falls within JEDEC MO–187 variation CA.

DCU (S–PDSO–G8) PLASTIC SMALL OUTLINE PACKAGE (DIE DOWN)

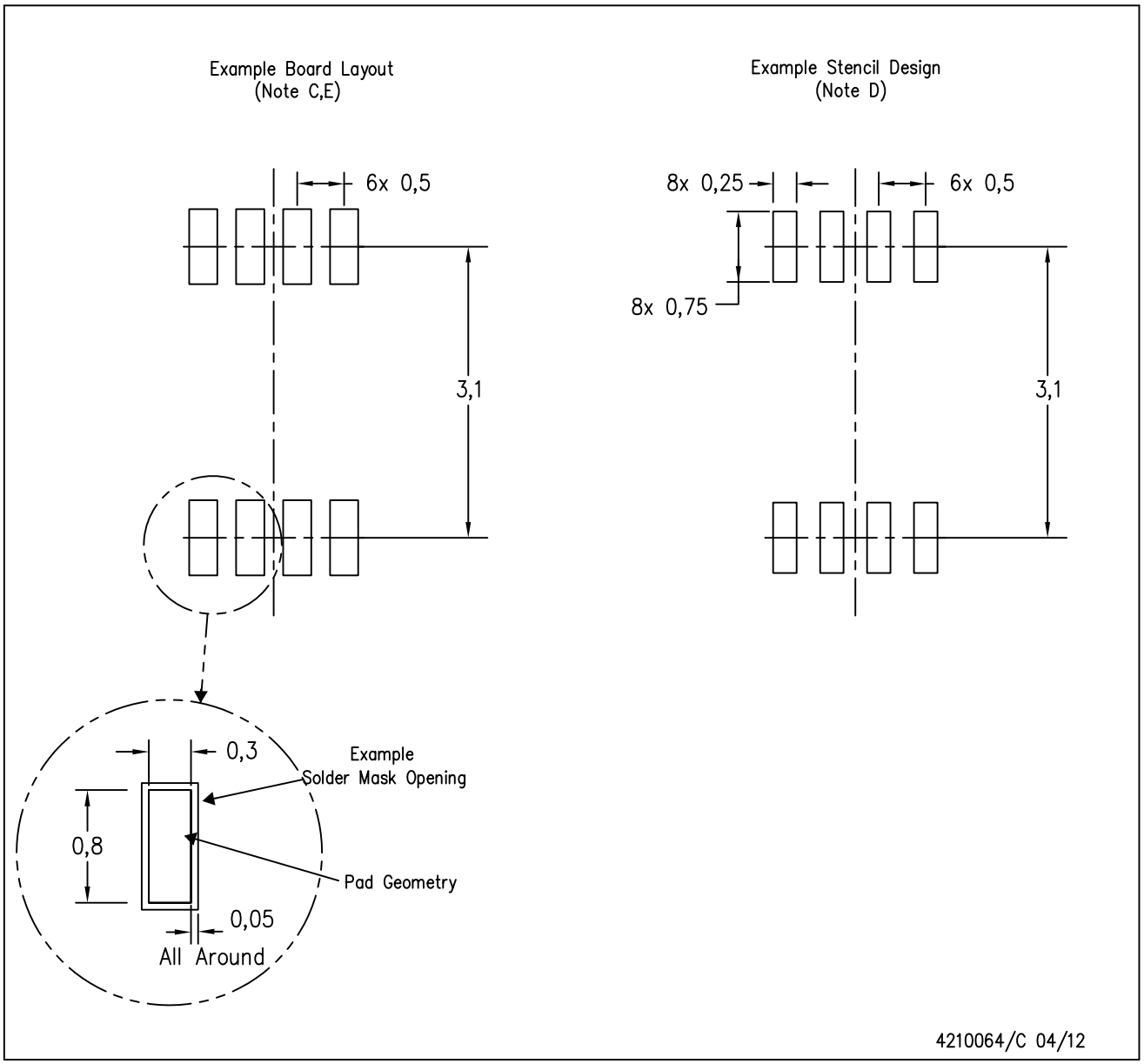

NOTES:
A. All linear dimensions are in millimeters.
B. This drawing is subject to change without notice.
C. Publication IPC–7351 is recommended for alternate designs.
D. Laser cutting apertures with trapezoidal walls and also rounding corners will offer better paste release. Customers should contact their board assembly site for stencil design recommendations. Refer to IPC–7525 for other stencil recommendations.
E. Customers should contact their board fabrication site for solder mask tolerances between and around signal pads.

IMPORTANT NOTICE AND DISCLAIMER

TI PROVIDES TECHNICAL AND RELIABILITY DATA (INCLUDING DATASHEETS), DESIGN RESOURCES (INCLUDING REFERENCE DESIGNS), APPLICATION OR OTHER DESIGN ADVICE, WEB TOOLS, SAFETY INFORMATION, AND OTHER RESOURCES “AS IS” AND WITH ALL FAULTS, AND DISCLAIMS ALL WARRANTIES, EXPRESS AND IMPLIED, INCLUDING WITHOUT LIMITATION ANY IMPLIED WARRANTIES OF MERCHANTABILITY, FITNESS FOR A PARTICULAR PURPOSE OR NON-INFRINGEMENT OF THIRD PARTY INTELLECTUAL PROPERTY RIGHTS.

These resources are intended for skilled developers designing with TI products. You are solely responsible for (1) selecting the appropriate TI products for your application, (2) designing, validating and testing your application, and (3) ensuring your application meets applicable standards, and any other safety, security, or other requirements. These resources are subject to change without notice. TI grants you permission to use these resources only for development of an application that uses the TI products described in the resource. Other reproduction and display of these resources is prohibited. No license is granted to any other TI intellectual property right or to any third party intellectual property right. TI disclaims responsibility for, and you will fully indemnify TI and its representatives against, any claims, damages, costs, losses, and liabilities arising out of your use of these resources.

TI’s products are provided subject to TI’s Terms of Sale (www.ti.com/legal/termsofsale.html) or other applicable terms available either on ti.com or provided in conjunction with such TI products. TI’s provision of these resources does not expand or otherwise alter TI’s applicable warranties or warranty disclaimers for TI products.

Mailing Address: Texas Instruments, Post Office Box 655303, Dallas, Texas 75265
Copyright © 2020, Texas Instruments Incorporated