Ultra-Configurable Multiple-Function Gate With 3-State Output

Check for Samples: SN74LVC1G99

FEATURES

- **Available in Texas Instruments NanoFree™ Package**
- **Supports 5-V V_{CC} Operation**
- **Inputs Accept Voltages to 5.5 V**
- **Supports Down Translation to V_{CC}**
- **Max t_{pd} of 6.7 ns at 3.3 V**
- **Low Power Consumption, 10-µA Max I_{CC}**
- **±24-mA Output Drive at 3.3 V**
- **Offers Nine Different Logic Functions in a Single Package**
- **I_{off} Supports Live Insertion, Partial-Power-Down Mode, and Back-Drive Protection**
- **Input Hysteresis Allows for Slow Input Transition Time and Better Noise Immunity at Input**
- **Latch-Up Performance Exceeds 100 mA Per JESD 78, Class II**
- **ESD Protection Exceeds JESD 22**
  - **2000-V Human-Body Model (A114-A)**
  - **200-V Machine Model (A115-A)**
  - **1000-V Charged-Device Model (C101)**

DESCRIPTION

The SN74LVC1G99 device is operational from 1.65 V to 5.5 V.

The SN74LVC1G99 device features configurable multiple functions with a 3-state output. The output is disabled when the output-enable ($\overline{OE}$) input is high. When $\overline{OE}$ is low, the output state is determined by 16 patterns of 4-bit input. The user can choose logic functions, such as MUX, AND, OR, NAND, NOR, XOR, XNOR, inverter, and buffer. All inputs can be connected to V_{CC} or GND.

This device functions as an independent inverter, but because of Schmitt action, it has different input threshold levels for positive-going (V_{T+}) and negative-going (V_{T-}) signals.

To ensure the high-impedance state during power up or power down, $\overline{OE}$ should be tied to V_{CC} through a pullup resistor; the minimum value of the resistor is determined by the current-sinking capability of the driver.

This device is fully specified for partial-power-down applications using I_{off}. The I_{off} circuitry disables the outputs, preventing damaging current backflow through the device when it is powered down.

NanoFree™ package technologies are a major breakthrough in IC packaging concepts, using the die as the package.

DCT PACKAGE (TOP VIEW)

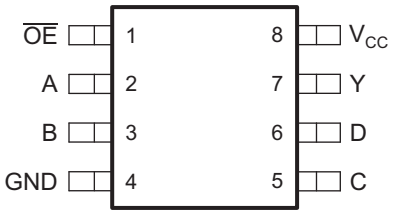

DCU PACKAGE (TOP VIEW)

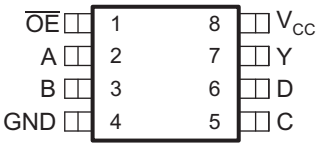

YZP PACKAGE (BOTTOM VIEW)

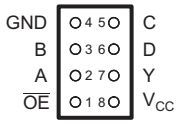

See mechanical drawings for dimensions.

Please be aware that an important notice concerning availability, standard warranty, and use in critical applications of Texas Instruments semiconductor products and disclaimers thereto appears at the end of this data sheet.

NanoFree is a trademark of Texas Instruments.

PRODUCTION DATA information is current as of publication date. Products conform to specifications per the terms of the Texas Instruments standard warranty. Production processing does not necessarily include testing of all parameters.

Copyright © 2004–2013, Texas Instruments Incorporated

These devices have limited built-in ESD protection. The leads should be shorted together or the device placed in conductive foam during storage or handling to prevent electrostatic damage to the MOS gates.

Function Table

INPUTS					OUTPUT
$\overline{OE}$	D	C	B	A	Y
L	L	L	L	L	L
L	L	L	L	H	H
L	L	L	H	L	L
L	L	L	H	H	H
L	L	H	L	L	L
L	L	H	L	H	L
L	L	H	H	L	H
L	L	H	H	H	H
L	H	L	L	L	H
L	H	L	L	H	L
L	H	L	H	L	H
L	H	L	H	H	L
L	H	H	L	L	H
L	H	H	L	H	H
L	H	H	H	L	L
L	H	H	H	H	L
H	H or L	H or L	H or L	H or L	Z

Logic Diagram (Positive Logic)

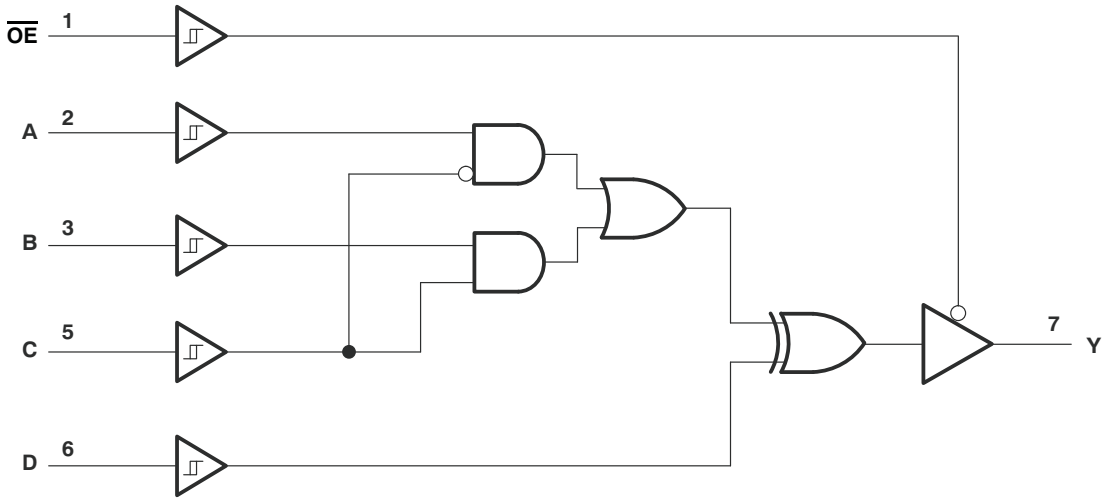

Copyright © 2004–2013, Texas Instruments Incorporated

Function Selection Table

PRIMARY FUNCTION	COMPLEMENTARY FUNCTION	PAGE
3-state buffer		3
3-state inverter		3
3-state 2-in-1 data selector MUX		4
3-state 2-in-1 data selector MUX, inverted out		4
3-state 2-input AND	3-state 2-input NOR, both inputs inverted	5
3-state 2-input AND, one input inverted	3-state 2-input NOR, one input inverted	5
3-state 2-input AND, both inputs inverted	3-state 2-input NOR	5
3-state 2-input NAND	3-state 2-input OR, both inputs inverted	6
3-state 2-input NAND, one input inverted	3-state 2-input OR, one input inverted	6
3-state 2-input NAND, both inputs inverted	3-state 2-input OR	6
3-state 2-input XOR		7
3-state 2-input XNOR	3-state 2-input XOR, one input inverted	7

3-State Buffer Functions Available

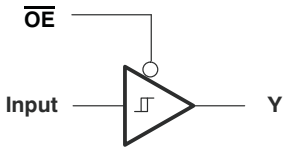

FUNCTION	$\overline{OE}$	A	B	C	D
3-state buffer	L	Input	H or L	L	L
		H or L	Input	H	L
		L	H	Input	L
		H	L	Input	H
		H	H or L	L	Input
		H or L	L	H	Input
		L	L	H or L	Input

3-State Inverter Functions Available

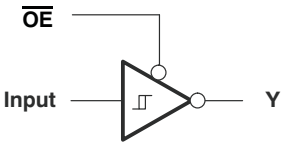

FUNCTION	$\overline{OE}$	A	B	C	D
3-state buffer	L	Input	H or L	L	H
		X	Input	H	H
		L	H	Input	H
		H	L	Input	L
		H	H or L	L	Input
		H or L	H	H	Input
		H	H	H or L	Input

3-State MUX Functions Available

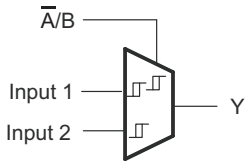

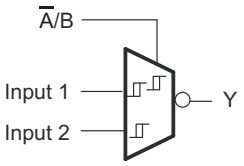

FUNCTION	$\overline{OE}$	A	B	C	D
3-state 2-to-1, data selector MUX	L	Input 1	Input 2	$\overline{\text{Input 1}}$ or Input 2	L
3-state 2-to-1, data selector MUX		Input 2	Input 1	$\overline{\text{Input 2}}$ or Input 1	L
3-state 2-to-1, data selector MUX, inverted out		Input 1	Input 2	$\overline{\text{Input 1}}$ or Input 2	H
3-state 2-to-1, data selector MUX, inverted out		Input 2	Input 1	$\overline{\text{Input 2}}$ or Input 1	H

Copyright © 2004–2013, Texas Instruments Incorporated

3-State AND/NOR/OR Functions Available

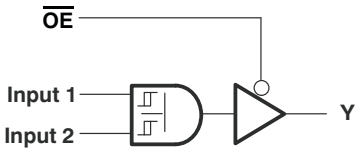

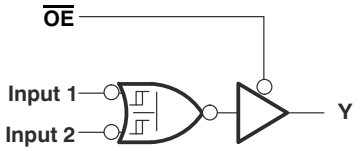

NO. OF INPUTS	AND/NAND FUNCTION	OR/NOR FUNCTION	$\overline{OE}$	A	B	C	D
2	3-state AND	3-state NOR	L	L	Input 1	Input 2	L
2	3-state AND	3-state NOR		L	Input 2	Input 1	L

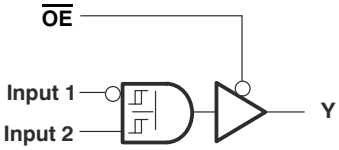

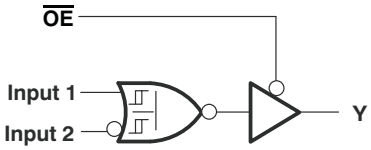

NO. OF INPUTS	AND/NAND FUNCTION	OR/NOR FUNCTION	$\overline{OE}$	A	B	C	D
2	3-state AND	3-state NOR	L	Input 2	L	Input 1	L
2	3-state AND	3-state NOR		H	Input 1	Input 2	H

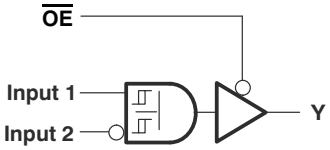

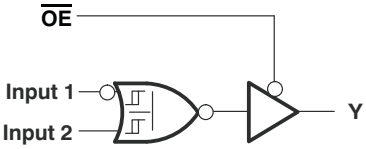

NO. OF INPUTS	AND/NAND FUNCTION	OR/NOR FUNCTION	$\overline{OE}$	A	B	C	D
2	3-state AND	3-state NOR	L	Input 1	L	Input 2	L
2	3-state AND	3-state NOR		H	Input 2	Input 1	H

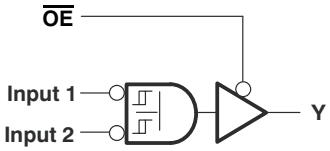

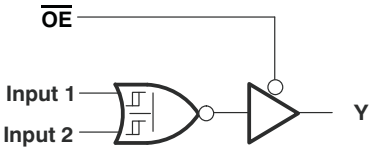

NO. OF INPUTS	AND/NAND FUNCTION	OR/NOR FUNCTION	$\overline{OE}$	A	B	C	D
2	3-state AND, both inverted inputs	3-state NOR	L	Input 1	H	Input 2	H
2	3-state AND, both inverted inputs	3-state NOR		Input 2	H	Input 1	H

3-State NAND/OR Functions Available

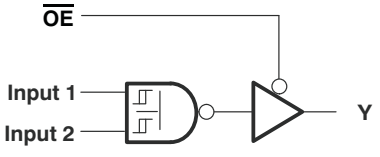

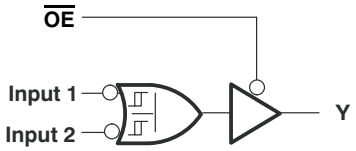

NO. OF INPUTS	AND/NAND FUNCTION	OR/NOR FUNCTION	$\overline{OE}$	A	B	C	D
2	3-state NAND	3-state OR	L	L	Input 1	Input 2	H
2	3-state NAND	3-state OR		L	Input 2	Input 1	H

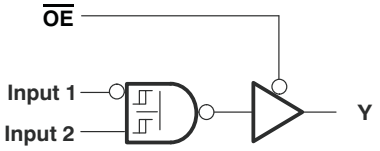

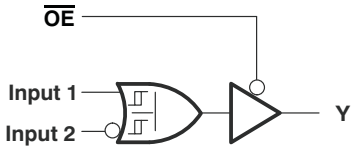

NO. OF INPUTS	AND/NAND FUNCTION	OR/NOR FUNCTION	$\overline{OE}$	A	B	C	D
2	3-state NAND	3-state OR	L	Input 2	L	Input 1	H
2	3-state NAND	3-state OR		H	Input 1	Input 2	L

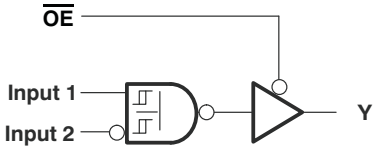

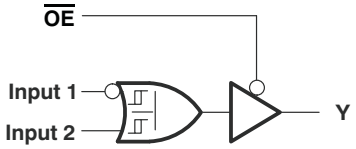

NO. OF INPUTS	AND/NAND FUNCTION	OR/NOR FUNCTION	$\overline{OE}$	A	B	C	D
2	3-state NAND	3-state OR	L	Input 1	L	Input 2	H
2	3-state NAND	3-state OR		H	Input 2	Input 1	L

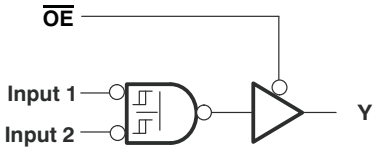

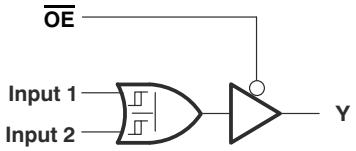

NO. OF INPUTS	AND/NAND FUNCTION	OR/NOR FUNCTION	$\overline{OE}$	A	B	C	D
2	3-state NAND	3-state OR	L	Input 1	H	Input 2	L
2	3-state NAND	3-state OR		Input 2	H	Input 1	L

Copyright © 2004–2013, Texas Instruments Incorporated

3-State XOR/XNOR Functions Available

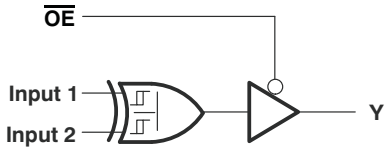

FUNCTION	$\overline{OE}$	A	B	C	D
3-state XOR	L	Input 1	H or L	L	Input 2
		Input 2	H or L	L	Input 1
		H or L	Input 1	H	Input 2
		H or L	Input 2	H	Input 1
		L	H	Input 1	Input 2
		L	H	Input 2	Input 1

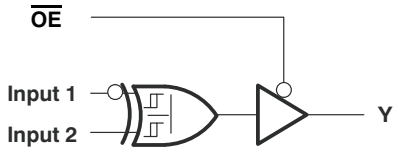

FUNCTION	$\overline{OE}$	A	B	C	D
3-state XOR	L	H	L	Input 1	Input 2

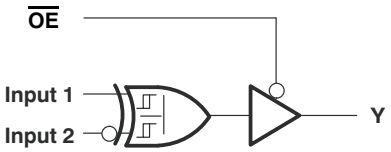

FUNCTION	$\overline{OE}$	A	B	C	D
3-state XOR	L	H	L	Input 1	Input 2

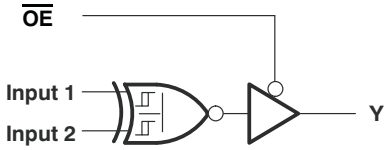

FUNCTION	$\overline{OE}$	A	B	C	D
3-state XNOR	L	H	L	Input 1	Input 2
3-state XNOR		H	L	Input 2	Input 1

Absolute Maximum Ratings[1]

over operating free-air temperature range (unless otherwise noted)

			MIN	MAX	UNIT
V_{CC}	Supply voltage range		–0.5	6.5	V
V_I	Input voltage range[2]		–0.5	6.5	V
V_O	Voltage range applied to any output in the high-impedance or power-off state[2]		–0.5	6.5	V
V_O	Voltage range applied to any output in the high or low state[2][3]		–0.5	V_{CC} + 0.5	V
I_{IK}	Input clamp current	$V_I < 0$		–50	mA
I_{OK}	Output clamp current	$V_O < 0$		–50	mA
I_O	Continuous output current			±50	mA
	Continuous current through V_{CC} or GND			±100	mA
θ_{JA}	Package thermal impedance[4]	DCT package		220	°C/W
		DCU package		227	
		YZP package		102	
T_{stg}	Storage temperature range		–65	150	°C

(1) Stresses beyond those listed under "absolute maximum ratings" may cause permanent damage to the device. These are stress ratings only, and functional operation of the device at these or any other conditions beyond those indicated under "recommended operating conditions" is not implied. Exposure to absolute-maximum-rated conditions for extended periods may affect device reliability.
(2) The input and output negative voltage ratings may be exceeded if the input and output current ratings are observed.
(3) The value of V_{CC} is provided in the recommended operating conditions table.
(4) The package thermal impedance is calculated in accordance with JESD 51-7.

Recommended Operating Conditions[1]

			MIN	MAX	UNIT
V_{CC}	Supply voltage	Operating	1.65	5.5	V
		Data retention only	1.5		
V_I	Input voltage		0	5.5	V
V_O	Output voltage		0	V_{CC}	V
I_{OH}	High-level output current	V_{CC} = 1.65 V		–4	mA
		V_{CC} = 2.3 V		–8	
		V_{CC} = 3 V		–16	
				–24	
		V_{CC} = 4.5 V		–32	
I_{OL}	Low-level output current	V_{CC} = 1.65 V		4	mA
		V_{CC} = 2.3 V		8	
		V_{CC} = 3 V		16	
				24	
		V_{CC} = 4.5 V		32	
Δt/Δv	Input transition rise or fall rate	V_{CC} = 1.8 V ± 0.15 V, 2.5 V ± 0.2 V		20	ns/V
		V_{CC} = 3.3 V ± 0.3 V		10	
		V_{CC} = 5 V ± 0.5 V		5	

(1) All unused inputs of the device must be held at V_{CC} or GND to ensure proper device operation. Refer to the TI application report, *Implications of Slow or Floating CMOS Inputs*, literature number SCBA004.

Copyright © 2004–2013, Texas Instruments Incorporated

Electrical Characteristics

over recommended operating free-air temperature range (unless otherwise noted)

PARAMETER	TEST CONDITIONS	V_{CC}	–40°C to 85°C			–40°C to 125°C			UNIT
			MIN	TYP(1)	MAX	MIN	TYP(1)	MAX	
V_{T+} Positive-going input threshold voltage		1.65 V	0.79		1.26	0.79		1.26	V
		2.3 V	1.11		1.66	1.11		1.66	
		3 V	1.5		1.97	1.5		1.97	
		4.5 V	2.16		2.84	2.16		2.84	
		5.5 V	2.61		3.43	2.61		3.43	
V_{T-} Negative-going input threshold voltage		1.65 V	0.39		0.72	0.39		0.72	V
		2.3 V	0.58		0.97	0.58		0.97	
		3 V	0.84		1.24	0.84		1.24	
		4.5 V	1.41		1.89	1.41		1.89	
		5.5 V	1.87		2.39	1.87		2.39	
ΔV_T Hysteresis ($V_{T+} - V_{T-}$)		1.65 V	0.37		0.72	0.37		0.72	V
		2.3 V	0.48		0.87	0.48		0.87	
		3 V	0.56		0.97	0.56		0.97	
		4.5 V	0.71		1.14	0.71		1.14	
		5.5 V	0.71		1.21	0.71		1.21	
V_{OH}	I_{OH} = –100 µA	1.65 V to 5.5 V	V_{CC} – 0.1			V_{CC} – 0.1			V
	I_{OH} = –4 mA	1.65 V	1.2			1.2			
	I_{OH} = –8 mA	2.3 V	1.9			1.9			
	I_{OH} = –16 mA	3 V	2.4			2.4			
	I_{OH} = –24 mA		2.3			2.3			
	I_{OH} = –32 mA	4.5 V	3.8			3.8			
V_{OL}	I_{OL} = 100 µA	1.65 V to 5.5 V			0.1			0.1	V
	I_{OL} = 4 mA	1.65 V			0.45			0.45	
	I_{OL} = 8 mA	2.3 V			0.3			0.3	
	I_{OL} = 16 mA	3 V			0.4			0.4	
	I_{OL} = 24 mA				0.55			0.55	
	I_{OL} = 32 mA	4.5 V			0.55			0.55	
I_I	V_I = 5.5 V or GND	0 V to 5.5 V			±5			±5	µA
I_{off}	V_I or V_O = 5.5 V	0 V			±10			±10	µA
I_{OZ}	V_O = V_{CC} or GND	1.65 V to 5.5 V			±10			±10	µA
I_{CC}	V_I = 5.5 V or GND, I_O = 0	1.65 V to 5.5 V			10			10	µA
ΔI_{CC}	One input at V_{CC} – 0.6 V, Other inputs at V_{CC} or GND	3 V to 5.5 V			500			500	µA
C_i	V_I = V_{CC} or GND	3.3 V		3.5			3.5		pF
C_o	V_O = V_{CC} or GND	3.3 V		6			6		pF

(1) T_A = 25°C

Switching Characteristics

over recommended operating free-air temperature range, C_L = 15 pF (unless otherwise noted) (see Figure 1)

PARAMETER	FROM (INPUT)	TO (OUTPUT)	SN74LVC1G99 –40°C to 85°C								UNIT
			V_{CC} = 1.8 V ± 0.15 V		V_{CC} = 2.5 V ± 0.2 V		V_{CC} = 3.3 V ± 0.3 V		V_{CC} = 5 V ± 0.5 V		
			MIN	MAX	MIN	MAX	MIN	MAX	MIN	MAX	
t_{pd}	A	Y	4.5	30.1	2.5	11.3	1.8	7.5	1.3	4.8	ns
	B		4.4	28.3	2.4	10.8	1.8	7.2	1.3	4.7	
	C		4.4	29.1	2.4	11.7	1.9	7.6	1.3	5	
	D		4.3	25.1	2.4	10.2	1.7	6.7	1.3	4.5	
t_{en}	$\overline{OE}$	Y	3.4	24.7	2.1	10	1.3	5.8	1	3.8	ns
t_{dis}	$\overline{OE}$	Y	4	15.5	2.7	7.5	3.5	7	2	5.5	ns

Switching Characteristics

over recommended operating free-air temperature range, C_L = 30 pF or 50 pF (unless otherwise noted) (see Figure 2)

PARAMETER	FROM (INPUT)	TO (OUTPUT)	SN74LVC1G99 –40°C to 85°C								UNIT
			V_{CC} = 1.8 V ± 0.15 V		V_{CC} = 2.5 V ± 0.2 V		V_{CC} = 3.3 V ± 0.3 V		V_{CC} = 5 V ± 0.5 V		
			MIN	MAX	MIN	MAX	MIN	MAX	MIN	MAX	
t_{pd}	A	Y	4.6	30.8	2.6	11.7	2.4	8.4	1.8	5.5	ns
	B		4.6	28.9	2.6	11.3	2.3	8.2	1.8	5.4	
	C		4.4	29.8	2.5	12.3	2.5	8.6	1.8	5.7	
	D		4.3	25.7	2.5	10.7	2.4	7.6	1.6	5.2	
t_{en}	$\overline{OE}$	Y	4.2	25.2	2.4	11.3	2	7	1.7	4.7	ns
t_{dis}	$\overline{OE}$	Y	3.7	15	2	5.8	2.1	5.6	1	4.5	ns

Switching Characteristics

over recommended operating free-air temperature range (unless otherwise noted) (see Figure 2)

PARAMETER	FROM (INPUT)	TO (OUTPUT)	SN74LVC1G99 –40°C to 125°C								UNIT
			V_{CC} = 1.8 V ± 0.15 V		V_{CC} = 2.5 V ± 0.2 V		V_{CC} = 3.3 V ± 0.3 V		V_{CC} = 5 V ± 0.5 V		
			MIN	MAX	MIN	MAX	MIN	MAX	MIN	MAX	
t_{pd}	A	Y	4.6	32.8	2.6	13.7	2.4	10.4	1.8	6.9	ns
	B		4.6	30.9	2.6	13.3	2.3	10.2	1.8	6.8	
	C		4.4	31.8	2.4	14.3	2.5	10.6	1.8	7.2	
	D		4.3	27.7	2.5	12.7	2.4	9.5	1.6	6.5	
t_{en}	$\overline{OE}$	Y	4.2	27.2	2.4	13.3	2.0	9.0	1.7	6.0	ns
t_{dis}	$\overline{OE}$	Y	3.7	17.0	2.0	7.3	2.1	7.4	1.0	5.6	ns

Operating Characteristics

T_A = 25°C

PARAMETER		TEST CONDITIONS	V_{CC} = 1.8 V	V_{CC} = 2.5 V	V_{CC} = 3.3 V	V_{CC} = 5 V	UNIT
			TYP	TYP	TYP	TYP	
C_{pd}	Power dissipation capacitance	f = 10 MHz	19	20	22	27	pF

Copyright © 2004–2013, Texas Instruments Incorporated

Parameter Measurement Information

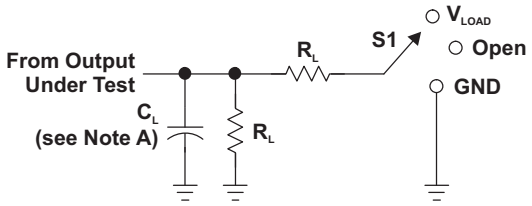

LOAD CIRCUIT

TEST	S1
t_{PLH}/t_{PHL}	Open
t_{PLZ}/t_{PZL}	V_{LOAD}
t_{PHZ}/t_{PZH}	GND

V_{CC}	INPUTS		V_M	V_{LOAD}	C_L	R_L	V_Δ
	V_I	t_r/t_f					
1.8 V ± 0.15 V	V_{CC}	≤2 ns	$V_{CC}/2$	2 × V_{CC}	15 pF	1 MΩ	0.15 V
2.5 V ± 0.2 V	V_{CC}	≤2 ns	$V_{CC}/2$	2 × V_{CC}	15 pF	1 MΩ	0.15 V
3.3 V ± 0.3 V	3 V	≤2.5 ns	1.5 V	6 V	15 pF	1 MΩ	0.3 V
5 V ± 0.5 V	V_{CC}	≤2.5 ns	$V_{CC}/2$	2 × V_{CC}	15 pF	1 MΩ	0.3 V

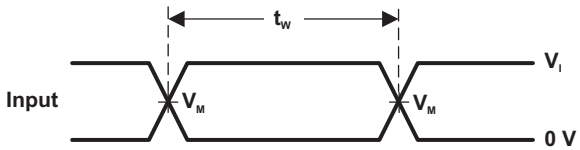

VOLTAGE WAVEFORMS
PULSE DURATION

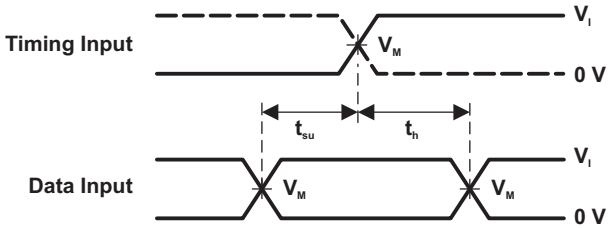

VOLTAGE WAVEFORMS
SETUP AND HOLD TIMES

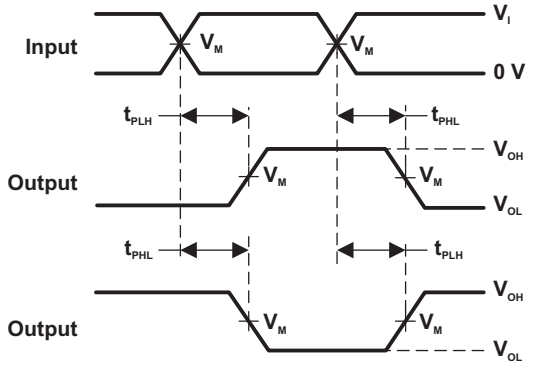

VOLTAGE WAVEFORMS
PROPAGATION DELAY TIMES
INVERTING AND NONINVERTING OUTPUTS

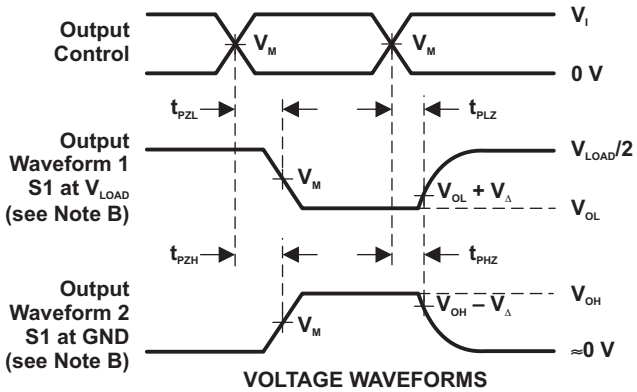

VOLTAGE WAVEFORMS
ENABLE AND DISABLE TIMES
LOW- AND HIGH-LEVEL ENABLING

NOTES:
A. C_L includes probe and jig capacitance.
B. Waveform 1 is for an output with internal conditions such that the output is low, except when disabled by the output control. Waveform 2 is for an output with internal conditions such that the output is high, except when disabled by the output control.
C. All input pulses are supplied by generators having the following characteristics: PRR ≤ 10 MHz, Z_O = 50 Ω.
D. The outputs are measured one at a time, with one transition per measurement.
E. t_{PLZ} and t_{PHZ} are the same as t_{dis}.
F. t_{PZL} and t_{PZH} are the same as t_{en}.
G. t_{PLH} and t_{PHL} are the same as t_{pd}.
H. All parameters and waveforms are not applicable to all devices.

Figure 1. Load Circuit and Voltage Waveforms

Parameter Measurement Information (continued)

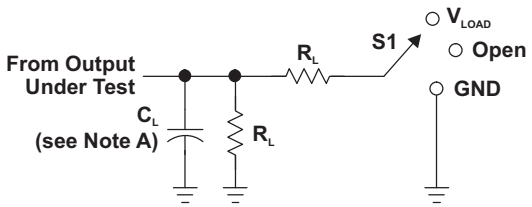

LOAD CIRCUIT

TEST	S1
t_{PLH}/t_{PHL}	Open
t_{PLZ}/t_{PZL}	V_{LOAD}
t_{PHZ}/t_{PZH}	GND

V_{CC}	INPUTS		V_M	V_{LOAD}	C_L	R_L	V_Δ
	V_I	t_r/t_f					
1.8 V ± 0.15 V	V_{CC}	≤2 ns	$V_{CC}/2$	2 × V_{CC}	30 pF	1 kΩ	0.15 V
2.5 V ± 0.2 V	V_{CC}	≤2 ns	$V_{CC}/2$	2 × V_{CC}	30 pF	500 Ω	0.15 V
3.3 V ± 0.3 V	3 V	≤2.5 ns	1.5 V	6 V	50 pF	500 Ω	0.3 V
5 V ± 0.5 V	V_{CC}	≤2.5 ns	$V_{CC}/2$	2 × V_{CC}	50 pF	500 Ω	0.3 V

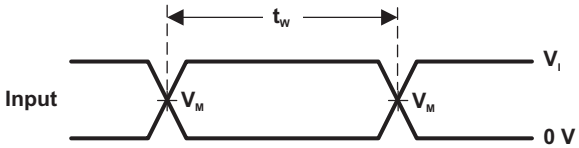

VOLTAGE WAVEFORMS
PULSE DURATION

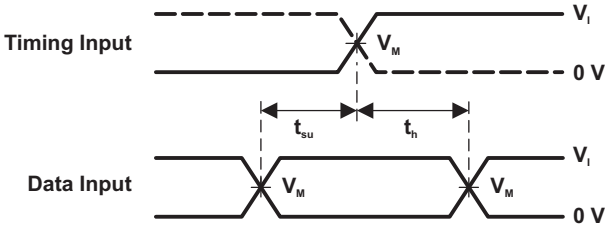

VOLTAGE WAVEFORMS
SETUP AND HOLD TIMES

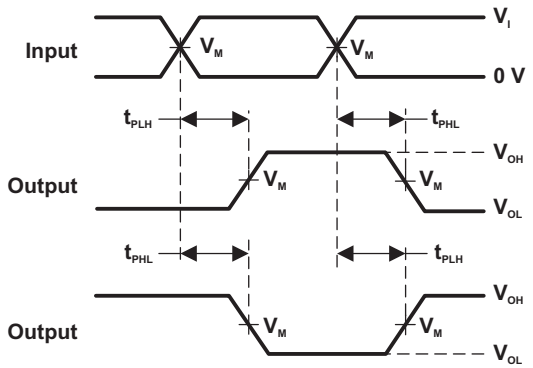

VOLTAGE WAVEFORMS
PROPAGATION DELAY TIMES
INVERTING AND NONINVERTING OUTPUTS

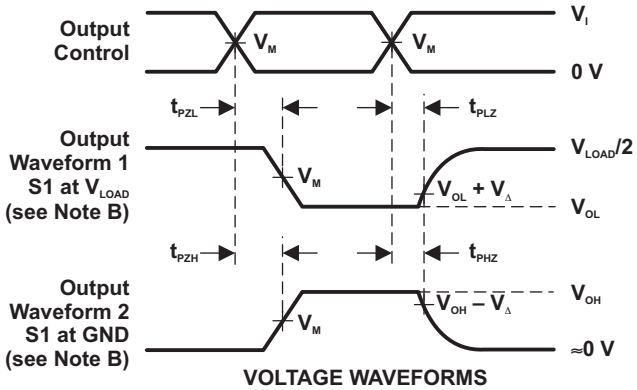

VOLTAGE WAVEFORMS
ENABLE AND DISABLE TIMES
LOW- AND HIGH-LEVEL ENABLING

NOTES: A. C_L includes probe and jig capacitance.
B. Waveform 1 is for an output with internal conditions such that the output is low, except when disabled by the output control. Waveform 2 is for an output with internal conditions such that the output is high, except when disabled by the output control.
C. All input pulses are supplied by generators having the following characteristics: PRR ≤ 10 MHz, Z_O = 50 Ω.
D. The outputs are measured one at a time, with one transition per measurement.
E. t_{PLZ} and t_{PHZ} are the same as t_{dis}.
F. t_{PZL} and t_{PZH} are the same as t_{en}.
G. t_{PLH} and t_{PHL} are the same as t_{pd}.
H. All parameters and waveforms are not applicable to all devices.

Figure 2. Load Circuit and Voltage Waveforms

Copyright © 2004–2013, Texas Instruments Incorporated

REVISION HISTORY

Changes from Revision E (October 2007) to Revision F	Page
• Changed document template from TIMS format to DocZone format.	1
• Changed 3-State Mux graphic to fix labeling error.	4

Changes from Revision F (April 2011) to Revision G	Page
• Updated document to new TI data sheet format.	1
• Updated Features.	1
• Added ESD warning.	2
• Updated operating temperature range.	8

Copyright © 2004–2013, Texas Instruments Incorporated

PACKAGING INFORMATION

Orderable Device	Status (1)	Package Type	Package Drawing	Pins	Package Qty	Eco Plan (2)	Lead/Ball Finish (6)	MSL Peak Temp (3)	Op Temp (°C)	Device Marking (4/5)	Samples
SN74LVC1G99DCTR	ACTIVE	SM8	DCT	8	3000	Green (RoHS & no Sb/Br)	NIPDAU	Level-1-260C-UNLIM	-40 to 125	C99 (R, Z)	Samples
SN74LVC1G99DCTRG4	ACTIVE	SM8	DCT	8	3000	Green (RoHS & no Sb/Br)	NIPDAU	Level-1-260C-UNLIM	-40 to 125	C99 (R, Z)	Samples
SN74LVC1G99DCTT	ACTIVE	SM8	DCT	8	250	Green (RoHS & no Sb/Br)	NIPDAU	Level-1-260C-UNLIM	-40 to 125	C99 (R, Z)	Samples
SN74LVC1G99DCUR	ACTIVE	VSSOP	DCU	8	3000	Green (RoHS & no Sb/Br)	NIPDAU | SN	Level-1-260C-UNLIM	-40 to 125	(C99Q, C99R)	Samples
SN74LVC1G99DCURG4	ACTIVE	VSSOP	DCU	8	3000	Green (RoHS & no Sb/Br)	NIPDAU	Level-1-260C-UNLIM	-40 to 125	C99R	Samples
SN74LVC1G99DCUT	ACTIVE	VSSOP	DCU	8	250	Green (RoHS & no Sb/Br)	NIPDAU | SN	Level-1-260C-UNLIM	-40 to 125	(C99Q, C99R)	Samples
SN74LVC1G99YZPR	ACTIVE	DSBGA	YZP	8	3000	Green (RoHS & no Sb/Br)	SNAGCU	Level-1-260C-UNLIM	-40 to 125	DEN	Samples

(1) The marketing status values are defined as follows:
ACTIVE: Product device recommended for new designs.
LIFEBUY: TI has announced that the device will be discontinued, and a lifetime-buy period is in effect.
NRND: Not recommended for new designs. Device is in production to support existing customers, but TI does not recommend using this part in a new design.
PREVIEW: Device has been announced but is not in production. Samples may or may not be available.
OBSOLETE: TI has discontinued the production of the device.

(2) **RoHS:** TI defines "RoHS" to mean semiconductor products that are compliant with the current EU RoHS requirements for all 10 RoHS substances, including the requirement that RoHS substance do not exceed 0.1% by weight in homogeneous materials. Where designed to be soldered at high temperatures, "RoHS" products are suitable for use in specified lead-free processes. TI may reference these types of products as "Pb-Free".
RoHS Exempt: TI defines "RoHS Exempt" to mean products that contain lead but are compliant with EU RoHS pursuant to a specific EU RoHS exemption.
Green: TI defines "Green" to mean the content of Chlorine (Cl) and Bromine (Br) based flame retardants meet JS709B low halogen requirements of <=1000ppm threshold. Antimony trioxide based flame retardants must also meet the <=1000ppm threshold requirement.

(3) MSL, Peak Temp. - The Moisture Sensitivity Level rating according to the JEDEC industry standard classifications, and peak solder temperature.

(4) There may be additional marking, which relates to the logo, the lot trace code information, or the environmental category on the device.

(5) Multiple Device Markings will be inside parentheses. Only one Device Marking contained in parentheses and separated by a "~" will appear on a device. If a line is indented then it is a continuation of the previous line and the two combined represent the entire Device Marking for that device.

(6) Lead/Ball Finish - Orderable Devices may have multiple material finish options. Finish options are separated by a vertical ruled line. Lead/Ball Finish values may wrap to two lines if the finish value exceeds the maximum column width.

Important Information and Disclaimer: The information provided on this page represents TI's knowledge and belief as of the date that it is provided. TI bases its knowledge and belief on information provided by third parties, and makes no representation or warranty as to the accuracy of such information. Efforts are underway to better integrate information from third parties. TI has taken and continues to take reasonable steps to provide representative and accurate information but may not have conducted destructive testing or chemical analysis on incoming materials and chemicals. TI and TI suppliers consider certain information to be proprietary, and thus CAS numbers and other limited information may not be available for release.

In no event shall TI's liability arising out of such information exceed the total purchase price of the TI part(s) at issue in this document sold by TI to Customer on an annual basis.

OTHER QUALIFIED VERSIONS OF SN74LVC1G99 :

- Automotive: SN74LVC1G99-Q1

NOTE: Qualified Version Definitions:

- Automotive - Q100 devices qualified for high-reliability automotive applications targeting zero defects

TAPE AND REEL INFORMATION

REEL DIMENSIONS

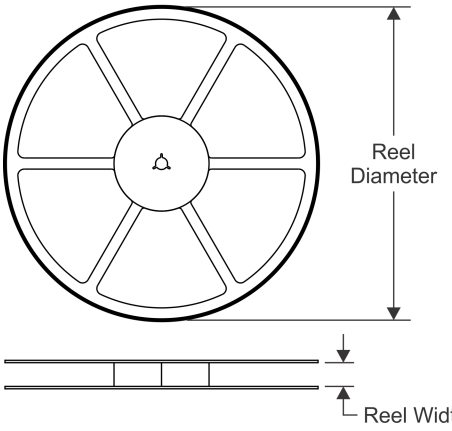

TAPE DIMENSIONS

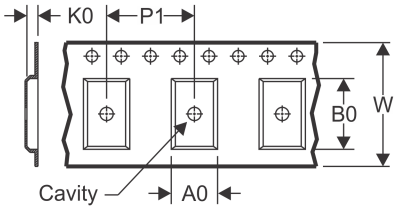

A0	Dimension designed to accommodate the component width
B0	Dimension designed to accommodate the component length
K0	Dimension designed to accommodate the component thickness
W	Overall width of the carrier tape
P1	Pitch between successive cavity centers

QUADRANT ASSIGNMENTS FOR PIN 1 ORIENTATION IN TAPE

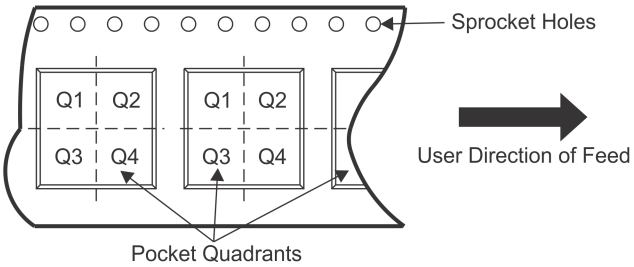

*All dimensions are nominal

Device	Package Type	Package Drawing	Pins	SPQ	Reel Diameter (mm)	Reel Width W1 (mm)	A0 (mm)	B0 (mm)	K0 (mm)	P1 (mm)	W (mm)	Pin1 Quadrant
SN74LVC1G99DCTR	SM8	DCT	8	3000	180.0	13.0	3.35	4.5	1.55	4.0	12.0	Q3
SN74LVC1G99DCTT	SM8	DCT	8	250	180.0	13.0	3.35	4.5	1.55	4.0	12.0	Q3
SN74LVC1G99DCUR	VSSOP	DCU	8	3000	180.0	8.4	2.25	3.35	1.05	4.0	8.0	Q3
SN74LVC1G99DCURG4	VSSOP	DCU	8	3000	180.0	8.4	2.25	3.35	1.05	4.0	8.0	Q3
SN74LVC1G99YZPR	DSBGA	YZP	8	3000	178.0	9.2	1.02	2.02	0.63	4.0	8.0	Q1

TAPE AND REEL BOX DIMENSIONS

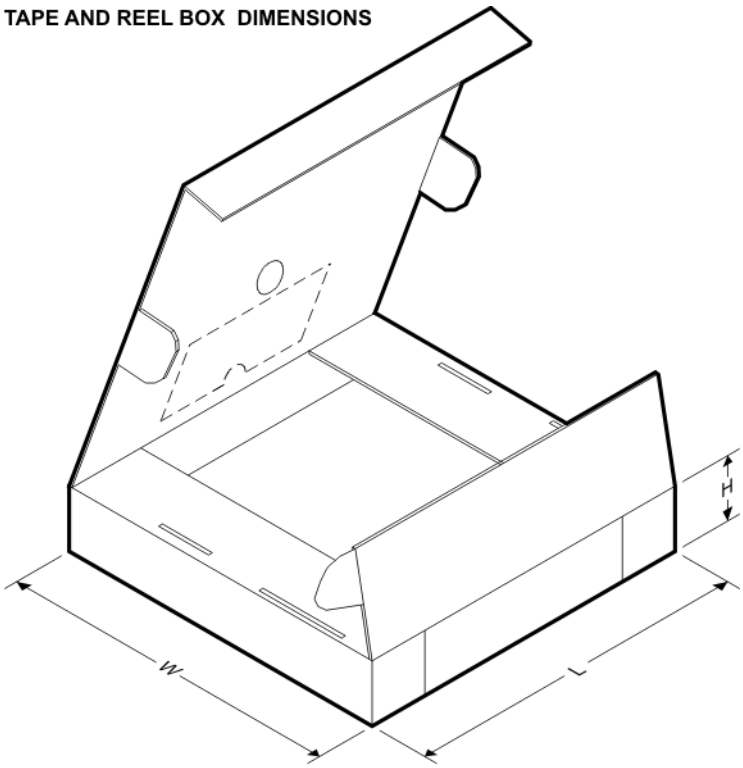

*All dimensions are nominal

Device	Package Type	Package Drawing	Pins	SPQ	Length (mm)	Width (mm)	Height (mm)
SN74LVC1G99DCTR	SM8	DCT	8	3000	182.0	182.0	20.0
SN74LVC1G99DCTT	SM8	DCT	8	250	182.0	182.0	20.0
SN74LVC1G99DCUR	VSSOP	DCU	8	3000	202.0	201.0	28.0
SN74LVC1G99DCURG4	VSSOP	DCU	8	3000	183.0	183.0	20.0
SN74LVC1G99YZPR	DSBGA	YZP	8	3000	220.0	220.0	35.0

DCT (R-PDSO-G8) **PLASTIC SMALL-OUTLINE PACKAGE**

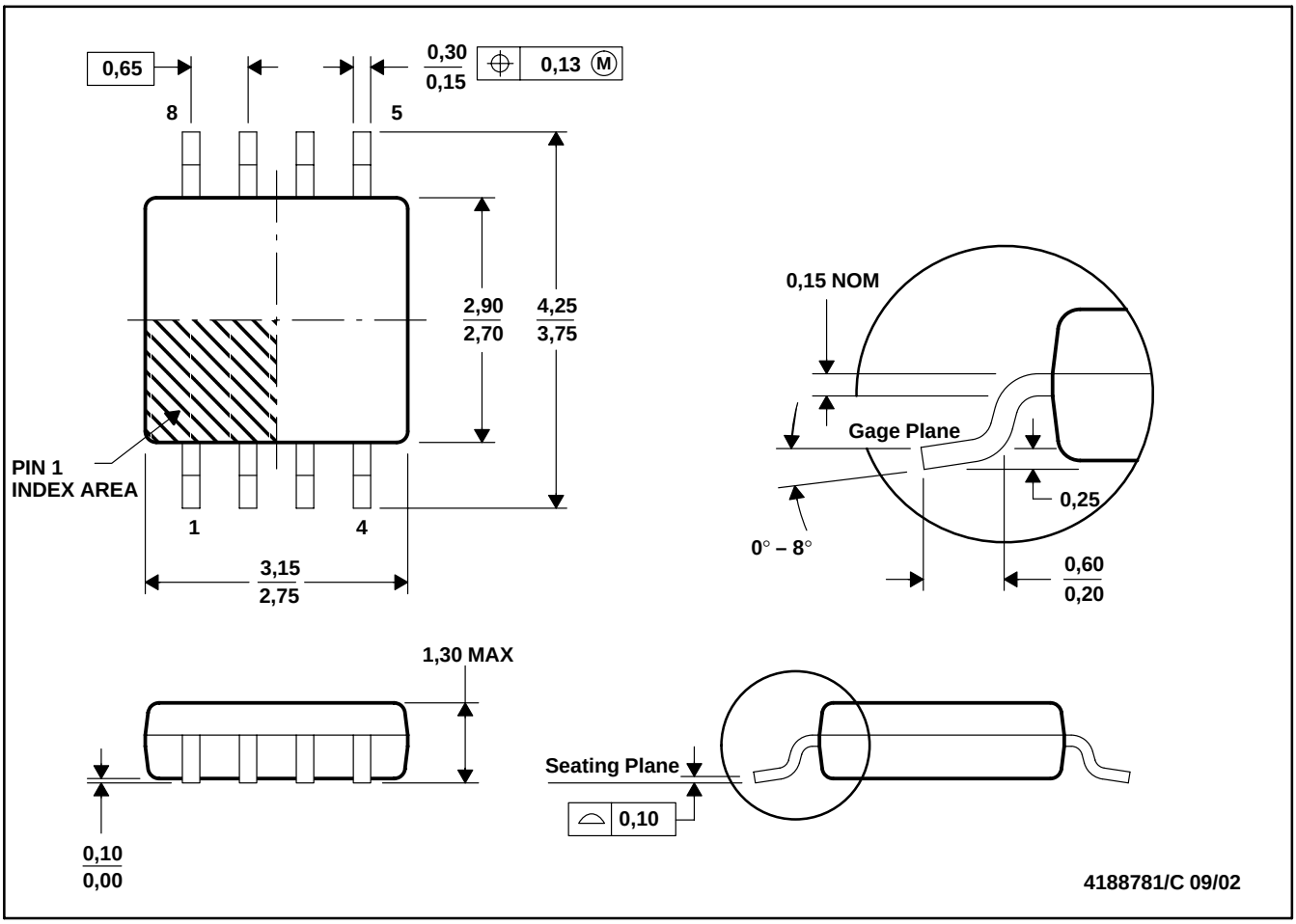

NOTES: A. All linear dimensions are in millimeters.
B. This drawing is subject to change without notice.
C. Body dimensions do not include mold flash or protrusion
D. Falls within JEDEC MO-187 variation DA.

DCT (R-PDSO-G8) PLASTIC SMALL OUTLINE

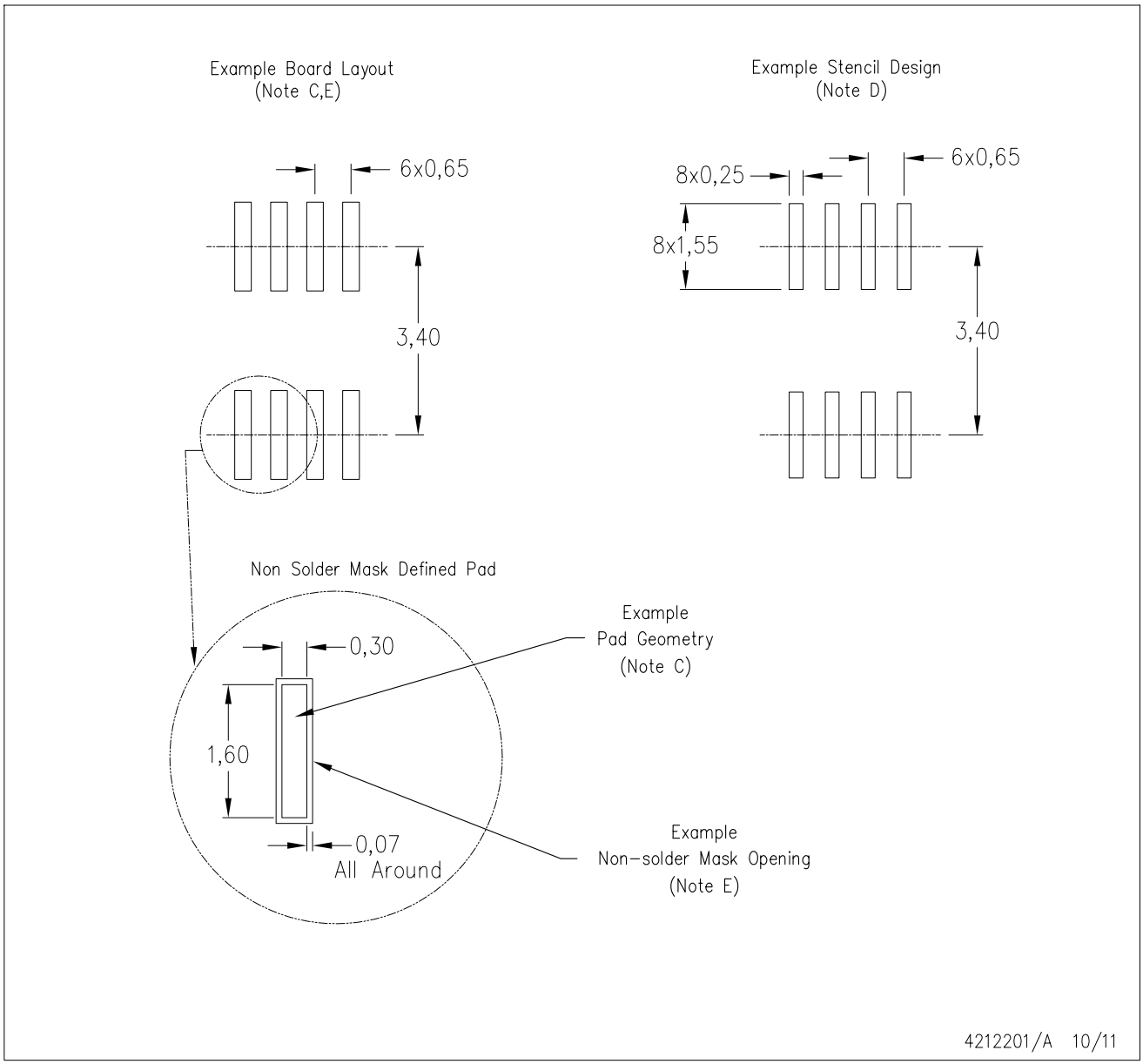

NOTES:
A. All linear dimensions are in millimeters.
B. This drawing is subject to change without notice.
C. Publication IPC-7351 is recommended for alternate designs.
D. Laser cutting apertures with trapezoidal walls and also rounding corners will offer better paste release. Customers should contact their board assembly site for stencil design recommendations. Refer to IPC-7525.
E. Customers should contact their board fabrication site for solder mask tolerances between and around signal pads.

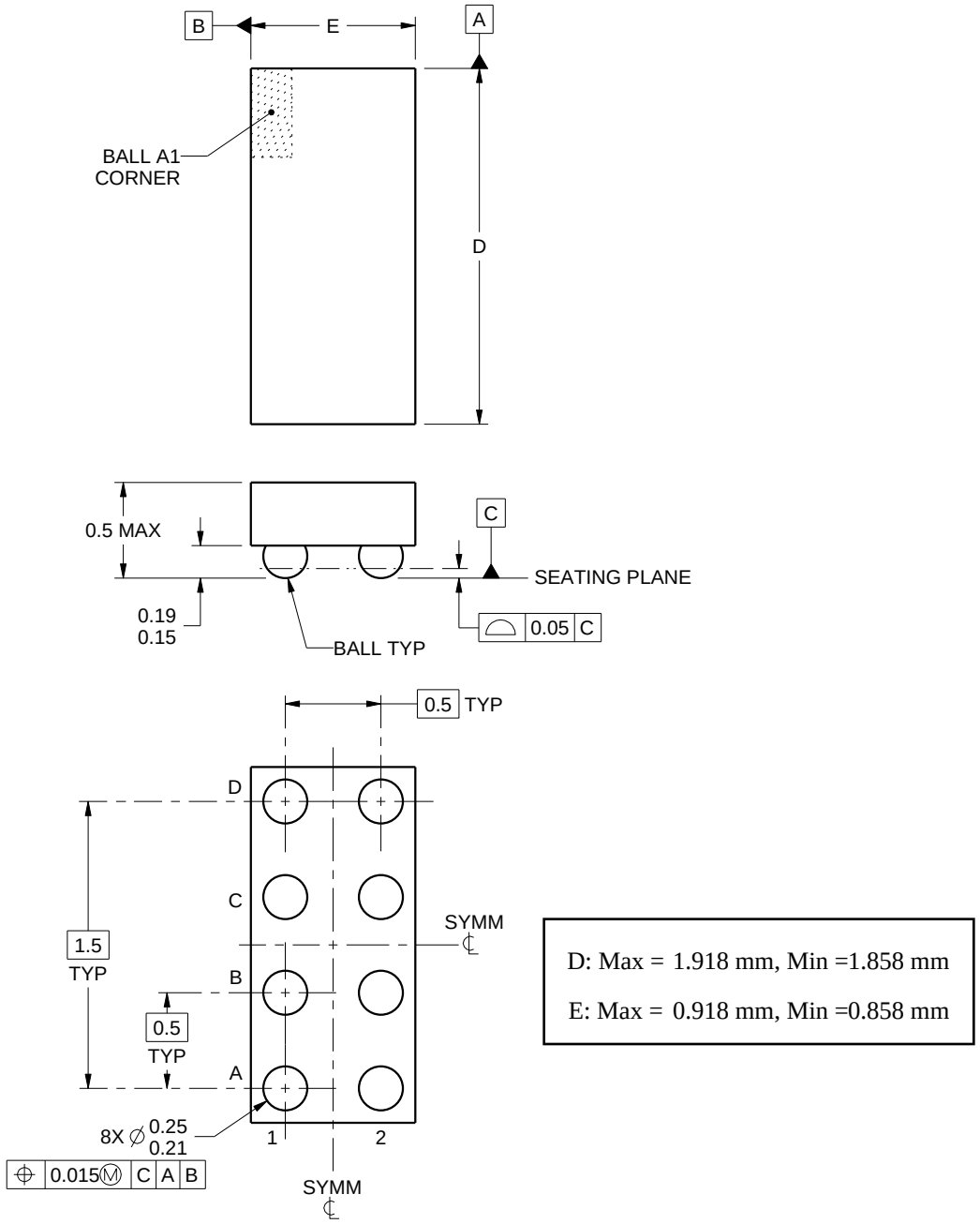

NOTES:

1. All linear dimensions are in millimeters. Any dimensions in parenthesis are for reference only. Dimensioning and tolerancing per ASME Y14.5M.
2. This drawing is subject to change without notice.

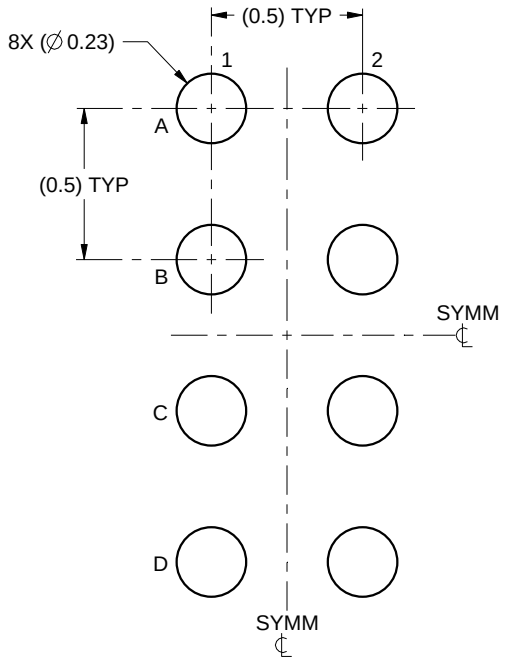

LAND PATTERN EXAMPLE
SCALE:40X

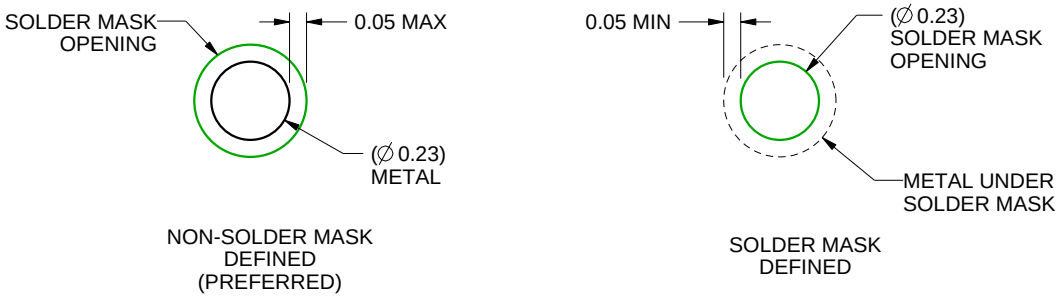

SOLDER MASK DETAILS
NOT TO SCALE

4223082/A 07/2016

NOTES: (continued)

3. Final dimensions may vary due to manufacturing tolerance considerations and also routing constraints.
   For more information, see Texas Instruments literature number SNVA009 (www.ti.com/lit/snva009).

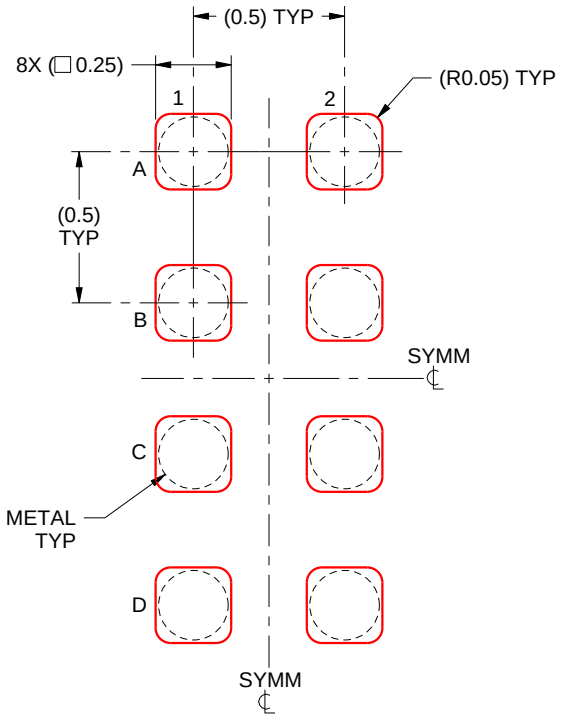

SOLDER PASTE EXAMPLE
BASED ON 0.1 mm THICK STENCIL
SCALE:40X

4223082/A 07/2016

NOTES: (continued)

4. Laser cutting apertures with trapezoidal walls and rounded corners may offer better paste release.

DCU (R–PDSO–G8) PLASTIC SMALL–OUTLINE PACKAGE (DIE DOWN)

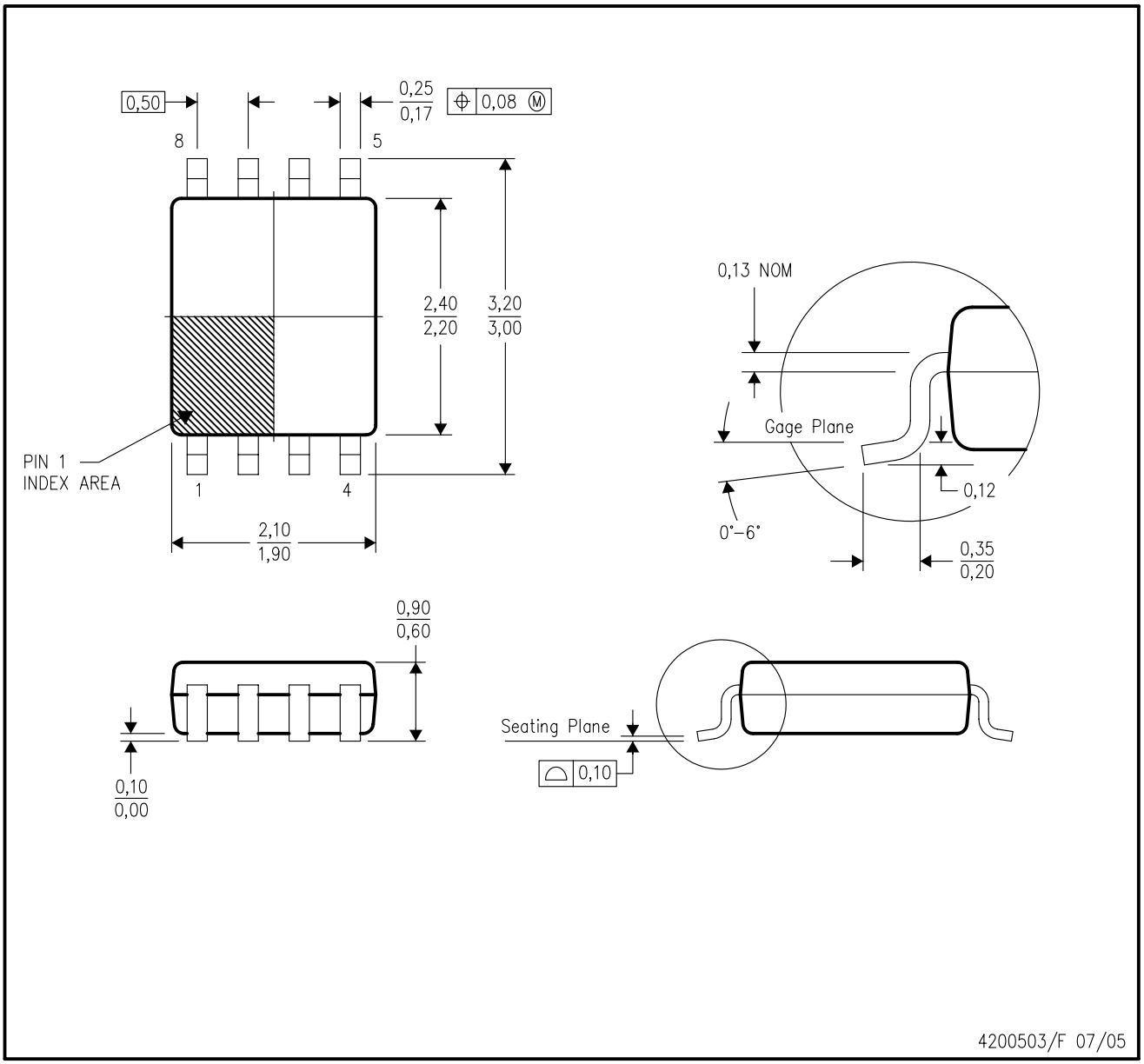

NOTES:
A. All linear dimensions are in millimeters.
B. This drawing is subject to change without notice.
C. Body dimensions do not include mold flash or protrusion. Mold flash and protrusion shall not exceed 0.15 per side.
D. Falls within JEDEC MO–187 variation CA.

DCU (S–PDSO–G8) PLASTIC SMALL OUTLINE PACKAGE (DIE DOWN)

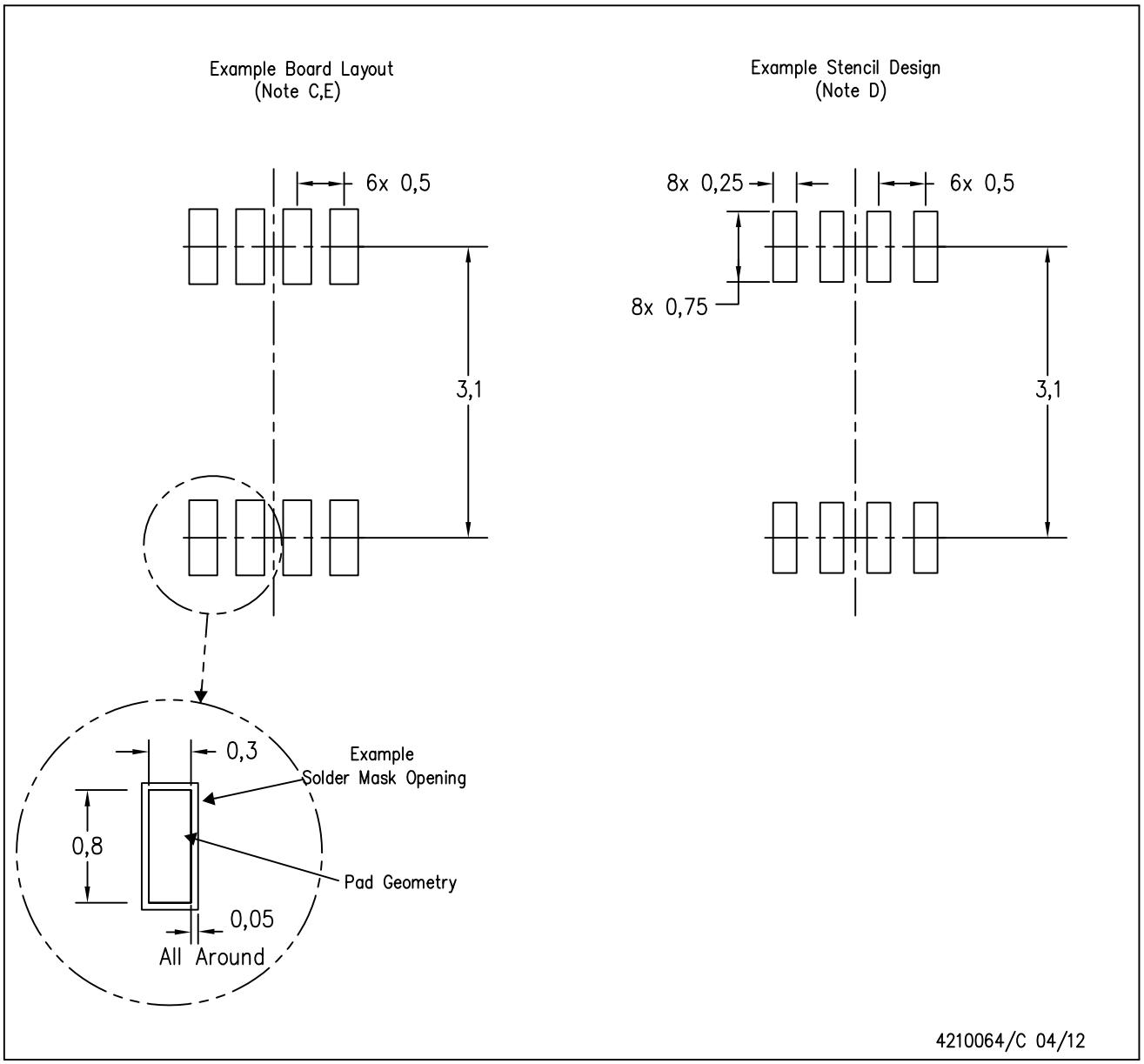

NOTES:
A. All linear dimensions are in millimeters.
B. This drawing is subject to change without notice.
C. Publication IPC–7351 is recommended for alternate designs.
D. Laser cutting apertures with trapezoidal walls and also rounding corners will offer better paste release. Customers should contact their board assembly site for stencil design recommendations. Refer to IPC–7525 for other stencil recommendations.
E. Customers should contact their board fabrication site for solder mask tolerances between and around signal pads.

IMPORTANT NOTICE AND DISCLAIMER

TI PROVIDES TECHNICAL AND RELIABILITY DATA (INCLUDING DATASHEETS), DESIGN RESOURCES (INCLUDING REFERENCE DESIGNS), APPLICATION OR OTHER DESIGN ADVICE, WEB TOOLS, SAFETY INFORMATION, AND OTHER RESOURCES “AS IS” AND WITH ALL FAULTS, AND DISCLAIMS ALL WARRANTIES, EXPRESS AND IMPLIED, INCLUDING WITHOUT LIMITATION ANY IMPLIED WARRANTIES OF MERCHANTABILITY, FITNESS FOR A PARTICULAR PURPOSE OR NON-INFRINGEMENT OF THIRD PARTY INTELLECTUAL PROPERTY RIGHTS.

These resources are intended for skilled developers designing with TI products. You are solely responsible for (1) selecting the appropriate TI products for your application, (2) designing, validating and testing your application, and (3) ensuring your application meets applicable standards, and any other safety, security, or other requirements. These resources are subject to change without notice. TI grants you permission to use these resources only for development of an application that uses the TI products described in the resource. Other reproduction and display of these resources is prohibited. No license is granted to any other TI intellectual property right or to any third party intellectual property right. TI disclaims responsibility for, and you will fully indemnify TI and its representatives against, any claims, damages, costs, losses, and liabilities arising out of your use of these resources.

TI’s products are provided subject to TI’s Terms of Sale (www.ti.com/legal/termsofsale.html) or other applicable terms available either on ti.com or provided in conjunction with such TI products. TI’s provision of these resources does not expand or otherwise alter TI’s applicable warranties or warranty disclaimers for TI products.

Mailing Address: Texas Instruments, Post Office Box 655303, Dallas, Texas 75265
Copyright © 2020, Texas Instruments Incorporated