- 3-State Outputs Drive Bus Lines Directly
- Encodes 8 Data Lines to 3-Line Binary (Octal)
- Applications Include:
  - N-Bit Encoding
  - Code Converters and Generators
- Typical Data Delay . . . 15 ns
- Typical Power Dissipation . . . 60 mW

description

These TTL encoders feature priority decoding of the inputs to ensure that only the highest-order data line is encoded. The 'LS348 circuits encode eight data lines to three-line (4-2-1) binary (octal). Cascading circuitry (enable input EI and enable output EO) has been provided to allow octal expansion. Outputs A0, A1, and A2 are implemented in three-state logic for easy expansion up to 64 lines without the need for external circuitry. See Typical Application Data.

FUNCTION TABLE

INPUTS									OUTPUTS				
EI	0	1	2	3	4	5	6	7	A2	A1	A0	GS	EO
H	X	X	X	X	X	X	X	X	Z	Z	Z	H	H
L	H	H	H	H	H	H	H	H	Z	Z	Z	H	L
L	X	X	X	X	X	X	X	L	L	L	L	L	H
L	X	X	X	X	X	X	L	H	L	L	H	L	H
L	X	X	X	X	X	L	H	H	L	H	L	L	H
L	X	X	X	X	L	H	H	H	L	H	H	L	H
L	X	X	X	L	H	H	H	H	H	L	L	L	H
L	X	X	L	H	H	H	H	H	H	L	H	L	H
L	X	L	H	H	H	H	H	H	H	H	L	L	H
L	L	H	H	H	H	H	H	H	H	H	H	L	H

H = high logic level, L = low logic level, X = irrelevant
Z = high-impedance state

SN54LS348 . . . J OR W PACKAGE
SN74LS348 . . . D OR N PACKAGE
(TOP VIEW)

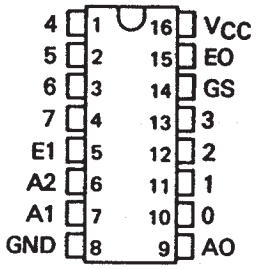

SN54LS348 . . . FK PACKAGE
(TOP VIEW)

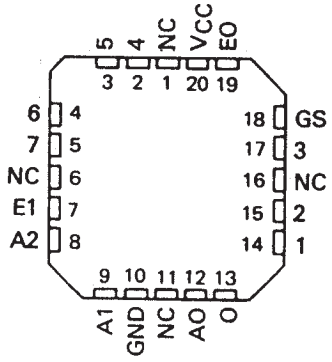

NC – No internal connection

logic symbol†

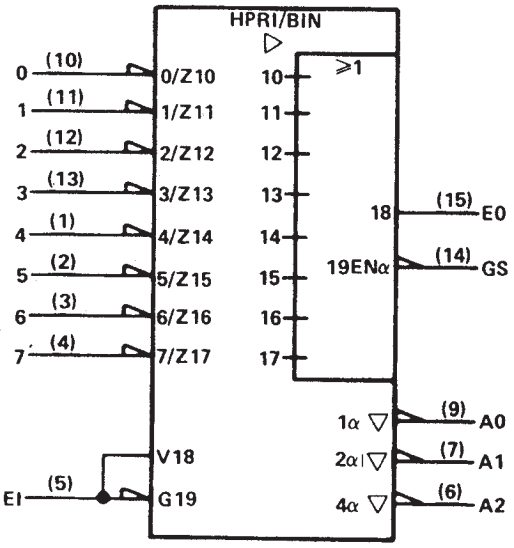

†This symbol is in accordance with ANSI/IEEE Std. 91-1984 and IEC Publication 617-12.
Pin numbers shown are for D, J, N, and W packages.

PRODUCTION DATA information is current as of publication date. Products conform to specifications per the terms of Texas Instruments standard warranty. Production processing does not necessarily include testing of all parameters.

Copyright © 1988, Texas Instruments Incorporated

logic diagram (positive logic)

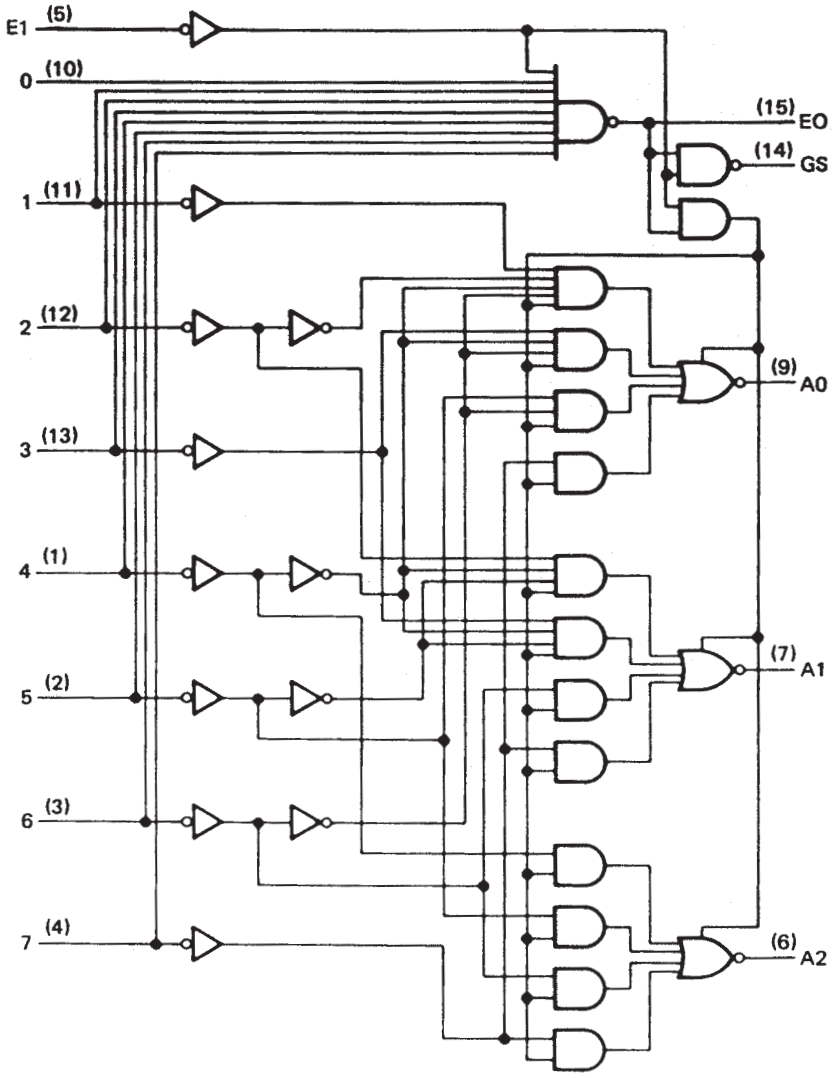

Pin numbers shown are for D, J, N, and W packages.

schematic of inputs and outputs

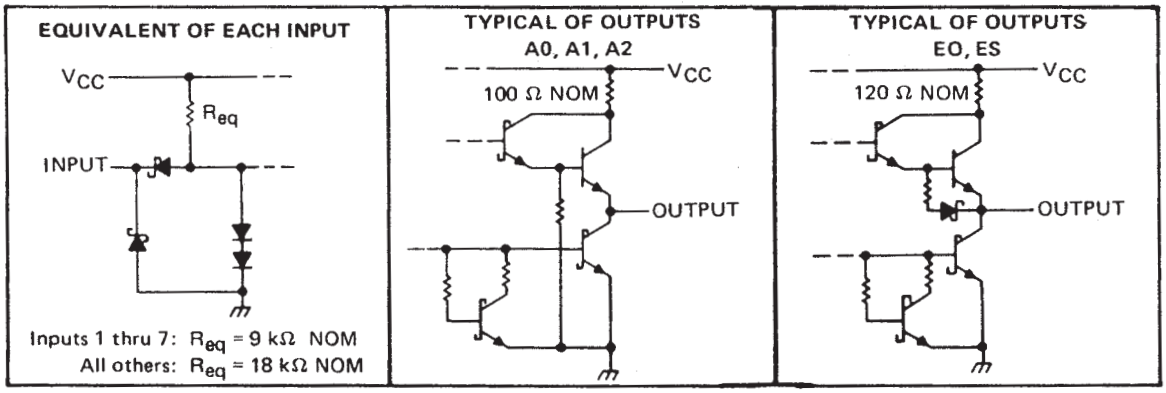

absolute maximum ratings over operating free-air temperature range (unless otherwise noted)

Supply voltage, V_{CC} (see Note 1) . . . . . 7 V
Input voltage . . . . . 7 V
Operating free-air temperature range: SN54LS348 . . . . . −55°C to 125°C
SN74LS348 . . . . . 0°C to 70°C
Storage temperature range . . . . . −65°C to 150°C

NOTE 1: Voltage values are with respect to network ground terminal.

recommended operating conditions

		SN54LS348			SN74LS348			UNIT
		MIN	NOM	MAX	MIN	NOM	MAX	
Supply voltage, V_{CC}		4.5	5	5.5	4.75	5	5.25	V
High-level output current, I_{OH}	A0, A1, A2			−1			−2.6	mA
	EO, GS			−400			−400	μA
Low-level output current, I_{OL}	A0, A1, A2			12			24	mA
	EO, GS			4			8	mA
Operating free-air temperature, T_A		−55		125	0		70	°C

electrical characteristics over recommended operating free-air temperature range (unless otherwise noted)

PARAMETER			TEST CONDITIONS†		SN54LS348			SN74LS348			UNIT
					MIN	TYP‡	MAX	MIN	TYP‡	MAX	
V_{IH}	High-level input voltage				2			2			V
V_{IL}	Low-level input voltage						0.7			0.8	V
V_{IK}	Input clamp voltage		V_{CC} = MIN,	I_I = −18 mA			−1.5			−1.5	V
V_{OH}	High-level output voltage	A0, A1, A2	V_{CC} = MIN, V_{IH} = 2 V, V_{IL} = V_{IL}max	I_{OH} = −1 mA	2.4	3.1					V
		EO, GS		I_{OH} = −2.6 mA				2.4	3.1		
				I_{OH} = −400 μA	2.5	3.4		2.7	3.4		
V_{OL}	Low-level Output voltage	A0, A1, A2	V_{CC} = MIN, V_{IH} = 2 V, V_{IL} = V_{IL}max	I_{OL} = 12 mA		0.25	0.4		0.25	0.4	V
				I_{OL} = 24 mA					0.35	0.5	
		EO, GS		I_{OL} = 4 mA		0.25	0.4		0.25	0.4	
				I_{OL} = 8 mA					0.35	0.5	
I_{OZ}	Off-State (high-impedance state) output current	A0, A1, A2	V_{CC} = MAX, V_{IH} = 2 V	V_O = 2.7 V			20			20	μA
				V_O = 0.4 V			−20			−20	
I_I	Input current at maximum input voltage	Inputs 1 thru 7	V_{CC} = MAX,	V_I = 7 V			0.2			0.2	mA
		All other inputs					0.1			0.1	
I_{IH}	High-level input current	Inputs 1 thru 7	V_{CC} = MAX,	V_I = 2.7 V			40			40	μA
		All other inputs					20			20	
I_{IL}	Low-level input current	Inputs 1 thru 7	V_{CC} = MAX,	V_I = 0.4 V			−0.8			−0.8	mA
		All other inputs					−0.4			−0.4	
I_{OS}	Short-circuit output current§	Outputs A0, A1, A2	V_{CC} = MAX		−30		−130	−30		−130	mA
		Outputs EO, GS			−20		−100	−20		−100	
I_{CC}	Supply current		V_{CC} = MAX, See Note 2	Condition 1		13	25		13	25	mA
				Condition 2		12	23		12	23	

† For conditions shown as MIN or MAX, use the appropriate value specified under recommended operating conditions.
‡ All typical values are at V_{CC} = 5 V, T_A = 25°C.
§ Not more than one output should be shorted at a time.

NOTE 2: I_{CC} (condition 1) is measured with inputs 7 and EI grounded, other inputs and outputs open. I_{CC} (condition 2) is measured with all inputs and outputs open.

switching characteristics, V_{CC} = 5 V, T_A = 25°C

PARAMETER†	FROM (INPUT)	TO (OUTPUT)	WAVEFORM	TEST CONDITIONS	MIN	TYP	MAX	UNIT
t_{PLH}	1 thru 7	A0, A1, or A2	In-phase output	C_L = 45 pF, R_L = 667 Ω, See Note 3		11	17	ns
t_{PHL}						20	30	
t_{PLH}	1 thru 7	A0, A1, or A2	Out-of-phase output			23	35	ns
t_{PHL}						23	35	
t_{PZH}	EI	A0, A1, or A2				25	39	ns
t_{PZL}						24	41	
t_{PLH}	0 thru 7	EO	Out-of-phase output	C_L = 15 pF R_L = 2 kΩ, See Note 3		11	18	ns
t_{PHL}						26	40	
t_{PLH}	0 thru 7	GS	In-phase output			38	55	ns
t_{PHL}						9	21	
t_{PLH}	EI	GS	In-phase output			11	17	ns
t_{PHL}						14	36	
t_{PLH}	EI	EO	In-phase output			17	26	ns
t_{PHL}						25	40	
t_{PHZ}	EI	A0, A1, or A2		C_L = 5 pF R_L = 667 Ω		18	27	ns
t_{PLZ}						23	35	

† t_{PLH} = propagation delay time, low-to-high-level output
t_{PHL} = propagation delay time, high-to-low-level output
t_{PZH} = output enable time to high level
t_{PZL} = output enable time to low level
t_{PHZ} = output disable time from high level
t_{PLZ} = output disable time from low level

NOTE 3: Load circuits and voltage waveforms are shown in Section 1.

TYPICAL APPLICATION DATA

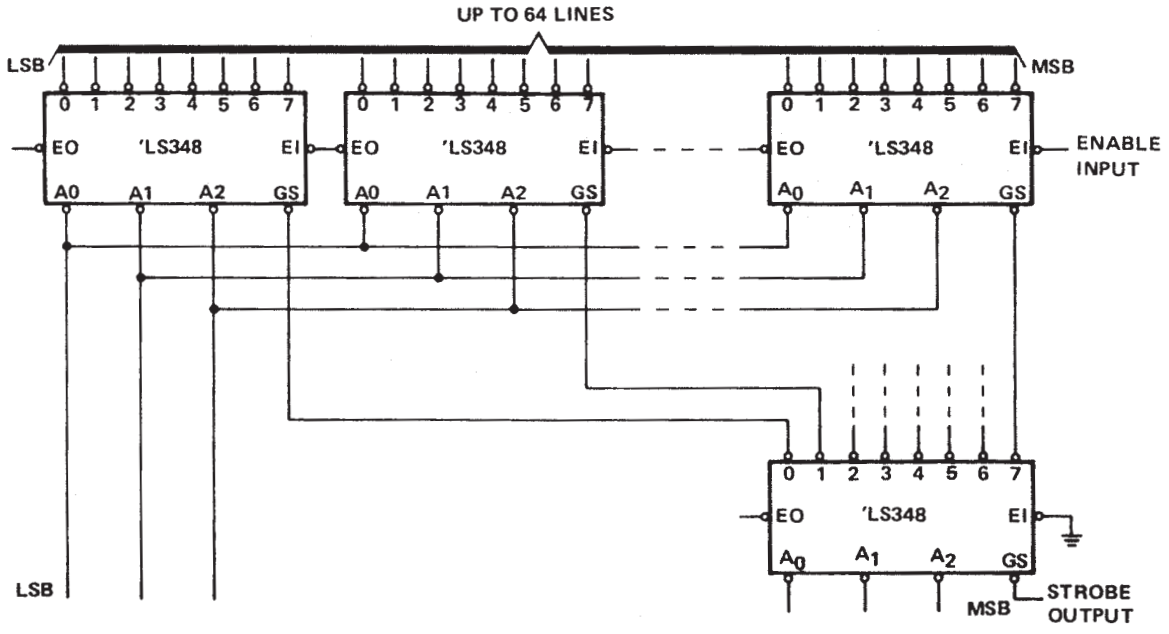

FIGURE 1–PRIORITY ENCODER WITH UP TO 64 INPUTS.

PACKAGING INFORMATION

Orderable Device	Status (1)	Package Type	Package Drawing	Pins	Package Qty	Eco Plan (2)	Lead/Ball Finish (6)	MSL Peak Temp (3)	Op Temp (°C)	Device Marking (4/5)	Samples
SN74LS348D	ACTIVE	SOIC	D	16	40	Green (RoHS & no Sb/Br)	NIPDAU	Level-1-260C-UNLIM	0 to 70	LS348	Samples
SN74LS348N	ACTIVE	PDIP	N	16	25	Green (RoHS & no Sb/Br)	NIPDAU	N / A for Pkg Type	0 to 70	SN74LS348N	Samples

(1) The marketing status values are defined as follows:
ACTIVE: Product device recommended for new designs.
LIFEBUY: TI has announced that the device will be discontinued, and a lifetime-buy period is in effect.
NRND: Not recommended for new designs. Device is in production to support existing customers, but TI does not recommend using this part in a new design.
PREVIEW: Device has been announced but is not in production. Samples may or may not be available.
OBSOLETE: TI has discontinued the production of the device.

(2) **RoHS:** TI defines "RoHS" to mean semiconductor products that are compliant with the current EU RoHS requirements for all 10 RoHS substances, including the requirement that RoHS substance do not exceed 0.1% by weight in homogeneous materials. Where designed to be soldered at high temperatures, "RoHS" products are suitable for use in specified lead-free processes. TI may reference these types of products as "Pb-Free".
RoHS Exempt: TI defines "RoHS Exempt" to mean products that contain lead but are compliant with EU RoHS pursuant to a specific EU RoHS exemption.
Green: TI defines "Green" to mean the content of Chlorine (Cl) and Bromine (Br) based flame retardants meet JS709B low halogen requirements of <=1000ppm threshold. Antimony trioxide based flame retardants must also meet the <=1000ppm threshold requirement.

(3) MSL, Peak Temp. - The Moisture Sensitivity Level rating according to the JEDEC industry standard classifications, and peak solder temperature.

(4) There may be additional marking, which relates to the logo, the lot trace code information, or the environmental category on the device.

(5) Multiple Device Markings will be inside parentheses. Only one Device Marking contained in parentheses and separated by a "~" will appear on a device. If a line is indented then it is a continuation of the previous line and the two combined represent the entire Device Marking for that device.

(6) Lead/Ball Finish - Orderable Devices may have multiple material finish options. Finish options are separated by a vertical ruled line. Lead/Ball Finish values may wrap to two lines if the finish value exceeds the maximum column width.

Important Information and Disclaimer: The information provided on this page represents TI's knowledge and belief as of the date that it is provided. TI bases its knowledge and belief on information provided by third parties, and makes no representation or warranty as to the accuracy of such information. Efforts are underway to better integrate information from third parties. TI has taken and continues to take reasonable steps to provide representative and accurate information but may not have conducted destructive testing or chemical analysis on incoming materials and chemicals. TI and TI suppliers consider certain information to be proprietary, and thus CAS numbers and other limited information may not be available for release.

In no event shall TI's liability arising out of such information exceed the total purchase price of the TI part(s) at issue in this document sold by TI to Customer on an annual basis.

N (R–PDIP–T**)

PLASTIC DUAL–IN–LINE PACKAGE

16 PINS SHOWN

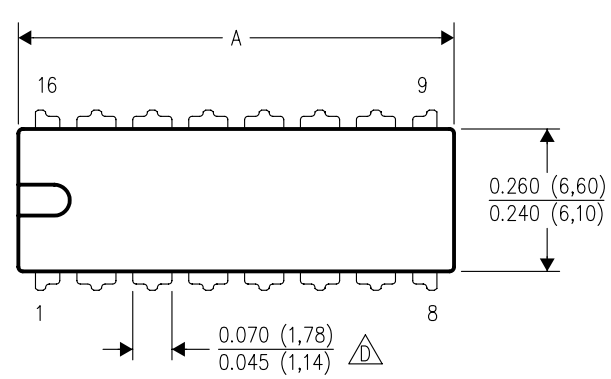

DIM \ PINS **	14	16	18	20
A MAX	0.775 (19,69)	0.775 (19,69)	0.920 (23,37)	1.060 (26,92)
A MIN	0.745 (18,92)	0.745 (18,92)	0.850 (21,59)	0.940 (23,88)
MS–001 VARIATION (C)	AA	BB	AC	AD

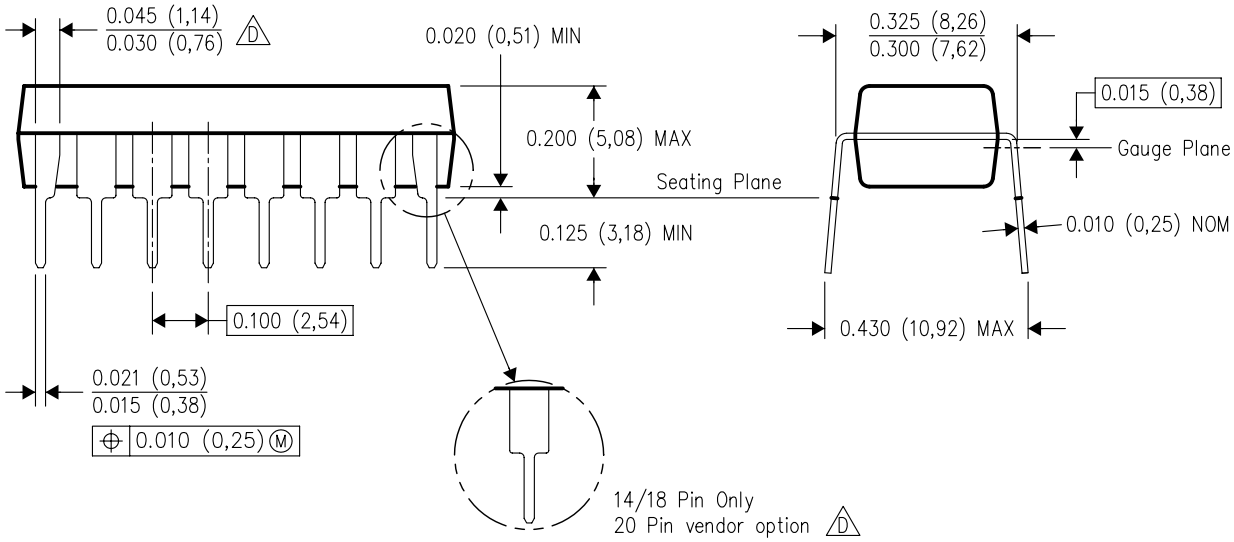

4040049/E 12/2002

NOTES:
A. All linear dimensions are in inches (millimeters).
B. This drawing is subject to change without notice.
C. Falls within JEDEC MS–001, except 18 and 20 pin minimum body length (Dim A).
D. The 20 pin end lead shoulder width is a vendor option, either half or full width.

D (R–PDSO–G16) PLASTIC SMALL OUTLINE

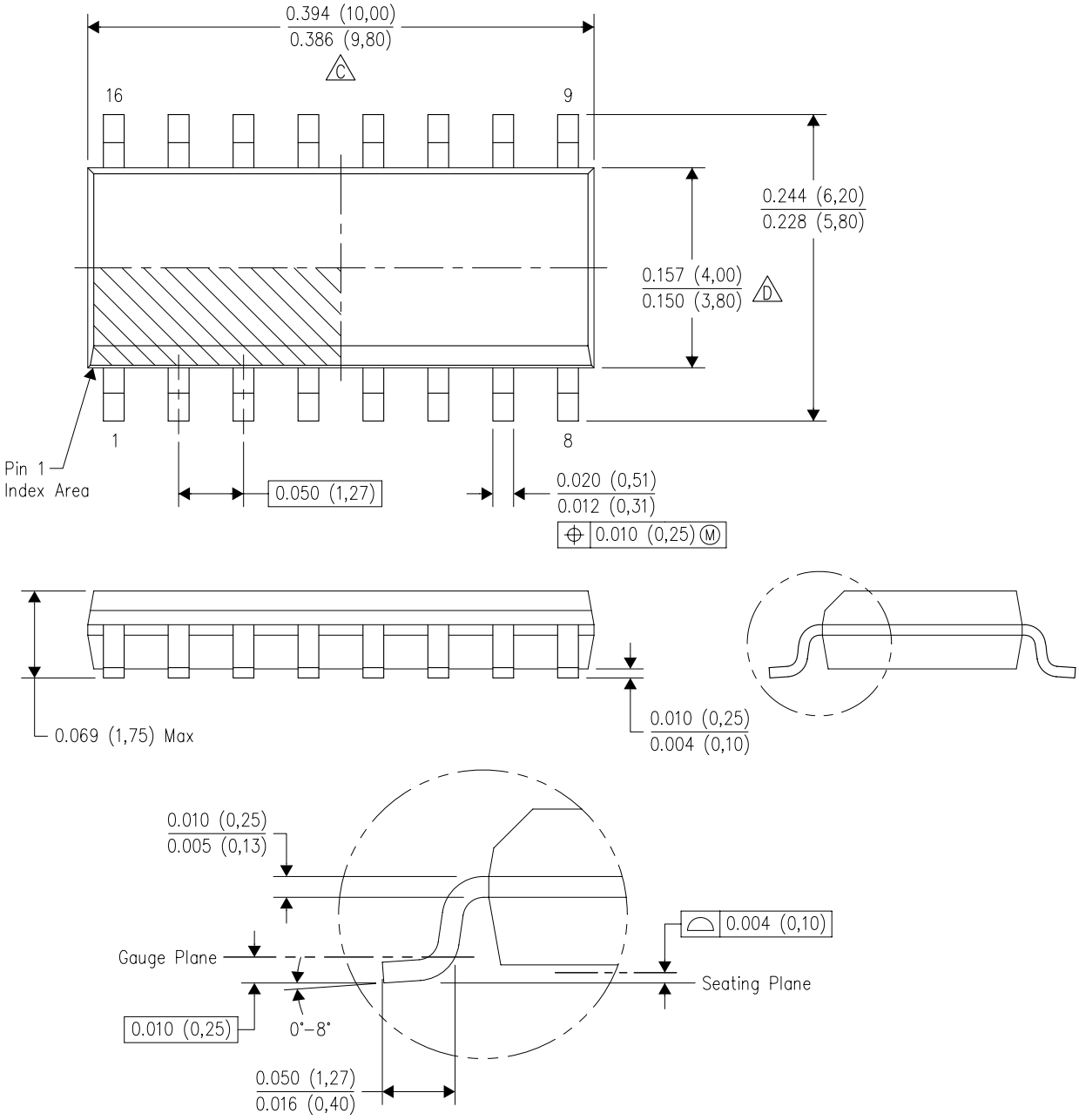

NOTES:
A. All linear dimensions are in inches (millimeters).
B. This drawing is subject to change without notice.
C. Body length does not include mold flash, protrusions, or gate burrs. Mold flash, protrusions, or gate burrs shall not exceed 0.006 (0,15) each side.
D. Body width does not include interlead flash. Interlead flash shall not exceed 0.017 (0,43) each side.
E. Reference JEDEC MS–012 variation AC.

D (R–PDSO–G16) PLASTIC SMALL OUTLINE

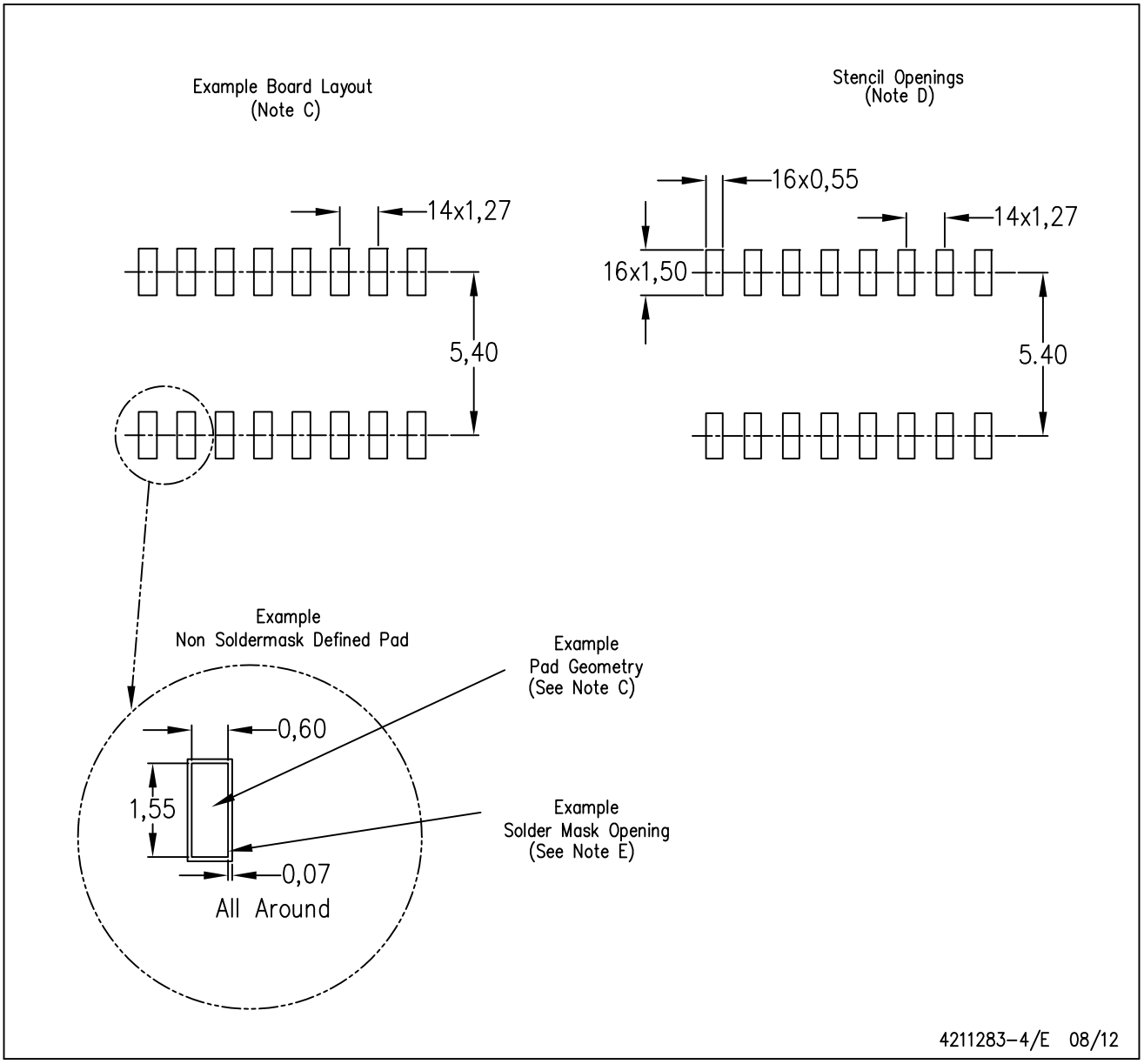

NOTES:
A. All linear dimensions are in millimeters.
B. This drawing is subject to change without notice.
C. Publication IPC–7351 is recommended for alternate designs.
D. Laser cutting apertures with trapezoidal walls and also rounding corners will offer better paste release. Customers should contact their board assembly site for stencil design recommendations. Refer to IPC–7525 for other stencil recommendations.
E. Customers should contact their board fabrication site for solder mask tolerances between and around signal pads.

IMPORTANT NOTICE AND DISCLAIMER

TI PROVIDES TECHNICAL AND RELIABILITY DATA (INCLUDING DATASHEETS), DESIGN RESOURCES (INCLUDING REFERENCE DESIGNS), APPLICATION OR OTHER DESIGN ADVICE, WEB TOOLS, SAFETY INFORMATION, AND OTHER RESOURCES “AS IS” AND WITH ALL FAULTS, AND DISCLAIMS ALL WARRANTIES, EXPRESS AND IMPLIED, INCLUDING WITHOUT LIMITATION ANY IMPLIED WARRANTIES OF MERCHANTABILITY, FITNESS FOR A PARTICULAR PURPOSE OR NON-INFRINGEMENT OF THIRD PARTY INTELLECTUAL PROPERTY RIGHTS.

These resources are intended for skilled developers designing with TI products. You are solely responsible for (1) selecting the appropriate TI products for your application, (2) designing, validating and testing your application, and (3) ensuring your application meets applicable standards, and any other safety, security, or other requirements. These resources are subject to change without notice. TI grants you permission to use these resources only for development of an application that uses the TI products described in the resource. Other reproduction and display of these resources is prohibited. No license is granted to any other TI intellectual property right or to any third party intellectual property right. TI disclaims responsibility for, and you will fully indemnify TI and its representatives against, any claims, damages, costs, losses, and liabilities arising out of your use of these resources.

TI’s products are provided subject to TI’s Terms of Sale (www.ti.com/legal/termsofsale.html) or other applicable terms available either on ti.com or provided in conjunction with such TI products. TI’s provision of these resources does not expand or otherwise alter TI’s applicable warranties or warranty disclaimers for TI products.

Mailing Address: Texas Instruments, Post Office Box 655303, Dallas, Texas 75265
Copyright © 2020, Texas Instruments Incorporated