SN74AVC24T245
24-BIT DUAL-SUPPLY BUS TRANSCEIVER WITH CONFIGURABLE VOLTAGE TRANSLATION AND 3-STATE OUTPUTS

SCES552C – FEBRUARY 2004 – REVISED AUGUST 2005

FEATURES

- **Control Inputs V_{IH}/V_{IL} Levels Are Referenced to V_{CCA} Voltage**
- **V_{CC} Isolation Feature – If Either V_{CC} Input Is at GND, All Outputs Are in the High-Impedance State**
- **Overvoltage-Tolerant Inputs/Outputs Allow Mixed-Voltage-Mode Data Communications**
- **Fully Configurable Dual-Rail Design Allows Each Port to Operate Over Full 1.2-V to 3.6-V Power-Supply Range**
- **I_{off} Supports Partial-Power-Down Mode Operation**
- **I/Os Are 4.6-V Tolerant**
- **Latch-Up Performance Exceeds 100 mA Per JESD 78, Class II**
- **ESD Protection Exceeds JESD 22**
  - **8000-V Human-Body Model (A114-A)**
  - **200-V Machine Model (A115-A)**
  - **1000-V Charged-Device Model (C101)**

DESCRIPTION/ORDERING INFORMATION

This 24-bit noninverting bus transceiver uses two separate configurable power-supply rails. The SN74AVC24T245 is optimized to operate with V_{CCA}/V_{CCB} set at 1.4 V to 3.6 V. It is operational with V_{CCA}/V_{CCB} as low as 1.2 V. The A port is designed to track V_{CCA}. V_{CCA} accepts any supply voltage from 1.2 V to 3.6 V. The B port is designed to track V_{CCB}. V_{CCB} accepts any supply voltage from 1.2 V to 3.6 V. This allows for universal low-voltage bidirectional translation between any of the 1.2-V, 1.5-V, 1.8-V, 2.5-V, and 3.3-V voltage nodes.

The SN74AVC24T245 is designed for asynchronous communication between data buses. The device transmits data from the A bus to the B bus or from the B bus to the A bus, depending on the logic level at the direction-control (DIR) input. The output-enable ($\overline{OE}$) input can be used to disable the outputs so the buses are effectively isolated.

The SN74AVC24T245 is designed so that the control pins (1DIR, 2DIR, 3DIR, 4DIR, 5DIR, 6DIR, $1\overline{OE}$, $2\overline{OE}$, $3\overline{OE}$, $4\overline{OE}$, $5\overline{OE}$, and $6\overline{OE}$) are supplied by V_{CCA}.

This device is fully specified for partial-power-down applications using I_{off}. The I_{off} circuitry disables the outputs, preventing damaging current backflow through the device when it is powered down.

The V_{CC} isolation feature ensures that if either V_{CC} input is at GND, then both ports are in the high-impedance state.

To ensure the high-impedance state during power up or power down, $\overline{OE}$ should be tied to V_{CCA} through a pullup resistor; the minimum value of the resistor is determined by the current-sinking capability of the driver.

ORDERING INFORMATION

T_A	PACKAGE(1)		ORDERABLE PART NUMBER	TOP-SIDE MARKING
–40°C to 85°C	LFBGA – GRG	Tape and reel	SN74AVC24T245GRGR	WH245
	LFBGA – ZRG (Pb-free)	Tape and reel	SN74AVC24T245ZRGR	

(1) Package drawings, standard packing quantities, thermal data, symbolization, and PCB design guidelines are available at www.ti.com/sc/package.

Please be aware that an important notice concerning availability, standard warranty, and use in critical applications of Texas Instruments semiconductor products and disclaimers thereto appears at the end of this data sheet.

PRODUCTION DATA information is current as of publication date. Products conform to specifications per the terms of the Texas Instruments standard warranty. Production processing does not necessarily include testing of all parameters.

Copyright © 2004–2005, Texas Instruments Incorporated

GRG OR ZRG PACKAGE
(TOP VIEW)

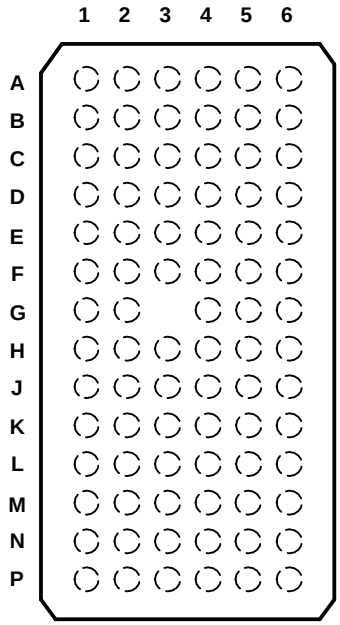

TERMINAL FUNCTIONS

	1	2	3	4	5	6
A	6$\overline{OE}$	5$\overline{OE}$	4$\overline{OE}$	3$\overline{OE}$	2$\overline{OE}$	1$\overline{OE}$
B	1B1	1B2	V_{CCB}	V_{CCA}	1A2	1A1
C	1B3	1B4	GND	GND	1A4	1A3
D	2B1	2B2	V_{CCB}	V_{CCA}	2A2	2A1
E	2B3	2B4	GND	GND	2A4	2A3
F	3B1	3B2	GND	GND	3A2	3A1
G	3B3	3B4		GND	3A4	3A3
H	4B1	4B2	V_{CCB}	V_{CCA}	4A2	4A1
J	4B3	4B4	GND	GND	4A4	4A3
K	5B1	5B2	GND	GND	5A2	5A1
L	5B3	5B4	V_{CCB}	V_{CCA}	5A4	5A3
M	6B1	6B2	GND	GND	6A2	6A1
N	6B3	6B4	V_{CCB}	V_{CCA}	6A4	6A3
P	6DIR	5DIR	4DIR	3DIR	2DIR	1DIR

FUNCTION TABLE
(EACH 4-BIT SECTION)

INPUTS		OPERATION
$\overline{OE}$	DIR	
L	L	B data to A bus
L	H	A data to B bus
H	X	Isolation

LOGIC DIAGRAM (POSITIVE LOGIC)

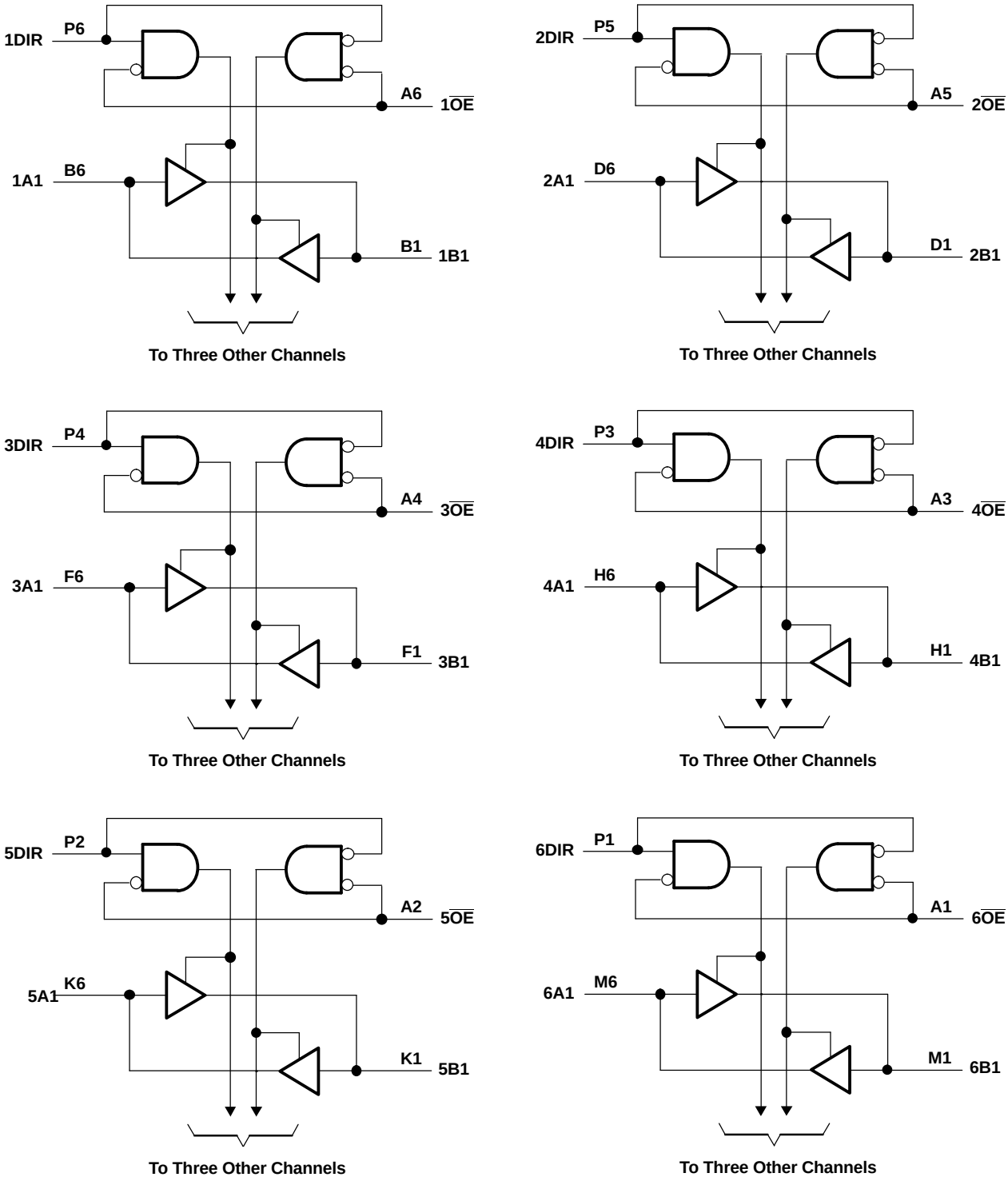

Absolute Maximum Ratings(1)

over operating free-air temperature range (unless otherwise noted)

			MIN	MAX	UNIT
V_{CCA} V_{CCB}	Supply voltage range		–0.5	4.6	V
V_I	Input voltge range(2)	I/O ports (A port)	–0.5	4.6	V
		I/O ports (B port)	–0.5	4.6	
		Control inputs	–0.5	4.6	
V_O	Voltage range applied to any output in the high-impedance or power-off state(2)	A port	–0.5	4.6	V
		B port	–0.5	4.6	
V_O	Voltage range applied to any output in the high or low state(2)(3)	A port	–0.5	V_{CCA} + 0.5	V
		B port	–0.5	V_{CCB} + 0.5	
I_{IK}	Input clamp current	V_I < 0		–50	mA
I_{OK}	Output clamp current	V_O < 0		–50	mA
I_O	Continuous output current			±50	mA
	Continuous current through each V_{CCA}, V_{CCB}, and GND			±100	mA
θ_{JA}	Package thermal impedance(4)	GRG/ZRG package		50	°C/W
T_{stg}	Storage temperature range		–65	150	°C

(1) Stresses beyond those listed under "absolute maximum ratings" may cause permanent damage to the device. These are stress ratings only, and functional operation of the device at these or any other conditions beyond those indicated under "recommended operating conditions" is not implied. Exposure to absolute-maximum-rated conditions for extended periods may affect device reliability.
(2) The input voltage and output negative-voltage ratings may be exceeded if the input and output current ratings are observed.
(3) The output positive-voltage rating may be exceeded up to 4.6 V maximum if the output current rating is observed.
(4) The package thermal impedance is calculated in accordance with JESD 51-7.

Recommended Operating Conditions[1][2][3]

			V_{CCI}	V_{CCO}	MIN	MAX	UNIT
V_{CCA}	Supply voltage				1.2	3.6	V
V_{CCB}	Supply voltage				1.2	3.6	V
V_{IH}	High-level input voltage	Data inputs[4]	1.2 V to 1.95 V		$V_{CCI} \times 0.65$		V
			1.95 V to 2.7 V		1.6		
			2.7 V to 3.6 V		2		
V_{IL}	Low-level input voltage	Data inputs[4]	1.2 V to 1.95 V			$V_{CCI} \times 0.35$	V
			1.95 V to 2.7 V			0.7	
			2.7 V to 3.6 V			0.8	
V_{IH}	High-level input voltage	DIR (referenced to V_{CCA})[5]	1.2 V to 1.95 V		$V_{CCA} \times 0.65$		V
			1.95 V to 2.7 V		1.6		
			2.7 V to 3.6 V		2		
V_{IL}	Low-level input voltage	DIR (referenced to V_{CCA})[5]	1.2 V to 1.95 V			$V_{CCA} \times 0.35$	V
			1.95 V to 2.7 V			0.7	
			2.7 V to 3.6 V			0.8	
V_I	Input voltage				0	3.6	V
V_O	Output voltage	Active state			0	V_{CCO}	V
		3-state			0	3.6	
I_{OH}	High-level output current			1.2 V		–3	mA
				1.4 V to 1.6 V		–6	
				1.65 V to 1.95 V		–8	
				2.3 V to 2.7 V		–9	
				3 V to 3.6 V		–12	
I_{OL}	Low-level output current			1.2 V		3	mA
				1.4 V to 1.6 V		6	
				1.65 V to 1.95 V		8	
				2.3 V to 2.7 V		9	
				3 V to 3.6 V		12	
$\Delta t/\Delta v$	Input transition rise or fall rate					5	ns/V
T_A	Operating free-air temperature				–40	85	°C

(1) V_{CCI} is the V_{CC} associated with the data input port.
(2) V_{CCO} is the V_{CC} associated with the output port.
(3) All unused data inputs of the device must be held at V_{CCI} or GND to ensure proper device operation. Refer to the TI application report, *Implications of Slow or Floating CMOS Inputs*, literature number SCBA004.
(4) For V_{CCI} values not specified in the data sheet, V_{IH} min = $V_{CCI} \times 0.7$ V, V_{IL} max = $V_{CCI} \times 0.3$ V.
(5) For V_{CCI} values not specified in the data sheet, V_{IH} min = $V_{CCA} \times 0.7$ V, V_{IL} max = $V_{CCA} \times 0.3$ V.

Electrical Characteristics

over recommended operating free-air temperature range (unless otherwise noted)(1)(2)

PARAMETER		TEST CONDITIONS		V_{CCA}	V_{CCB}	T_A = 25°C			–40°C to 85°C		UNIT
						MIN	TYP	MAX	MIN	MAX	
V_{OH}		I_{OH} = –100 µA	$V_I = V_{IH}$	1.2 V to 3.6 V	1.2 V to 3.6 V				V_{CCO} – 0.2		V
		I_{OH} = –3 mA		1.2 V	1.2 V		0.95				
		I_{OH} = –6 mA		1.4 V	1.4 V				1.05		
		I_{OH} = –8 mA		1.65 V	1.65 V				1.2		
		I_{OH} = –9 mA		2.3 V	2.3 V				1.75		
		I_{OH} = –12 m		3 V	3 V				2.3		
V_{OL}		I_{OL} = 100 µA	$V_I = V_{IL}$	1.2 V to 3.6 V	1.2 V to 3.6 V					0.2	V
		I_{OL} = 3 mA		1.2 V	1.2 V		0.15				
		I_{OL} = 6 mA		1.4 V	1.4 V					0.35	
		I_{OL} = 8 mA		1.65 V	1.65 V					0.45	
		I_{OL} = 9 mA		2.3 V	2.3 V					0.55	
		I_{OL} = 12 mA		3 V	3 V					0.7	
I_I	Control inputs	$V_I = V_{CCA}$ or GND		1.2 V to 3.6 V	1.2 V to 3.6 V		±0.025	±0.25		±1	µA
I_{off}	A or B port	V_I or V_O = 0 to 3.6 V		0 V	0 to 3.6 V		±0.1	±2.5		±5	µA
	A or B port			0 to 3.6 V	0 V		±0.1	±2.5		±5	
I_{OZ}(3)	A or B port	$V_O = V_{CCO}$ or GND, $V_I = V_{CCI}$ or GND, $\overline{OE} = V_{IH}$		3.6 V	3.6 V		±0.5	±2.5		±5	µA
I_{CCA}		$V_I = V_{CCI}$ or GND, I_O = 0		1.2 V to 3.6 V	1.2 V to 3.6 V					40	µA
				0 V	3.6 V					–5	
				3.6 V	0 V					40	
I_{CCB}		$V_I = V_{CCI}$ or GND, I_O = 0		1.2 V to 3.6 V	1.2 V to 3.6 V					40	µA
				0 V	3.6 V					40	
				3.6 V	0 V					–5	
$I_{CCA} + I_{CCB}$		$V_I = V_{CCI}$ or GND, I_O = 0		1.2 V to 3.6 V	1.2 V to 3.6 V					75	µA
C_i	Control inputs	V_I = 3.3 V or GND		3.3 V	3.3 V		3.5				pF
C_{io}	A or B port	V_O = 3.3 V or GND		3.3 V	3.3 V		7				pF

(1) V_{CCO} is the V_{CC} associated with the output port.
(2) V_{CCI} is the V_{CC} associated with the input port.
(3) For I/O ports, the parameter I_{OZ} includes the input leakage current.

Switching Characteristics

over recommended operating free-air temperature range, V_{CCA} = 1.2 V (see Figure 1)

PARAMETER	FROM (INPUT)	TO (OUTPUT)	V_{CCB} = 1.2 V	V_{CCB} = 1.5 V	V_{CCB} = 1.8 V	V_{CCB} = 2.5 V	V_{CCB} = 3.3 V	UNIT
			TYP	TYP	TYP	TYP	TYP	
t_{PLH}	A	B	4.1	3.3	3	2.8	3.2	ns
t_{PHL}			4.1	3.3	3	2.8	3.2	
t_{PLH}	B	A	4.4	4	3.8	3.6	3.5	ns
t_{PHL}			4.4	4	3.8	3.6	3.5	
t_{PZH}	$\overline{OE}$	A	6.4	6.4	6.4	6.4	6.4	ns
t_{PZL}			6.4	6.4	6.4	6.4	6.4	
t_{PZH}	$\overline{OE}$	B	6	4.6	4	3.4	3.2	ns
t_{PZL}			6	4.6	4	3.4	3.2	
t_{PHZ}	$\overline{OE}$	A	6.6	6.6	6.6	6.6	6.8	ns
t_{PLZ}			6.6	6.6	6.6	6.6	6.8	
t_{PHZ}	$\overline{OE}$	B	6	4.9	4.9	4.2	5.3	ns
t_{PLZ}			6	4.9	4.9	4.2	5.3	

Switching Characteristics

over recommended operating free-air temperature range, V_{CCA} = 1.5 V ± 0.1 V (see Figure 1)

PARAMETER	FROM (INPUT)	TO (OUTPUT)	V_{CCB} = 1.2 V	V_{CCB} = 1.5 V ± 0.1 V		V_{CCB} = 1.8 V ± 0.15 V		V_{CCB} = 2.5 V ± 0.2 V		V_{CCB} = 3.3 V ± 0.3 V		UNIT
			TYP	MIN	MAX	MIN	MAX	MIN	MAX	MIN	MAX	
t_{PLH}	A	B	3.6	0.5	6.2	0.5	5.2	0.5	4.1	0.5	3.7	ns
t_{PHL}			3.6	0.5	6.2	0.5	5.2	0.5	4.1	0.5	3.7	
t_{PLH}	B	A	3.3	0.5	6.2	0.5	5.9	0.5	5.6	0.5	5.5	ns
t_{PHL}			3.3	0.5	6.2	0.5	5.9	0.5	5.6	0.5	5.5	
t_{PZH}	$\overline{OE}$	A	4.3	1	10.1	1	10.1	1	10.1	1	10.1	ns
t_{PZL}			4.3	1	10.1	1	10.1	1	10.1	1	10.1	
t_{PZH}	$\overline{OE}$	B	5.6	1	10.1	0.5	8.1	0.5	5.9	0.5	5.2	ns
t_{PZL}			5.6	1	10.1	0.5	8.1	0.5	5.9	0.5	5.2	
t_{PHZ}	$\overline{OE}$	A	4.5	1.5	9.1	1.5	9.1	1.5	9.1	1.5	9.1	ns
t_{PLZ}			4.5	1.5	9.1	1.5	9.1	1.5	9.1	1.5	9.1	
t_{PHZ}	$\overline{OE}$	B	5.5	1.5	8.7	1.5	7.5	1	6.5	1	6.3	ns
t_{PLZ}			5.5	1.5	8.7	1.5	7.5	1	6.5	1	6.3	

Switching Characteristics

over recommended operating free-air temperature range, V_{CCA} = 1.8 V ± 0.15 V (see Figure 1)

PARAMETER	FROM (INPUT)	TO (OUTPUT)	V_{CCB} = 1.2 V	V_{CCB} = 1.5 V ± 0.1 V		V_{CCB} = 1.8 V ± 0.15 V		V_{CCB} = 2.5 V ± 0.2 V		V_{CCB} = 3.3 V ± 0.3 V		UNIT
			TYP	MIN	MAX	MIN	MAX	MIN	MAX	MIN	MAX	
t_{PLH}	A	B	3.4	0.5	5.9	0.5	4.8	0.5	3.7	0.5	3.3	ns
t_{PHL}			3.4	0.5	5.9	0.5	4.8	0.5	3.7	0.5	3.3	
t_{PLH}	B	A	3	0.5	5.2	0.5	4.8	0.5	4.5	0.5	4.4	ns
t_{PHL}			3	0.5	5.2	0.5	4.8	0.5	4.5	0.5	4.4	
t_{PZH}	$\overline{OE}$	A	3.4	1	7.8	1	7.8	1	7.8	1	7.8	ns
t_{PZL}			3.4	1	7.8	1	7.8	1	7.8	1	7.8	
t_{PZH}	$\overline{OE}$	B	5.4	1	9.2	0.5	7.4	0.5	5.3	0.5	4.5	ns
t_{PZL}			5.4	1	9.2	0.5	7.4	0.5	5.3	0.5	4.5	
t_{PHZ}	$\overline{OE}$	A	4.2	1.5	7.7	1.5	7.7	1.5	7.7	1.5	7.7	ns
t_{PLZ}			4.2	1.5	7.7	1.5	7.7	1.5	7.7	1.5	7.7	
t_{PHZ}	$\overline{OE}$	B	5.2	1.5	8.4	1.5	7.1	1	5.9	1	5.7	ns
t_{PLZ}			5.2	1.5	8.4	1.5	7.1	1	5.9	1	5.7	

Switching Characteristics

over recommended operating free-air temperature range, V_{CCA} = 2.5 V ± 0.2 V (see Figure 1)

PARAMETER	FROM (INPUT)	TO (OUTPUT)	V_{CCB} = 1.2 V	V_{CCB} = 1.5 V ± 0.1 V		V_{CCB} = 1.8 V ± 0.15 V		V_{CCB} = 2.5 V ± 0.2 V		V_{CCB} = 3.3 V ± 0.3 V		UNIT
			TYP	MIN	MAX	MIN	MAX	MIN	MAX	MIN	MAX	
t_{PLH}	A	B	3.2	0.5	5.6	0.5	4.5	0.5	3.3	0.5	2.8	ns
t_{PHL}			3.2	0.5	5.6	0.5	4.5	0.5	3.3	0.5	2.8	
t_{PLH}	B	A	2.6	0.5	4.1	0.5	3.7	0.5	3.3	0.5	3.2	ns
t_{PHL}			2.6	0.5	4.1	0.5	3.7	0.5	3.3	0.5	3.2	
t_{PZH}	$\overline{OE}$	A	2.5	0.5	5.3	0.5	5.3	0.5	5.3	0.5	5.3	ns
t_{PZL}			2.5	0.5	5.3	0.5	5.3	0.5	5.3	0.5	5.3	
t_{PZH}	$\overline{OE}$	B	5.2	0.5	9.4	0.5	7.3	0.5	5.1	0.5	4.5	ns
t_{PZL}			5.2	0.5	9.4	0.5	7.3	0.5	5.1	0.5	4.5	
t_{PHZ}	$\overline{OE}$	A	3	1	6.1	1	6.1	1	6.1	1	6.1	ns
t_{PLZ}			3	1	6.1	1	6.1	1	6.1	1	6.1	
t_{PHZ}	$\overline{OE}$	B	5	1	7.9	1	6.6	1	6.1	1	5.2	ns
t_{PLZ}			5	1	7.9	1	6.6	1	6.1	1	5.2	

Switching Charactertistics

over recommended operating free-air temperature range, V_{CCA} = 3.3 V ± 0.3 V (see Figure 1)

PARAMETER	FROM (INPUT)	TO (OUTPUT)	V_{CCB} = 1.2 V	V_{CCB} = 1.5 V ± 0.1 V		V_{CCB} = 1.8 V ± 0.15 V		V_{CCB} = 2.5 V ± 0.2 V		V_{CCB} = 3.3 V ± 0.3 V		UNIT
			TYP	MIN	MAX	MIN	MAX	MIN	MAX	MIN	MAX	
t_{PLH}	A	B	3.2	0.5	5.5	0.5	4.4	0.5	3.2	0.5	2.7	ns
t_{PHL}			3.2	0.5	5.5	0.5	4.4	0.5	3.2	0.5	2.7	
t_{PLH}	B	A	2.8	0.5	3.7	0.5	3.3	0.5	2.8	0.5	2.7	ns
t_{PHL}			2.8	0.5	3.7	0.5	3.3	0.5	2.8	0.5	2.7	
t_{PZH}	$\overline{OE}$	A	2.2	0.5	4.3	0.5	4.2	0.5	4.1	0.5	4	ns
t_{PZL}			2.2	0.5	4.3	0.5	4.2	0.5	4.1	0.5	4	
t_{PZH}	$\overline{OE}$	B	5.1	0.5	9.3	0.5	7.2	0.5	4.9	0.5	4	ns
t_{PZL}			5.1	0.5	9.3	0.5	7.2	0.5	4.9	0.5	4	
t_{PHZ}	$\overline{OE}$	A	3.4	0.5	5	0.5	5	0.5	5	0.5	5	ns
t_{PLZ}			3.4	0.5	5	0.5	5	0.5	5	0.5	5	
t_{PHZ}	$\overline{OE}$	B	4.9	1	7.7	1	6.5	1	5.2	0.5	5	ns
t_{PLZ}			4.9	1	7.7	1	6.5	1	5.2	0.5	5	

Operating Characteristics

V_{CCA} and V_{CCB} = 3.3 V, T_A = 25°C

PARAMETER			TEST CONDITIONS	V_{CCA} = V_{CCB} = 1.5 V	V_{CCA} = V_{CCB} = 1.2 V	V_{CCA} = V_{CCB} = 1.8 V	V_{CCA} = V_{CCB} = 2.5 V	V_{CCA} = V_{CCB} = 3.3 V	UNIT
				TYP	TYP	TYP	TYP	TYP	
C_{pdA}(1)	A to B	Outputs enabled	C_L = 0, f = 10 MHz, t_r = t_f = 1 ns	1	1	1	2	2	pF
		Outputs disabled		1	1	1	1	2	
	B to A	Outputs enabled		19	19	20	21	22	
		Outputs disabled		1	1	1	1	1	
C_{pdB}(1)	A to B	Outputs enabled	C_L = 0, f = 10 MHz, t_r = t_f = 1 ns	19	19	20	21	22	pF
		Outputs disabled		1	1	1	1	1	
	B to A	Outputs enabled		1	1	1	2	2	
		Outputs disabled		1	1	1	1	2	

(1) Power dissipation capacitance per transceiver

PARAMETER MEASUREMENT INFORMATION

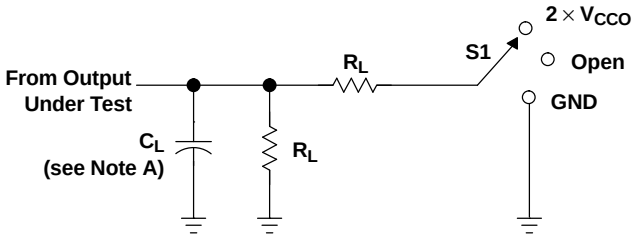

LOAD CIRCUIT

TEST	S1
t_{pd}	Open
t_{PLZ}/t_{PZL}	$2 \times V_{CCO}$
t_{PHZ}/t_{PZH}	GND

V_{CCO}	C_L	R_L	V_{TP}
1.5 V ± 0.1 V	15 pF	2 kΩ	0.1 V
1.8 V ± 0.15 V	15 pF	2 kΩ	0.15 V
2.5 V ± 0.2 V	15 pF	2 kΩ	0.15 V
3.3 V ± 0.3 V	15 pF	2 kΩ	0.3 V

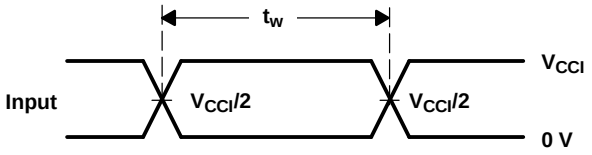

VOLTAGE WAVEFORMS
PULSE DURATION

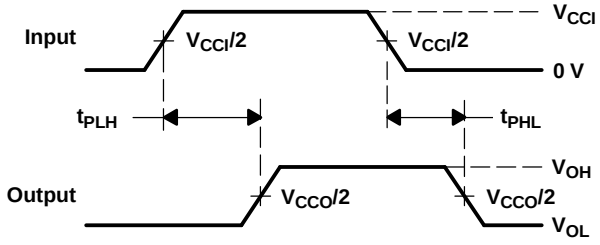

VOLTAGE WAVEFORMS
PROPAGATION DELAY TIMES

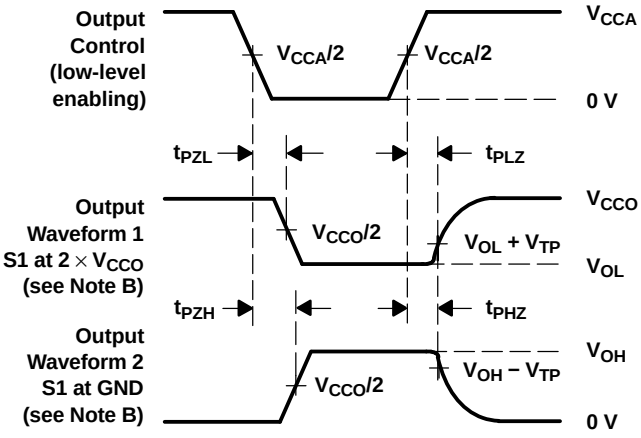

VOLTAGE WAVEFORMS
ENABLE AND DISABLE TIMES

NOTES: A. C_L includes probe and jig capacitance.
B. Waveform 1 is for an output with internal conditions such that the output is low, except when disabled by the output control. Waveform 2 is for an output with internal conditions such that the output is high, except when disabled by the output control.
C. All input pulses are supplied by generators having the following characteristics: PRR ≤ 10 MHz, Z_O = 50 Ω, dv/dt ≥ 1 V/ns.
D. The outputs are measured one at a time, with one transition per measurement.
E. t_{PLZ} and t_{PHZ} are the same as t_{dis}.
F. t_{PZL} and t_{PZH} are the same as t_{en}.
G. t_{PLH} and t_{PHL} are the same as t_{pd}.
H. V_{CCI} is the V_{CC} associated with the input port.
I. V_{CCO} is the V_{CC} associated with the output port.

Figure 1. Load Circuit and Voltage Waveforms

PACKAGING INFORMATION

Orderable Device	Status (1)	Package Type	Package Drawing	Pins	Package Qty	Eco Plan (2)	Lead/Ball Finish	MSL Peak Temp (3)
SN74AVC24T245GRGR	ACTIVE	BGA MICROSTAR JUNIOR	GRG	83	1000	TBD	SNPB	Level-1-240C-UNLIM
SN74AVC24T245ZRGR	ACTIVE	BGA MICROSTAR JUNIOR	ZRG	83	1000	Green (RoHS & no Sb/Br)	SNAGCU	Level-1-260C-UNLIM

(1) The marketing status values are defined as follows:
ACTIVE: Product device recommended for new designs.
LIFEBUY: TI has announced that the device will be discontinued, and a lifetime-buy period is in effect.
NRND: Not recommended for new designs. Device is in production to support existing customers, but TI does not recommend using this part in a new design.
PREVIEW: Device has been announced but is not in production. Samples may or may not be available.
OBSOLETE: TI has discontinued the production of the device.

(2) Eco Plan - The planned eco-friendly classification: Pb-Free (RoHS), Pb-Free (RoHS Exempt), or Green (RoHS & no Sb/Br) - please check http://www.ti.com/productcontent for the latest availability information and additional product content details.
TBD: The Pb-Free/Green conversion plan has not been defined.
Pb-Free (RoHS): TI's terms "Lead-Free" or "Pb-Free" mean semiconductor products that are compatible with the current RoHS requirements for all 6 substances, including the requirement that lead not exceed 0.1% by weight in homogeneous materials. Where designed to be soldered at high temperatures, TI Pb-Free products are suitable for use in specified lead-free processes.
Pb-Free (RoHS Exempt): This component has a RoHS exemption for either 1) lead-based flip-chip solder bumps used between the die and package, or 2) lead-based die adhesive used between the die and leadframe. The component is otherwise considered Pb-Free (RoHS compatible) as defined above.
Green (RoHS & no Sb/Br): TI defines "Green" to mean Pb-Free (RoHS compatible), and free of Bromine (Br) and Antimony (Sb) based flame retardants (Br or Sb do not exceed 0.1% by weight in homogeneous material)

(3) MSL, Peak Temp. -- The Moisture Sensitivity Level rating according to the JEDEC industry standard classifications, and peak solder temperature.

Important Information and Disclaimer: The information provided on this page represents TI's knowledge and belief as of the date that it is provided. TI bases its knowledge and belief on information provided by third parties, and makes no representation or warranty as to the accuracy of such information. Efforts are underway to better integrate information from third parties. TI has taken and continues to take reasonable steps to provide representative and accurate information but may not have conducted destructive testing or chemical analysis on incoming materials and chemicals. TI and TI suppliers consider certain information to be proprietary, and thus CAS numbers and other limited information may not be available for release.

In no event shall TI's liability arising out of such information exceed the total purchase price of the TI part(s) at issue in this document sold by TI to Customer on an annual basis.

GRG (R–PBGA–N83) PLASTIC BALL GRID ARRAY

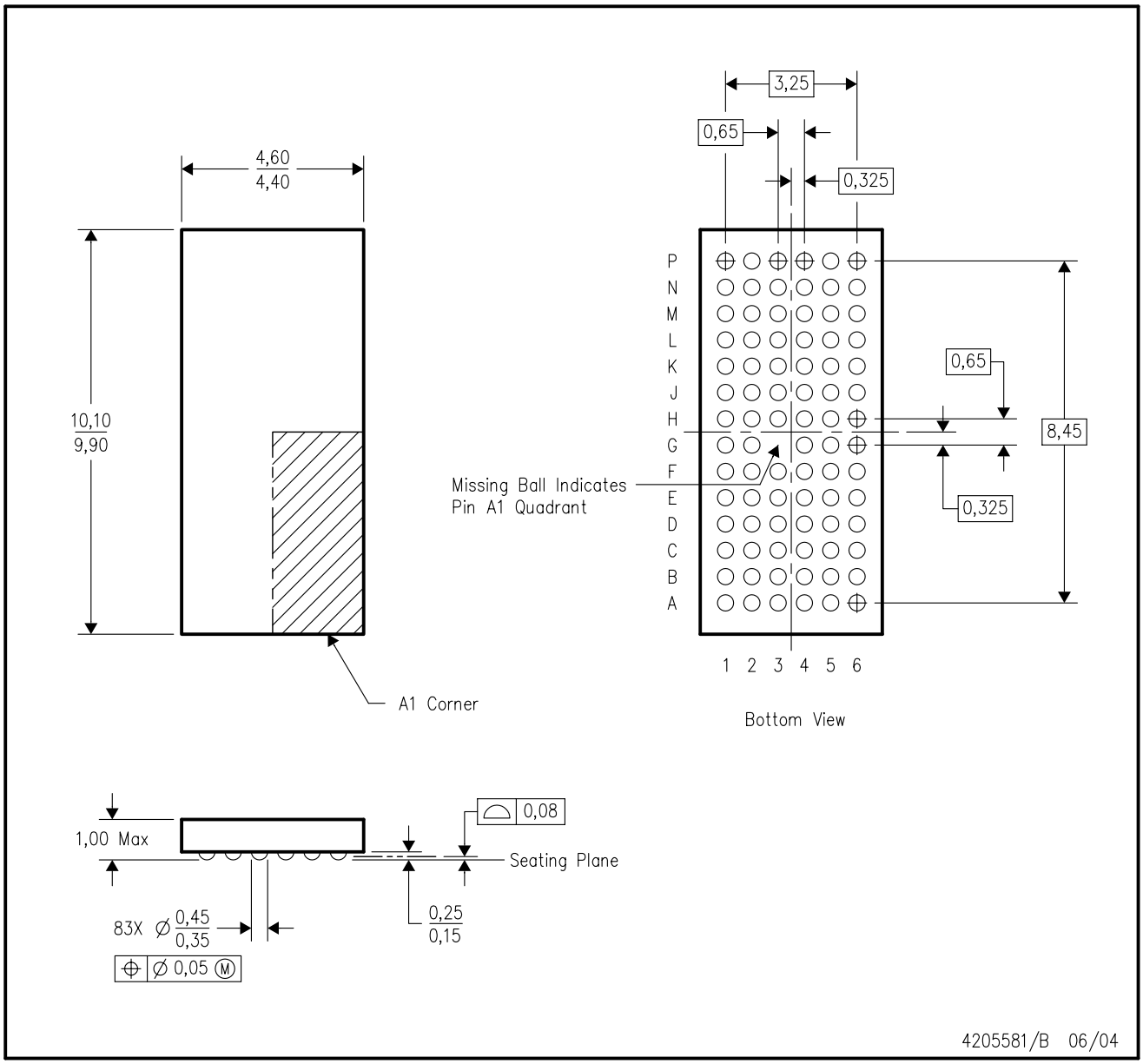

NOTES:
A. All linear dimensions are in millimeters.
B. This drawing is subject to change without notice.
C. JEDEC MO–225 registration is pending.
D. This package is tin–lead (SnPb). Refer to the 83 ZRG package (drawing 4205696) for lead–free.

ZRG (R–PBGA–N83) PLASTIC BALL GRID ARRAY

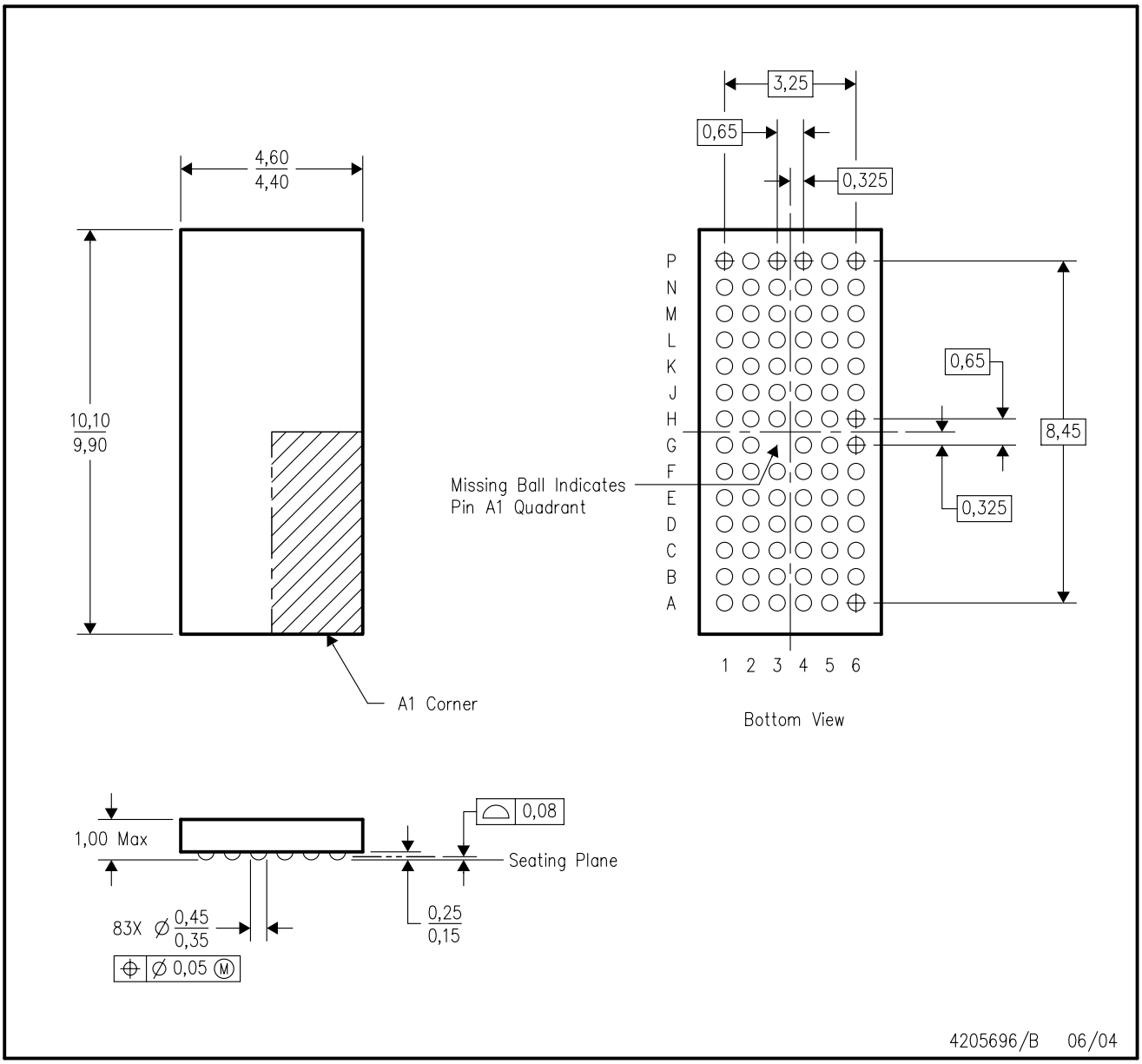

NOTES:
A. All linear dimensions are in millimeters.
B. This drawing is subject to change without notice.
C. JEDEC MO–225 registration is pending.
D. This package is lead–free. Refer to the 83 GRG package (drawing 4205581) for tin–lead (SnPb).

IMPORTANT NOTICE

Texas Instruments Incorporated and its subsidiaries (TI) reserve the right to make corrections, modifications, enhancements, improvements, and other changes to its products and services at any time and to discontinue any product or service without notice. Customers should obtain the latest relevant information before placing orders and should verify that such information is current and complete. All products are sold subject to TI's terms and conditions of sale supplied at the time of order acknowledgment.

TI warrants performance of its hardware products to the specifications applicable at the time of sale in accordance with TI's standard warranty. Testing and other quality control techniques are used to the extent TI deems necessary to support this warranty. Except where mandated by government requirements, testing of all parameters of each product is not necessarily performed.

TI assumes no liability for applications assistance or customer product design. Customers are responsible for their products and applications using TI components. To minimize the risks associated with customer products and applications, customers should provide adequate design and operating safeguards.

TI does not warrant or represent that any license, either express or implied, is granted under any TI patent right, copyright, mask work right, or other TI intellectual property right relating to any combination, machine, or process in which TI products or services are used. Information published by TI regarding third-party products or services does not constitute a license from TI to use such products or services or a warranty or endorsement thereof. Use of such information may require a license from a third party under the patents or other intellectual property of the third party, or a license from TI under the patents or other intellectual property of TI.

Reproduction of TI information in TI data books or data sheets is permissible only if reproduction is without alteration and is accompanied by all associated warranties, conditions, limitations, and notices. Reproduction of this information with alteration is an unfair and deceptive business practice. TI is not responsible or liable for such altered documentation. Information of third parties may be subject to additional restrictions.

Resale of TI products or services with statements different from or beyond the parameters stated by TI for that product or service voids all express and any implied warranties for the associated TI product or service and is an unfair and deceptive business practice. TI is not responsible or liable for any such statements.

TI products are not authorized for use in safety-critical applications (such as life support) where a failure of the TI product would reasonably be expected to cause severe personal injury or death, unless officers of the parties have executed an agreement specifically governing such use. Buyers represent that they have all necessary expertise in the safety and regulatory ramifications of their applications, and acknowledge and agree that they are solely responsible for all legal, regulatory and safety-related requirements concerning their products and any use of TI products in such safety-critical applications, notwithstanding any applications-related information or support that may be provided by TI. Further, Buyers must fully indemnify TI and its representatives against any damages arising out of the use of TI products in such safety-critical applications.

TI products are neither designed nor intended for use in military/aerospace applications or environments unless the TI products are specifically designated by TI as military-grade or "enhanced plastic." Only products designated by TI as military-grade meet military specifications. Buyers acknowledge and agree that any such use of TI products which TI has not designated as military-grade is solely at the Buyer's risk, and that they are solely responsible for compliance with all legal and regulatory requirements in connection with such use.

TI products are neither designed nor intended for use in automotive applications or environments unless the specific TI products are designated by TI as compliant with ISO/TS 16949 requirements. Buyers acknowledge and agree that, if they use any non-designated products in automotive applications, TI will not be responsible for any failure to meet such requirements.

Following are URLs where you can obtain information on other Texas Instruments products and application solutions:

Products		**Applications**	
Amplifiers	amplifier.ti.com	Audio	www.ti.com/audio
Data Converters	dataconverter.ti.com	Automotive	www.ti.com/automotive
DLP® Products	www.dlp.com	Communications and Telecom	www.ti.com/communications
DSP	dsp.ti.com	Computers and Peripherals	www.ti.com/computers
Clocks and Timers	www.ti.com/clocks	Consumer Electronics	www.ti.com/consumer-apps
Interface	interface.ti.com	Energy	www.ti.com/energy
Logic	logic.ti.com	Industrial	www.ti.com/industrial
Power Mgmt	power.ti.com	Medical	www.ti.com/medical
Microcontrollers	microcontroller.ti.com	Security	www.ti.com/security
RFID	www.ti-rfid.com	Space, Avionics & Defense	www.ti.com/space-avionics-defense
RF/IF and ZigBee® Solutions	www.ti.com/lprf	Video and Imaging	www.ti.com/video
		Wireless	www.ti.com/wireless-apps

Mailing Address: Texas Instruments, Post Office Box 655303, Dallas, Texas 75265
Copyright © 2010, Texas Instruments Incorporated