- **Member of the Texas Instruments *Widebus*™ Family**
- ***EPIC*™ (Enhanced-Performance Implanted CMOS) Submicron Process**
- **Ideal for Use in PC100 Register DIMM Revision 1.1**
- **Output Port Has Equivalent 26-Ω Series Resistors, So No External Resistors Are Required**
- **ESD Protection Exceeds 2000 V Per MIL-STD-883, Method 3015; Exceeds 200 V Using Machine Model (C = 200 pF, R = 0)**
- **Latch-Up Performance Exceeds 250 mA Per JESD 17**
- **Package Options Include Plastic Shrink Small-Outline (DL), Thin Shrink Small-Outline (DGG), and Thin Very Small-Outline (DGV) Packages**

DGG, DGV, OR DL PACKAGE
(TOP VIEW)

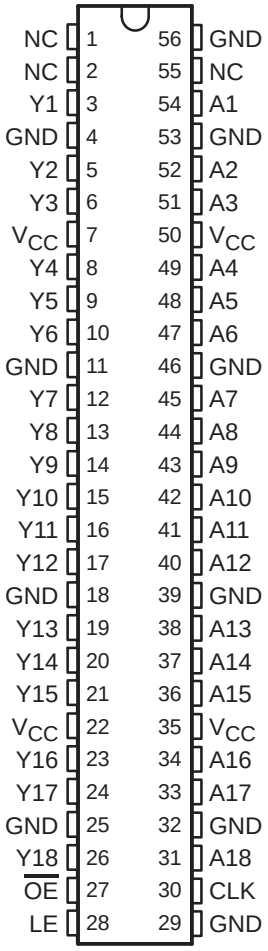

NC – No internal connection

description

This 18-bit universal bus driver is designed for 1.65-V to 3.6-V V_{CC} operation.

Data flow from A to Y is controlled by the output-enable ($\overline{OE}$) input. The device operates in the transparent mode when the latch-enable (LE) input is high. When LE is low, the A data is latched if the clock (CLK) input is held at a high or low logic level. If LE is low, the A data is stored in the latch/flip-flop on the low-to-high transition of CLK. When $\overline{OE}$ is high, the outputs are in the high-impedance state.

To ensure the high-impedance state during power up or power down, $\overline{OE}$ should be tied to V_{CC} through a pullup resistor; the minimum value of the resistor is determined by the current-sinking capability of the driver.

The output port includes equivalent 26-Ω series resistors to reduce overshoot and undershoot.

The SN74ALVC162835 is characterized for operation from –40°C to 85°C.

Please be aware that an important notice concerning availability, standard warranty, and use in critical applications of Texas Instruments semiconductor products and disclaimers thereto appears at the end of this data sheet.

EPIC and Widebus are trademarks of Texas Instruments Incorporated.

PRODUCTION DATA information is current as of publication date. Products conform to specifications per the terms of Texas Instruments standard warranty. Production processing does not necessarily include testing of all parameters.

Copyright © 1999, Texas Instruments Incorporated

FUNCTION TABLE

INPUTS				OUTPUT
$\overline{OE}$	LE	CLK	A	Y
H	X	X	X	Z
L	H	X	L	L
L	H	X	H	H
L	L	↑	L	L
L	L	↑	H	H
L	L	L or H	X	Y_0†

† Output level before the indicated steady-state input conditions were established

logic symbol‡

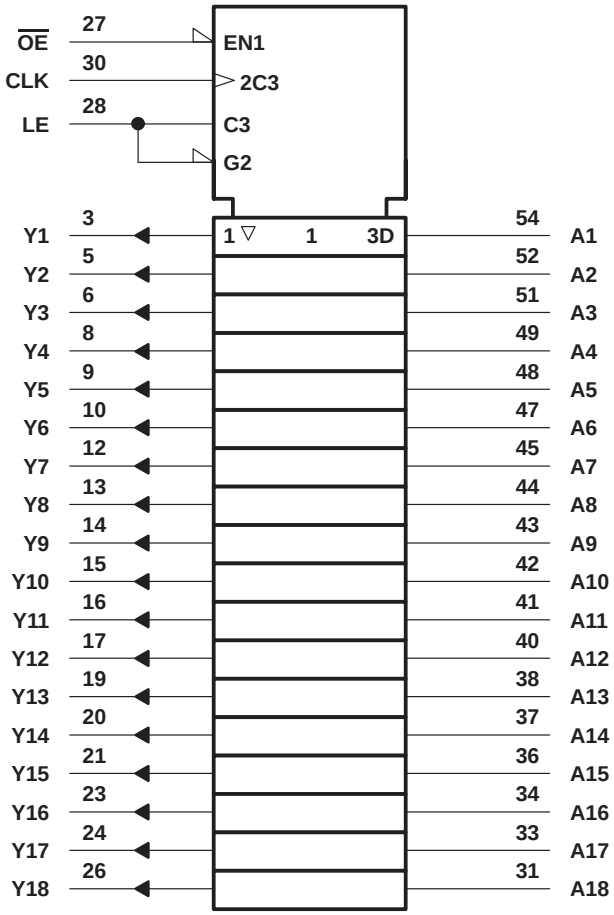

‡ This symbol is in accordance with ANSI/IEEE Std 91-1984 and IEC Publication 617-12.

logic diagram (positive logic)

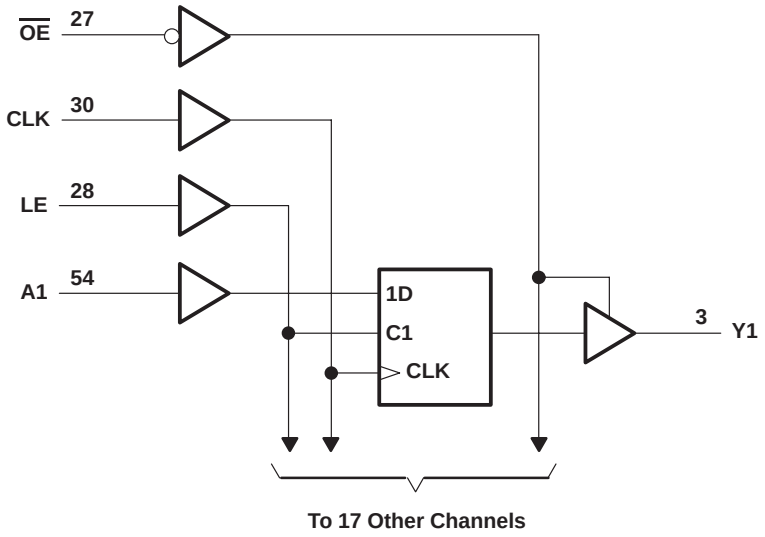

absolute maximum ratings over operating free-air temperature range (unless otherwise noted)†

Supply voltage range, V_{CC} . . . . . –0.5 V to 4.6 V
Input voltage range, V_I (see Note 1) . . . . . –0.5 V to 4.6 V
Output voltage range, V_O (see Notes 1 and 2) . . . . . –0.5 V to V_{CC} + 0.5 V
Input clamp current, I_{IK} (V_I < 0) . . . . . –50 mA
Output clamp current, I_{OK} (V_O < 0) . . . . . –50 mA
Continuous output current, I_O . . . . . ±50 mA
Continuous current through each V_{CC} or GND . . . . . ±100 mA
Package thermal impedance, θ_{JA} (see Note 3): DGG package . . . . . 81°C/W
DGV package . . . . . 86°C/W
DL package . . . . . 74°C/W
Storage temperature range, T_{stg} . . . . . –65°C to 150°C

† Stresses beyond those listed under “absolute maximum ratings” may cause permanent damage to the device. These are stress ratings only, and functional operation of the device at these or any other conditions beyond those indicated under “recommended operating conditions” is not implied. Exposure to absolute-maximum-rated conditions for extended periods may affect device reliability.

NOTES: 1. The input negative-voltage and output voltage ratings may be exceeded if the input and output current ratings are observed.
2. This value is limited to 4.6 V maximum.
3. The package thermal impedance is calculated in accordance with JESD 51.

recommended operating conditions (see Note 4)

			MIN	MAX	UNIT
V_{CC}	Supply voltage		1.65	3.6	V
V_{IH}	High-level input voltage	V_{CC} = 1.65 V to 1.95 V	$0.65 \times V_{CC}$		V
		V_{CC} = 2.3 V to 2.7 V	1.7		
		V_{CC} = 2.7 V to 3.6 V	2		
V_{IL}	Low-level input voltage	V_{CC} = 1.65 V to 1.95 V		$0.35 \times V_{CC}$	V
		V_{CC} = 2.3 V to 2.7 V		0.7	
		V_{CC} = 2.7 V to 3.6 V		0.8	
V_I	Input voltage		0	V_{CC}	V
V_O	Output voltage		0	V_{CC}	V
I_{OH}	High-level output current	V_{CC} = 1.65 V		–2	mA
		V_{CC} = 2.3 V		–6	
		V_{CC} = 2.7 V		–8	
		V_{CC} = 3 V		–12	
I_{OL}	Low-level output current	V_{CC} = 1.65 V		2	mA
		V_{CC} = 2.3 V		6	
		V_{CC} = 2.7 V		8	
		V_{CC} = 3 V		12	
$\Delta t/\Delta v$	Input transition rise or fall rate			10	ns/V
T_A	Operating free-air temperature		–40	85	°C

NOTE 4: All unused inputs of the device must be held at V_{CC} or GND to ensure proper device operation. Refer to the TI application report, *Implications of Slow or Floating CMOS Inputs*, literature number SCBA004.

electrical characteristics over recommended operating free-air temperature range (unless otherwise noted)

PARAMETER		TEST CONDITIONS		V_{CC}	MIN	TYP†	MAX	UNIT
V_{OH}		I_{OH} = –100 μA		1.65 V to 3.6 V	V_{CC}–0.2			V
		I_{OH} = –2 mA		1.65 V	1.2			
		I_{OH} = –4 mA		2.3 V	1.9			
		I_{OH} = –6 mA		2.3 V	1.7			
				3 V	2.4			
		I_{OH} = –8 mA		2.7 V	2			
		I_{OH} = –12 mA		3 V	2			
V_{OL}		I_{OL} = 100 μA		1.65 V to 3.6 V			0.2	V
		I_{OL} = 2 mA		1.65 V			0.45	
		I_{OL} = 4 mA		2.3 V			0.4	
		I_{OL} = 6 mA		2.3 V			0.55	
				3 V			0.55	
		I_{OL} = 8 mA		2.7 V			0.6	
		I_{OL} = 12 mA		3 V			0.8	
I_I		$V_I = V_{CC}$ or GND		3.6 V			±5	μA
I_{OZ}		$V_O = V_{CC}$ or GND		3.6 V			±10	μA
I_{CC}		$V_I = V_{CC}$ or GND,	I_O = 0	3.6 V			40	μA
ΔI_{CC}		One input at V_{CC} – 0.6 V,	Other inputs at V_{CC} or GND	3 V to 3.6 V			750	μA
C_i	Control inputs	$V_I = V_{CC}$ or GND		3.3 V		3.5		pF
	Data inputs					5		
C_o	Outputs	$V_O = V_{CC}$ or GND		3.3 V		7		pF

† All typical values are at V_{CC} = 3.3 V, T_A = 25°C.

timing requirements over recommended operating free-air temperature range (unless otherwise noted) (see Figures 1 through 3)

				V_{CC} = 1.8 V		V_{CC} = 2.5 V ± 0.2 V		V_{CC} = 2.7 V		V_{CC} = 3.3 V ± 0.3 V		UNIT
				MIN	MAX	MIN	MAX	MIN	MAX	MIN	MAX	
f_{clock}	Clock frequency				‡		150		150		150	MHz
t_w	Pulse duration	LE high		‡		3.3		3.3		3.3		ns
		CLK high or low		‡		3.3		3.3		3.3		
t_{su}	Setup time	Data before CLK↑		‡		2.2		2.1		1.7		ns
		Data before LE↓	CLK high	‡		1.9		1.6		1.5		
			CLK low	‡		1.3		1.1		1		
t_h	Hold time	Data after CLK↑		‡		0.6		0.6		0.7		ns
		Data after LE↓	CLK high or low	‡		1.4		1.7		1.4		

‡ This information was not available at the time of publication.

switching characteristics over recommended operating free-air temperature range (unless otherwise noted) (see Figures 1 through 3)

PARAMETER	FROM (INPUT)	TO (OUTPUT)	V_{CC} = 1.8 V		V_{CC} = 2.5 V ± 0.2 V		V_{CC} = 2.7 V		V_{CC} = 3.3 V ± 0.3 V		UNIT
			MIN	TYP	MIN	MAX	MIN	MAX	MIN	MAX	
f_{max}			†		150		150		150		MHz
t_{pd}	A	Y		†	1	5		5	1	4.2	ns
	LE			†	1.3	5.9		5.8	1.3	5.1	
	CLK			†	1.4	6.3		6.1	1.4	5.4	
t_{en}	$\overline{OE}$	Y		†	1.4	6.3		6.5	1.1	5.5	ns
t_{dis}	$\overline{OE}$	Y		†	1	4.9		4.9	1.3	4.5	ns

† This information was not available at the time of publication.

switching characteristics from 0°C to 85°C, C_L = 0 pF

PARAMETER	FROM (INPUT)	TO (OUTPUT)	V_{CC} = 3.3 V ± 0.15 V		UNIT
			MIN	MAX	
t_{pd}‡	A	Y	0.9	2	ns
	CLK	Y	1.4	2.9	ns

‡ Texas Instruments SPICE simulation data

switching characteristics from 0°C to 65°C, C_L = 50 pF

PARAMETER	FROM (INPUT)	TO (OUTPUT)	V_{CC} = 3.3 V ± 0.15 V		UNIT
			MIN	MAX	
t_{pd}	A	Y	1	4	ns
	CLK	Y	1.9	5	ns

operating characteristics, T_A = 25°C

PARAMETER		TEST CONDITIONS	V_{CC} = 1.8 V	V_{CC} = 2.5 V	V_{CC} = 3.3 V	UNIT
			TYP	TYP	TYP	
C_{pd} Power dissipation capacitance	Outputs enabled	C_L = 0, f = 10 MHz	†	35.5	40	pF
	Outputs disabled		†	12.5	14	

† This information was not available at the time of publication.

PARAMETER MEASUREMENT INFORMATION
V_{CC} = 1.8 V

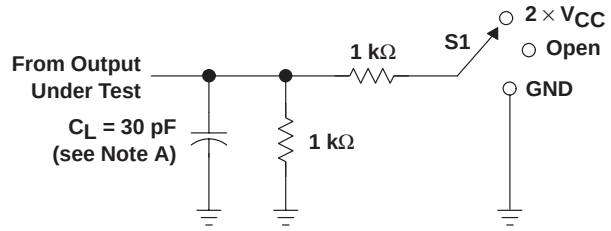

TEST	S1
t_{pd}	Open
t_{PLZ}/t_{PZL}	2 × V_{CC}
t_{PHZ}/t_{PZH}	GND

LOAD CIRCUIT

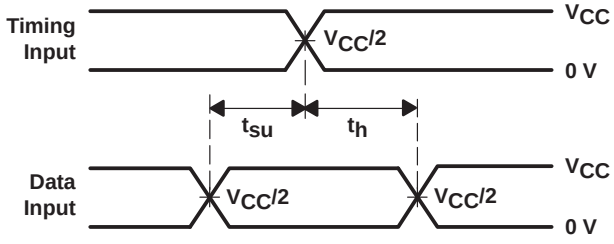

VOLTAGE WAVEFORMS
SETUP AND HOLD TIMES

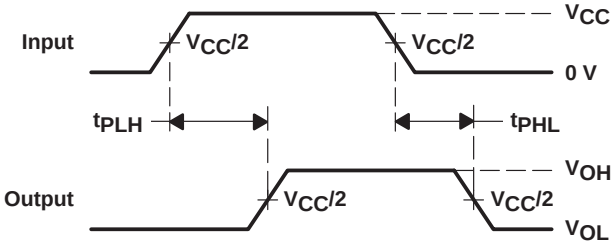

VOLTAGE WAVEFORMS
PROPAGATION DELAY TIMES

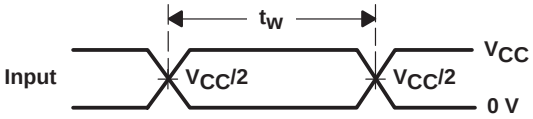

VOLTAGE WAVEFORMS
PULSE DURATION

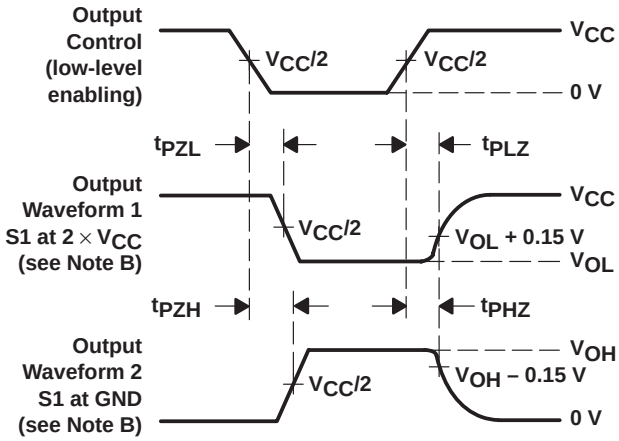

VOLTAGE WAVEFORMS
ENABLE AND DISABLE TIMES

NOTES: A. C_L includes probe and jig capacitance.
B. Waveform 1 is for an output with internal conditions such that the output is low except when disabled by the output control. Waveform 2 is for an output with internal conditions such that the output is high except when disabled by the output control.
C. All input pulses are supplied by generators having the following characteristics: PRR ≤ 10 MHz, Z_O = 50 Ω, t_r ≤ 2 ns, t_f ≤ 2 ns.
D. The outputs are measured one at a time with one transition per measurement.
E. t_{PLZ} and t_{PHZ} are the same as t_{dis}.
F. t_{PZL} and t_{PZH} are the same as t_{en}.
G. t_{PLH} and t_{PHL} are the same as t_{pd}.

Figure 1. Load Circuit and Voltage Waveforms

PARAMETER MEASUREMENT INFORMATION
V_{CC} = 2.5 V ± 0.2 V

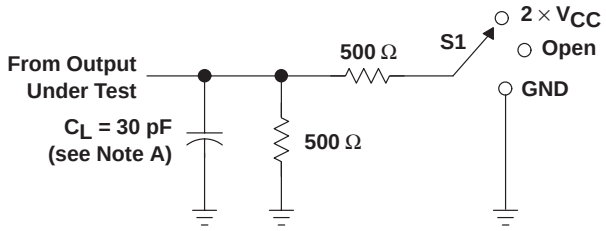

TEST	S1
t_{pd} t_{PLZ}/t_{PZL} t_{PHZ}/t_{PZH}	Open 2 × V_{CC} GND

LOAD CIRCUIT

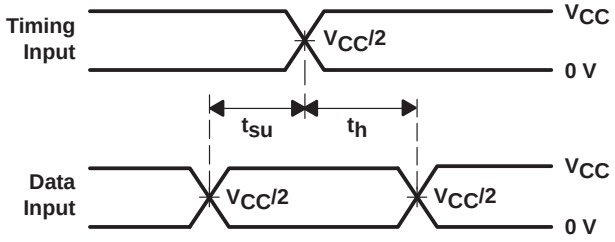

VOLTAGE WAVEFORMS
SETUP AND HOLD TIMES

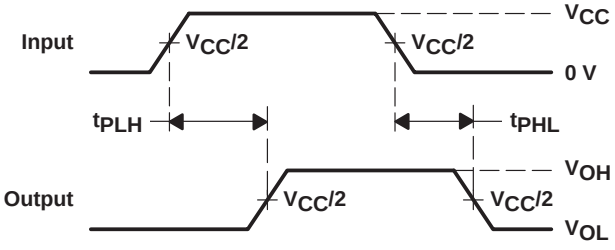

VOLTAGE WAVEFORMS
PROPAGATION DELAY TIMES

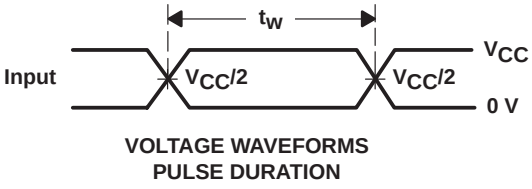

VOLTAGE WAVEFORMS
PULSE DURATION

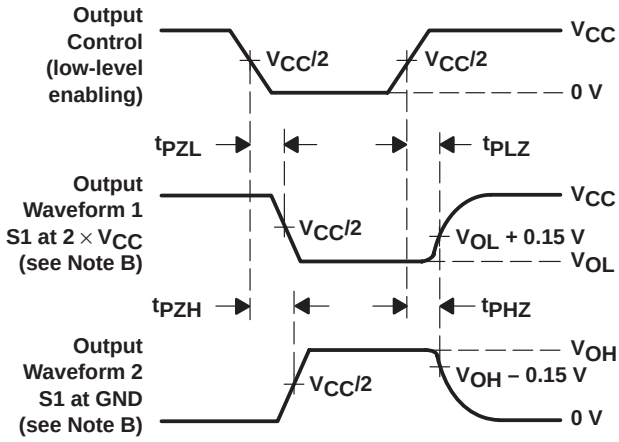

VOLTAGE WAVEFORMS
ENABLE AND DISABLE TIMES

NOTES: A. C_L includes probe and jig capacitance.
B. Waveform 1 is for an output with internal conditions such that the output is low except when disabled by the output control. Waveform 2 is for an output with internal conditions such that the output is high except when disabled by the output control.
C. All input pulses are supplied by generators having the following characteristics: PRR ≤ 10 MHz, Z_O = 50 Ω, t_r ≤ 2 ns, t_f ≤ 2 ns.
D. The outputs are measured one at a time with one transition per measurement.
E. t_{PLZ} and t_{PHZ} are the same as t_{dis}.
F. t_{PZL} and t_{PZH} are the same as t_{en}.
G. t_{PLH} and t_{PHL} are the same as t_{pd}.

Figure 2. Load Circuit and Voltage Waveforms

PARAMETER MEASUREMENT INFORMATION
V_{CC} = 2.7 V AND 3.3 V ± 0.3 V

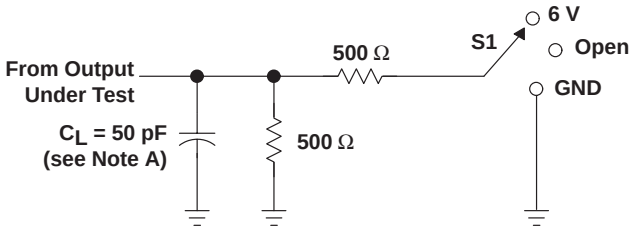

TEST	S1
t_{pd}	Open
t_{PLZ}/t_{PZL}	6 V
t_{PHZ}/t_{PZH}	GND

LOAD CIRCUIT

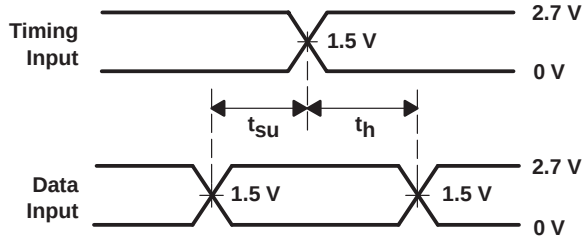

VOLTAGE WAVEFORMS
SETUP AND HOLD TIMES

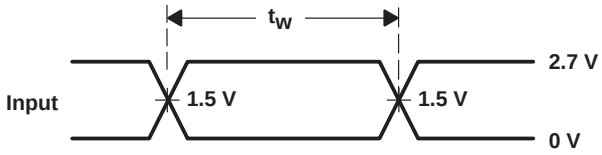

VOLTAGE WAVEFORMS
PULSE DURATION

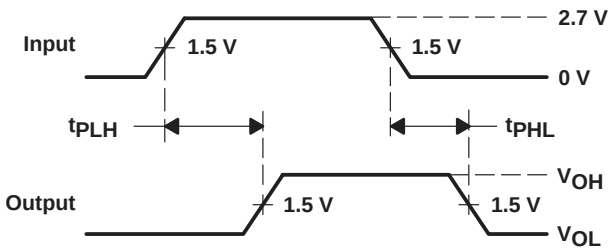

VOLTAGE WAVEFORMS
PROPAGATION DELAY TIMES

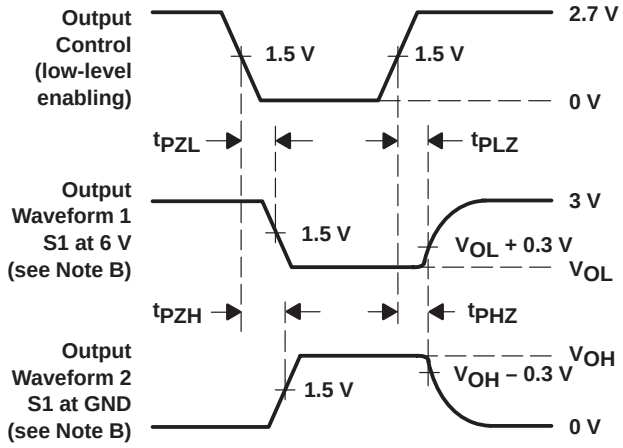

VOLTAGE WAVEFORMS
ENABLE AND DISABLE TIMES

NOTES: A. C_L includes probe and jig capacitance.
B. Waveform 1 is for an output with internal conditions such that the output is low except when disabled by the output control. Waveform 2 is for an output with internal conditions such that the output is high except when disabled by the output control.
C. All input pulses are supplied by generators having the following characteristics: PRR ≤ 10 MHz, Z_O = 50 Ω, t_r ≤ 2.5 ns, t_f ≤ 2.5 ns.
D. The outputs are measured one at a time with one transition per measurement.
E. t_{PLZ} and t_{PHZ} are the same as t_{dis}.
F. t_{PZL} and t_{PZH} are the same as t_{en}.
G. t_{PLH} and t_{PHL} are the same as t_{pd}.

Figure 3. Load Circuit and Voltage Waveforms

TYPICAL CHARACTERISTICS

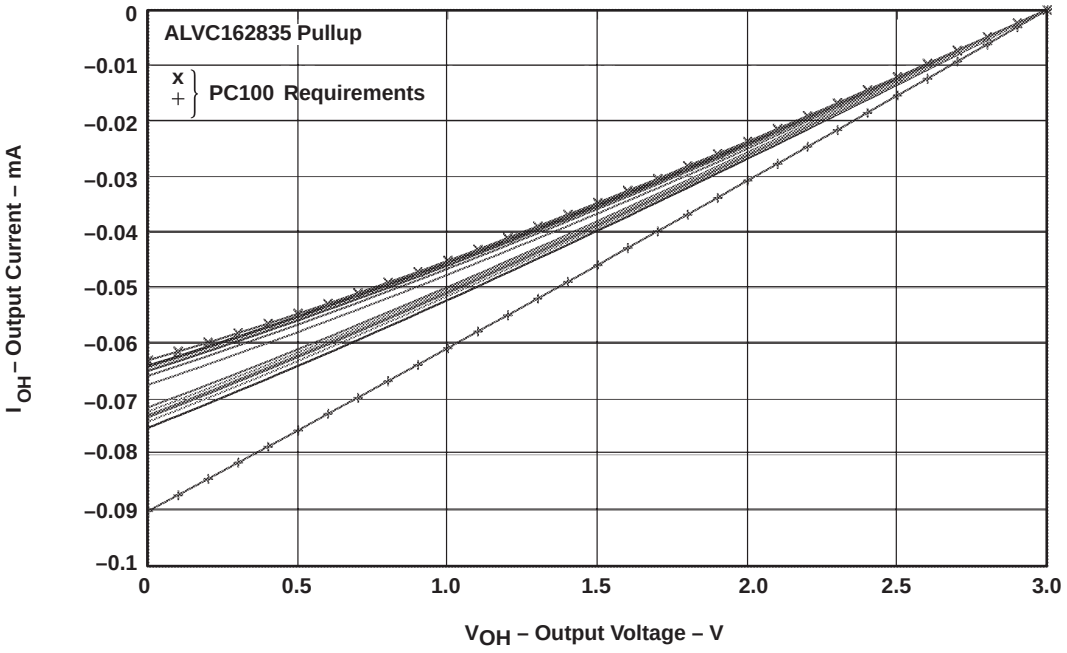

Figure 4. IV Characteristics – Pullup

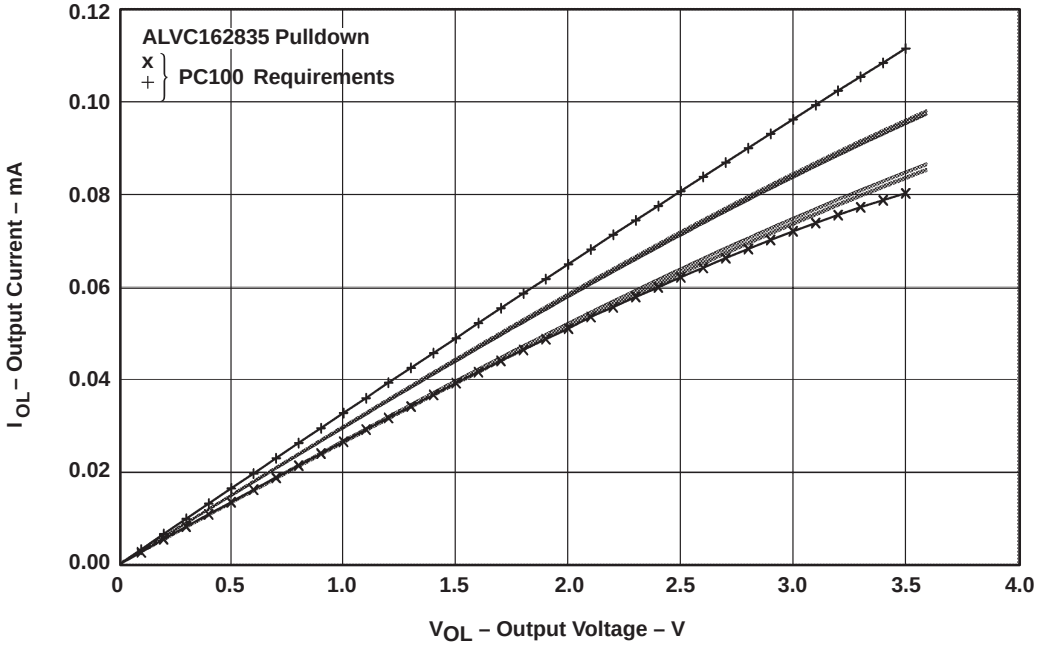

Figure 5. IV Characteristics – Pulldown

IMPORTANT NOTICE

Texas Instruments and its subsidiaries (TI) reserve the right to make changes to their products or to discontinue any product or service without notice, and advise customers to obtain the latest version of relevant information to verify, before placing orders, that information being relied on is current and complete. All products are sold subject to the terms and conditions of sale supplied at the time of order acknowledgement, including those pertaining to warranty, patent infringement, and limitation of liability.

TI warrants performance of its semiconductor products to the specifications applicable at the time of sale in accordance with TI's standard warranty. Testing and other quality control techniques are utilized to the extent TI deems necessary to support this warranty. Specific testing of all parameters of each device is not necessarily performed, except those mandated by government requirements.

CERTAIN APPLICATIONS USING SEMICONDUCTOR PRODUCTS MAY INVOLVE POTENTIAL RISKS OF DEATH, PERSONAL INJURY, OR SEVERE PROPERTY OR ENVIRONMENTAL DAMAGE ("CRITICAL APPLICATIONS"). TI SEMICONDUCTOR PRODUCTS ARE NOT DESIGNED, AUTHORIZED, OR WARRANTED TO BE SUITABLE FOR USE IN LIFE-SUPPORT DEVICES OR SYSTEMS OR OTHER CRITICAL APPLICATIONS. INCLUSION OF TI PRODUCTS IN SUCH APPLICATIONS IS UNDERSTOOD TO BE FULLY AT THE CUSTOMER'S RISK.

In order to minimize risks associated with the customer's applications, adequate design and operating safeguards must be provided by the customer to minimize inherent or procedural hazards.

TI assumes no liability for applications assistance or customer product design. TI does not warrant or represent that any license, either express or implied, is granted under any patent right, copyright, mask work right, or other intellectual property right of TI covering or relating to any combination, machine, or process in which such semiconductor products or services might be or are used. TI's publication of information regarding any third party's products or services does not constitute TI's approval, warranty or endorsement thereof.

Copyright © 1999, Texas Instruments Incorporated