SN5453, SN7453
EXPANDABLE 4-WIDE AND-OR-INVERT GATES

SDLS114

DECEMBER 1983 – REVISED MARCH 1988

- **Package Options Include Plastic and Ceramic DIPs and Ceramic Flat Packages**
- **Dependable Texas Instruments Quality and Reliability**

description

These devices are expandable 4-wide AND-OR-INVERT gates. They perform the Boolean function $Y = \overline{AB + CD + EF + GH + X}$ with X = output of SN5460/SN7460.

The SN5453 is characterized for operation over the full military temperature range of −55°C to 125°C. The SN7453 is characterized for operation from 0°C to 70°C.

SN5453 . . . J PACKAGE
SN7453 . . . N PACKAGE
(TOP VIEW)

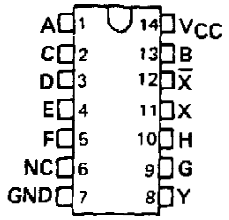

SN5453 . . . W PACKAGE
(TOP VIEW)

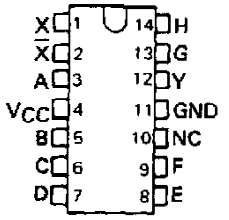

logic symbol†

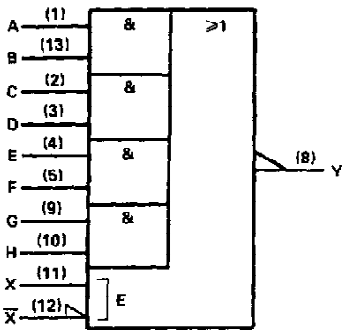

positive logic: $Y = \overline{AB + CD + EF + GH + X}$
X = output of SN5460/SN7460

†This symbol is in accordance with ANSI/IEEE Std 91-1984 and IEC Publication 617-12.
Pin numbers shown are for J and N packages.

logic diagram (positive logic)

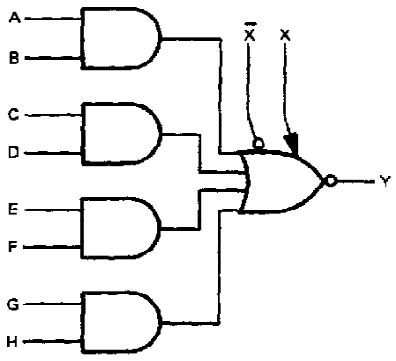

schematic

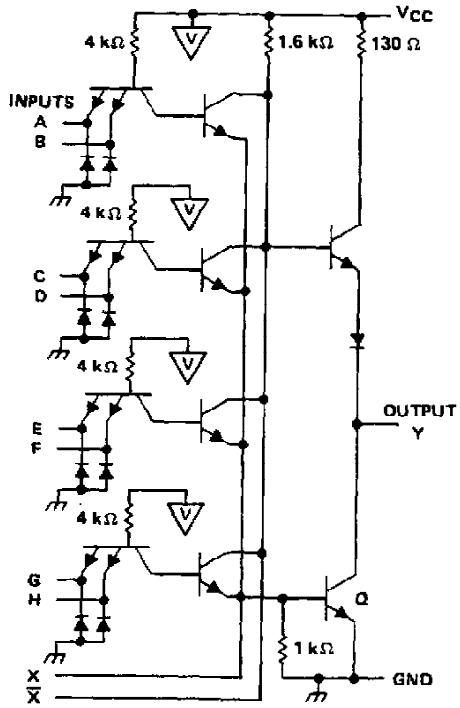

Resistor values shown are nominal.
If expander is not used, leave X and $\overline{X}$ open.

PRODUCTION DATA documents contain information current as of publication date. Products conform to specifications per the terms of Texas Instruments standard warranty. Production processing does not necessarily include testing of all parameters.

TEXAS INSTRUMENTS
POST OFFICE BOX 655012 • DALLAS, TEXAS 75265

absolute maximum ratings over operating free-air temperature range (unless otherwise noted)

Supply voltage, V_{CC} (see Note 1) . . . . . 7 V
Input voltage . . . . . 5.5 V
Operating free-air temperature range: SN5453 . . . . . −55°C to 125°C
SN7453 . . . . . 0°C to 70°C
Storage temperature range . . . . . −65°C to 150°C

NOTE 1: Voltage values are with respect to network ground terminals.

recommended operating conditions

		SN5453			SN7453			UNIT
		MIN	NOM	MAX	MIN	NOM	MAX	
V_{CC}	Supply voltage	4.5	5	5.5	4.75	5	5.25	V
V_{IH}	High-level input voltage	2			2			V
V_{IL}	Low-level input voltage			0.8			0.8	V
I_{OH}	High-level output current			−0.4			−0.4	mA
I_{OL}	Low-level output current			16			16	mA
T_A	Operating free-air temperature	−55		125	0		70	°C

electrical characteristics over recommended operating free-air temperature range (unless otherwise noted)

PARAMETER	TEST CONDITIONS†			SN5453			SN7453			UNIT
				MIN	TYP‡	MAX	MIN	TYP‡	MAX	
V_{IK}	V_{CC} = MIN,	I_I = −12 mA				−1.5			−1.5	V
V_{OH}	V_{CC} = MIN,	V_{IL} = 0.8 V,	I_{OH} = −0.4 mA	2.4	3.4		2.4	3.4		V
V_{OL}	V_{CC} = MIN,	V_{IH} = 2 V,	I_{OL} = 16 mA		0.2	0.4		0.2	0.4	V
I_I	V_{CC} = MAX,	V_I = 5.5 V				1			1	mA
I_{IH}	V_{CC} = MAX,	V_{IH} = 2.4 V				40			40	μA
I_{IL}	V_{CC} = MAX,	V_{IL} = 0.4 V				−1.6			−1.6	mA
I_{OS}§	V_{CC} = MAX			−20		−55	−18		−55	mA
I_{CCH}	V_{CC} = MAX,	V_I = 0 V			4	8		4	8	mA
I_{CCL}	V_{CC} = MAX,	See Note 2			5.1	9.5		5.1	9.5	mA
$I_{\overline{X}}$¶	$V_{\overline{X}X}$ = 0.4 V,	I_{OL} = 16 mA				−2.9			−3.1	mA
$V_{BE(Q)}$¶	$I_X+I_{\overline{X}}$ = 0.41 mA	$R_{\overline{X}X}$ = 0,	I_{OL} = 16 mA			1.1				V
	$I_X+I_{\overline{X}}$ = 0.62 mA,	$R_{\overline{X}X}$ = 0,	I_{OL} = 16 mA						1	
V_{OH}¶	I_X = 0.15 mA,	$I_{\overline{X}}$ = −0.15 mA,	I_{OH} = −0.4 mA	2.4	3.4					V
	I_X = 0.27 mA,	$I_{\overline{X}}$ = −0.27 mA,	I_{OH} = −0.4 mA				2.4	3.4		
V_{OL}¶	$I_X+I_{\overline{X}}$ = 0.3 mA,	$R_{\overline{X}X}$ = 138 Ω,	I_{OL} = 16 mA		0.2	0.4				V
	$I_X+I_{\overline{X}}$ = 0.43 mA,	$R_{\overline{X}X}$ = 130 Ω,	I_{OL} = 16 mA					0.2	0.4	

† For conditions shown as MIN or MAX, use the appropriate value specified under recommended operating conditions.
‡ All typical values are at V_{CC} = 5 V, T_A = 25°C.
§ Not more than one output should be shorted at a time.
¶ Using expander inputs, V_{CC} = MIN, T_A = MIN, except typical values.
NOTE 2: All inputs of one AND gate at 4.5 V, all others at GND.

switching characteristics, V_{CC} = 5 V, T_A = 25°C (see note 3)

PARAMETER	FROM (INPUT)	TO (OUTPUT)	TEST CONDITIONS		MIN	TYP	MAX	UNIT
t_{PLH}	Any	Y	R_L = 400 Ω,	C_L = 15 pF #		13	22	ns
t_{PHL}						8	15	ns

Expander pins open.
NOTE 3: Load circuits and voltage waveforms are shown in Section 1.

IMPORTANT NOTICE

Texas Instruments (TI) reserves the right to make changes to its products or to discontinue any semiconductor product or service without notice, and advises its customers to obtain the latest version of relevant information to verify, before placing orders, that the information being relied on is current.

TI warrants performance of its semiconductor products and related software to the specifications applicable at the time of sale in accordance with TI's standard warranty. Testing and other quality control techniques are utilized to the extent TI deems necessary to support this warranty. Specific testing of all parameters of each device is not necessarily performed, except those mandated by government requirements.

Certain applications using semiconductor products may involve potential risks of death, personal injury, or severe property or environmental damage ("Critical Applications").

TI SEMICONDUCTOR PRODUCTS ARE NOT DESIGNED, INTENDED, AUTHORIZED, OR WARRANTED TO BE SUITABLE FOR USE IN LIFE-SUPPORT APPLICATIONS, DEVICES OR SYSTEMS OR OTHER CRITICAL APPLICATIONS.

Inclusion of TI products in such applications is understood to be fully at the risk of the customer. Use of TI products in such applications requires the written approval of an appropriate TI officer. Questions concerning potential risk applications should be directed to TI through a local SC sales office.

In order to minimize risks associated with the customer's applications, adequate design and operating safeguards should be provided by the customer to minimize inherent or procedural hazards.

TI assumes no liability for applications assistance, customer product design, software performance, or infringement of patents or services described herein. Nor does TI warrant or represent that any license, either express or implied, is granted under any patent right, copyright, mask work right, or other intellectual property right of TI covering or relating to any combination, machine, or process in which such semiconductor products or services might be or are used.

Copyright © 1996, Texas Instruments Incorporated

IMPORTANT NOTICE

Texas Instruments and its subsidiaries (TI) reserve the right to make changes to their products or to discontinue any product or service without notice, and advise customers to obtain the latest version of relevant information to verify, before placing orders, that information being relied on is current and complete. All products are sold subject to the terms and conditions of sale supplied at the time of order acknowledgement, including those pertaining to warranty, patent infringement, and limitation of liability.

TI warrants performance of its semiconductor products to the specifications applicable at the time of sale in accordance with TI's standard warranty. Testing and other quality control techniques are utilized to the extent TI deems necessary to support this warranty. Specific testing of all parameters of each device is not necessarily performed, except those mandated by government requirements.

CERTAIN APPLICATIONS USING SEMICONDUCTOR PRODUCTS MAY INVOLVE POTENTIAL RISKS OF DEATH, PERSONAL INJURY, OR SEVERE PROPERTY OR ENVIRONMENTAL DAMAGE ("CRITICAL APPLICATIONS"). TI SEMICONDUCTOR PRODUCTS ARE NOT DESIGNED, AUTHORIZED, OR WARRANTED TO BE SUITABLE FOR USE IN LIFE-SUPPORT DEVICES OR SYSTEMS OR OTHER CRITICAL APPLICATIONS. INCLUSION OF TI PRODUCTS IN SUCH APPLICATIONS IS UNDERSTOOD TO BE FULLY AT THE CUSTOMER'S RISK.

In order to minimize risks associated with the customer's applications, adequate design and operating safeguards must be provided by the customer to minimize inherent or procedural hazards.

TI assumes no liability for applications assistance or customer product design. TI does not warrant or represent that any license, either express or implied, is granted under any patent right, copyright, mask work right, or other intellectual property right of TI covering or relating to any combination, machine, or process in which such semiconductor products or services might be or are used. TI's publication of information regarding any third party's products or services does not constitute TI's approval, warranty or endorsement thereof.

Copyright © 1998, Texas Instruments Incorporated