SINGLE M-LVDS RECEIVERS

FEATURES

- **Low-Voltage Differential 30-Ω to 55-Ω Line Receivers for Signaling Rates(1) up to 250Mbps; Clock Frequencies up to 125MHz**
- **SN65MLVD2 Type-1 Receiver Incorporates 25 mV of Input Threshold Hysteresis**
- **SN65MLVD3 Type-2 Receiver Provides 100 mV Offset Threshold to Detect Open-Circuit and Idle-Bus Conditions**
- **Wide Receiver Input Common-Mode Voltage Range, –1 V to 3.4 V, Allows 2 V of Ground Noise**
- **Improved V_{IT} (35 mV)**
- **Meets or Exceeds the M-LVDS Standard TIA/EIA-899 for Multipoint Topology**
- **High Input Impedance with Low Supply Voltage**
- **Bus-Pin HBM ESD Protection Exceeds 9 kV**
- **Packaged in 8-Pin SON (DRB) 70% Smaller Than 8-Pin SOIC**

(1) The signaling rate of a line is the number of voltage transitions that are made per second, expressed in the units bps (bits per second).

APPLICATIONS

- **Parallel Multipoint Data and Clock Transmission via Backplanes and Cables**
- **Cellular Base Stations**
- **Central Office Switches**
- **Network Switches and Routers**

PACKAGE AND PIN-OUT

SN65MLVD2DRB
SN65MLVD3DRB
SON-8

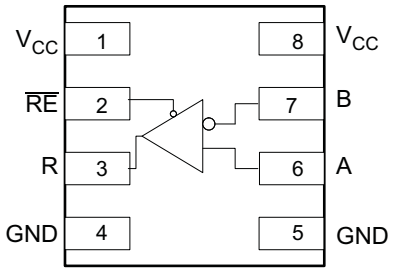

DESCRIPTION

The SN65MLVD2 and SN65MLVD3 are single-channel M-LVDS receivers. These devices are designed in full compliance with the TIA/EIA-899 (M-LVDS) standard, which are optimized to operate at signaling rates up to 250 Mbps. Each receiver channel is controlled by a receive enable ($\overline{RE}$). When $\overline{RE}$ = low, the corresponding channel is enabled; when $\overline{RE}$ = high, the corresponding channel is disabled.

The M-LVDS standard defines two types of receivers, designated as Type-1 and Type-2. Type-1 receivers (SN65MLVD2) have thresholds centered about zero with 25 mV of hysteresis to prevent output oscillations with loss of input; Type-2 receivers (SN65MLVD3) implement a failsafe by using an offset threshold. Receiver outputs are slew rate controlled to reduce EMI and crosstalk effects associated with large current surges.

The devices are characterized for operation from –40°C to 85°C.

Please be aware that an important notice concerning availability, standard warranty, and use in critical applications of Texas Instruments semiconductor products and disclaimers thereto appears at the end of this data sheet.

PRODUCTION DATA information is current as of publication date. Products conform to specifications per the terms of the Texas Instruments standard warranty. Production processing does not necessarily include testing of all parameters.

Copyright © 2006, Texas Instruments Incorporated

TYPICAL APPLICATION

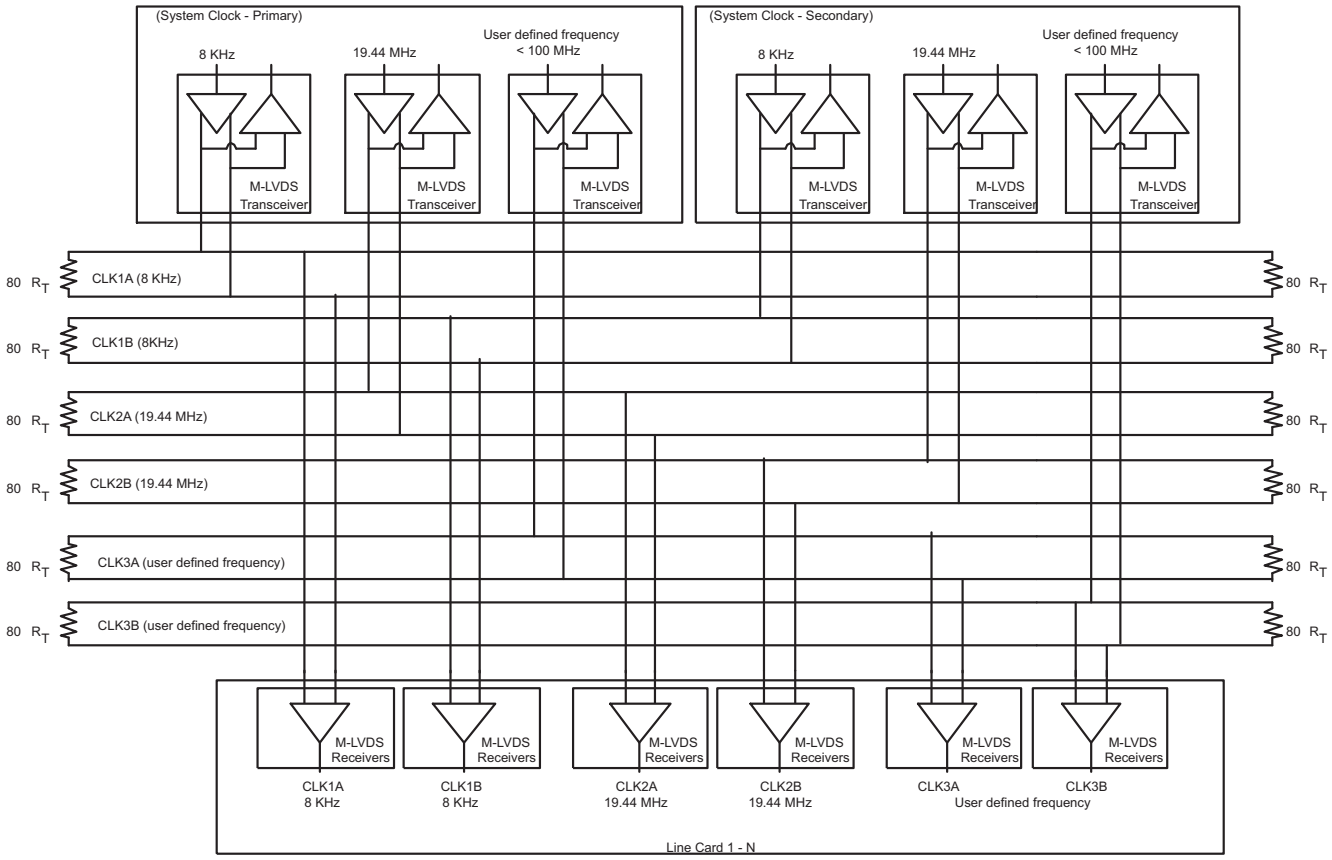

AdvancedTCA Backplane - Synchronized System Clock

These devices have limited built-in ESD protection. The leads should be shorted together or the device placed in conductive foam during storage or handling to prevent electrostatic damage to the MOS gates.

ORDERING INFORMATION(1)

PART NUMBER	FUNCTION	PART MARKING	PACKAGE / CARRIER
SN65MLVD2DRBT	M-LVDS Type 1 Receiver	MF2	8-Pin SON / Small Tape and Reel
SN65MLVD2DRBR	M-LVDS Type 1 Receiver	MF2	8-Pin SON / Tape and Reel
SN65MLVD3DRBT	M-LVDS Type 2 Receiver	MF3	8-Pin SON / Small Tape and Reel
SN65MLVD3DRBR	M-LVDS Type 2 Receiver	MF3	8-Pin SON / Tape and Reel

(1) For the most current package and ordering information, see the Package Option Addendum at the end of this document, or see the TI website at www.ti.com.

ABSOLUTE MAXIMUM RATINGS

over operating free-air temperature range (unless otherwise noted) (1)

				VALUE	UNIT
V_{CC}	Supply voltage range(2)			–0.5 to 4	V
	Input voltage range	$\overline{RE}$		–0.5 to 4	V
		A or B		–1.8 to 4	V
	Output voltage range	R		–0.3 to 4	V
	Electrostatic discharge	Human-body model(3)	All other pins	±7	kV
			A, B	±9	
		Machine model(4)	All pins	±200	V
		Field-induced-charged-device model(5)	All pins	±2	kV
	Continuous power dissipation			See Dissipation Rating Table	

(1) Stresses beyond those listed under *absolute maximum ratings* may cause permanent damage to the device. These are stress ratings only, and functional operation of the device at these or any other conditions beyond those indicated under *recommended operating conditions* is not implied. Exposure to absolute-maximum-rated conditions for extended periods may affect device reliability.
(2) All voltage values, except differential I/O bus voltages, are with respect to network ground terminal.
(3) Tested in accordance with JEDEC Standard 22, Test Method A114-A. Bus pin stressed with respect to a common connection of GND and V_{CC}.
(4) Tested in accordance with JEDEC Standard 22 Test Method A115-A.
(5) Tested in accordance with EIA-JEDEC JESD22-C101C.

PACKAGE DISSIPATION RATINGS(1)

PACKAGE	PCB TYPE	$T_A \leq 25°C$ POWER RATING	DERATING FACTOR(2) ABOVE $T_A = 25°C$	$T_A = 85°C$ POWER RATING
8-SON DRB	Low-K	280 mW	2.80 mW/°C	112 mW
	High-K	662 mW	6.62 mW/°C	264 mW

(1) The thermal dissipations are in the consideration of soldering down the powerPAD without via on each type of boards.
(2) This is the inverse of the junction-to-ambient thermal resistance when board-mounted and with no air flow.

THERMAL CHARACTERISTICS

PARAMETER		TEST CONDITIONS	MIN	TYP	MAX	UNIT
θ_{JB}	Junction-to-board thermal resistance			89		° C/W
θ_{JC}	Junction-to-case thermal resistance			98		° C/W
P_D	Device power dissipation	$\overline{RE}$ at 0 V, C_L = 15 pF, V_{ID} = 400 mV, 125 MHz			90	mW

RECOMMENDED OPERATING CONDITIONS

over operating free-air temperature range (unless otherwise noted)

		MIN	NOM	MAX	UNIT
V_{CC}	Supply voltage	3	3.3	3.6	V
V_{IH}	High-level input voltage	2		V_{CC}	V
V_{IL}	Low-level input voltage	GND		0.8	V
V_A or V_B	Voltage at any bus terminal	–1.4		3.8	V
$\|V_{ID}\|$	Magnitude of differential input voltage	0.035		V_{CC}	V
V_{IC}	Differential common-mode input voltage	–1		3.4	V
R_L	Differential load resistance	30	50		Ω
$1/t_{UI}$	Signaling rate			250	Mbps
T_A	Operating free-air temperature	–40		85	°C

DEVICE ELECTRICAL CHARACTERISTICS

over recommended operating conditions (unless otherwise noted)

PARAMETER		TEST CONDITIONS	MIN	TYP(1)	MAX	UNIT
I_{CC}	Supply current	$\overline{RE}$ at 0 V, C_L = 15 pF, V_{ID} = 400 mV, 125 MHz			25	mA

(1) All typical values are at 25°C and with a 3.3-V supply voltage.

RECEIVER ELECTRICAL CHARACTERISTICS

over recommended operating conditions (unless otherwise noted)

PARAMETER			TEST CONDITIONS	MIN	TYP(1)	MAX	UNIT
V_{IT+}	Positive-going differential input voltage threshold	Type 1	See Figure 1, Table 1 and Table 2			35	mV
		Type 2				135	
$V_{IT–}$	Negative-going differential input voltage threshold	Type 1		–35			mV
		Type 2		65			
V_{HYS}	Differential input voltage hysteresis (V_{IT+} – $V_{IT–}$)	Type 1			25		mV
		Type 2			0		
V_{OH}	High-level output voltage		I_{OH} = –8 mA	2.4			V
V_{OL}	Low-level output voltage		I_{OL} = 8 mA			0.4	V
I_{IH}	High-level input current		V_{IH} = 2 V to V_{CC}	–10			µA
I_{IL}	Low-level input current		V_{IL} = GND to 0.8 V	–10			µA
I_{OZ}	High-impedance output current		V_O = 0 V or V_{CC}	–10		15	µA
I_A or I_B	Receiver input current		One input (V_A or V_B) = –1.4 V or 3.8 V, Other input = 1.2 V	–20		20	µA
I_{AB}	Receiver differential input current (I_A – I_B)		V_A = V_B = –1.4 V or 3.8 V	–4		4	µA
$I_{A(OFF)}$ or $I_{B(OFF)}$	Receiver input current		One input (V_A or V_B) = –1.4 V or 3.8 V, Other input = 1.2 V, V_{CC} = GND or 1.5 V	–20		20	µA
$I_{AB(OFF)}$	Receiver power-off differential input current (I_A – I_B)		V_A = V_B = –1.4 V or 3.8 V, V_{CC} = GND or 1.5 V	–4		4	µA
C_A or C_B	Input capacitance		V_I = 0.4sin(30E6πt) + 0.5V,(2) Other input at 1.2 V		3		pF
C_{AB}	Differential input capacitance		V_{AB} = 0.4sin(30E6πt) + 0.5 V(2)			2.5	pF
$C_{A/B}$	Input capacitance balance, (C_A/C_B)			0.99		1.01	

(1) All typical values are at 25°C and with a 3.3-V supply voltage.
(2) HP4194A impedance analyzer (or equivalent)

RECEIVER SWITCHING CHARACTERISTICS

over recommended operating conditions (unless otherwise noted)

PARAMETER			TEST CONDITIONS	MIN	TYP(1)	MAX	UNIT
t_{PLH}	Propagation delay time, low-to-high-level output		C_L = 15 pF, See Figure 2	2		6	ns
t_{PHL}	Propagation delay time, high-to-low-level output			2		6	ns
t_r	Output signal rise time			1		2.3	
t_f	Output signal fall time			1		2.3	ns
$t_{sk(p)}$	Pulse skew ($\lvert t_{PHL} - t_{PLH} \rvert$)	Type 1			90	210	ps
		Type 2			45	250	
$t_{sk(pp)}$	Part-to-part skew					1	ns
$t_{jit(per)}$	Period jitter, rms (1 standard deviation)(2)		125 MHz clock input			10	ps
$t_{jit(c-c)}$	Cycle-to-cycle jitter, rms(3)		125 MHz clock input(4)			8	ps
$t_{jit(det)}$	Deterministic jitter(2)	Type 1	250 Mbps 2^{15}-1 PRBS input(5)			500	ps
		Type 2				450	ps
$t_{jit(ran)}$	Random jitter(2)	Type 1	250 Mbps 2^{15}-1 PRBS input(5)			8	ps
		Type 2				8	ps
t_{PZH}	Enable time, high-impedance-to-high-level output		C_L = 15 pF, See Figure 3			15	ns
t_{PZL}	Enable time, high-impedance-to-low-level output		C_L = 15 pF, See Figure 3			15	ns
t_{PHZ}	Disable time, high-level-to-high-impedance output		C_L = 15 pF, See Figure 3			10	ns
t_{PLZ}	Disable time, low-level-to-high-impedance output		C_L = 15 pF, See Figure 3			10	ns

(1) All typical values are at 25°C and with a 3.3-V supply voltage.
(2) Jitter measured by triggering off of the input source to track out the associated input jitter.
(3) Stimulus jitter has been subtracted from the numbers.
(4) Measured over 75K samples
(5) Measured over BER = 10^{-6}.

TERMINAL FUNCTIONS

TERMINAL		I/O	DESCRIPTION
NAME	NO.		
A	6	I	M-LVDS Non-inverting input
B	7	I	M-LVDS Inverting input
R	3	O	Data output from receivers
$\overline{RE}$	2	I	Receiver enable, active low, enables all receivers
GND	4, 5		Circuit ground
V_{CC}	1, 8		Supply voltage

DEVICE FUNCTION TABLES

TYPE-1 RECEIVER (SN65MLVD2)		
INPUTS(1)		OUTPUT(1)
$V_{ID} = V_A - V_B$	$\overline{RE}$	R
$V_{ID} \geq 35$ mV	L	H
-35 mV $\leq V_{ID} \leq 35$ mV	L	?
$V_{ID} \leq -35$ mV	L	L
X	H	Z
X	Open	Z
Open Circuit	L	?

TYPE-2 RECEIVER (SN65MLVD3)		
INPUTS(1)		OUTPUT(1)
$V_{ID} = V_A - V_B$	$\overline{RE}$	R
$V_{ID} \geq 135$ mV	L	H
65 mV $\leq V_{ID} \leq 135$ mV	L	?
$V_{ID} \leq 65$ mV	L	L
X	H	Z
X	Open	Z
Open Circuit	L	L

(1) H=high level, L=low level, Z=high impedance, X=Don't care, ?=indeterminate

EQUIVALENT INPUT AND OUTPUT SCHEMATIC DIAGRAMS

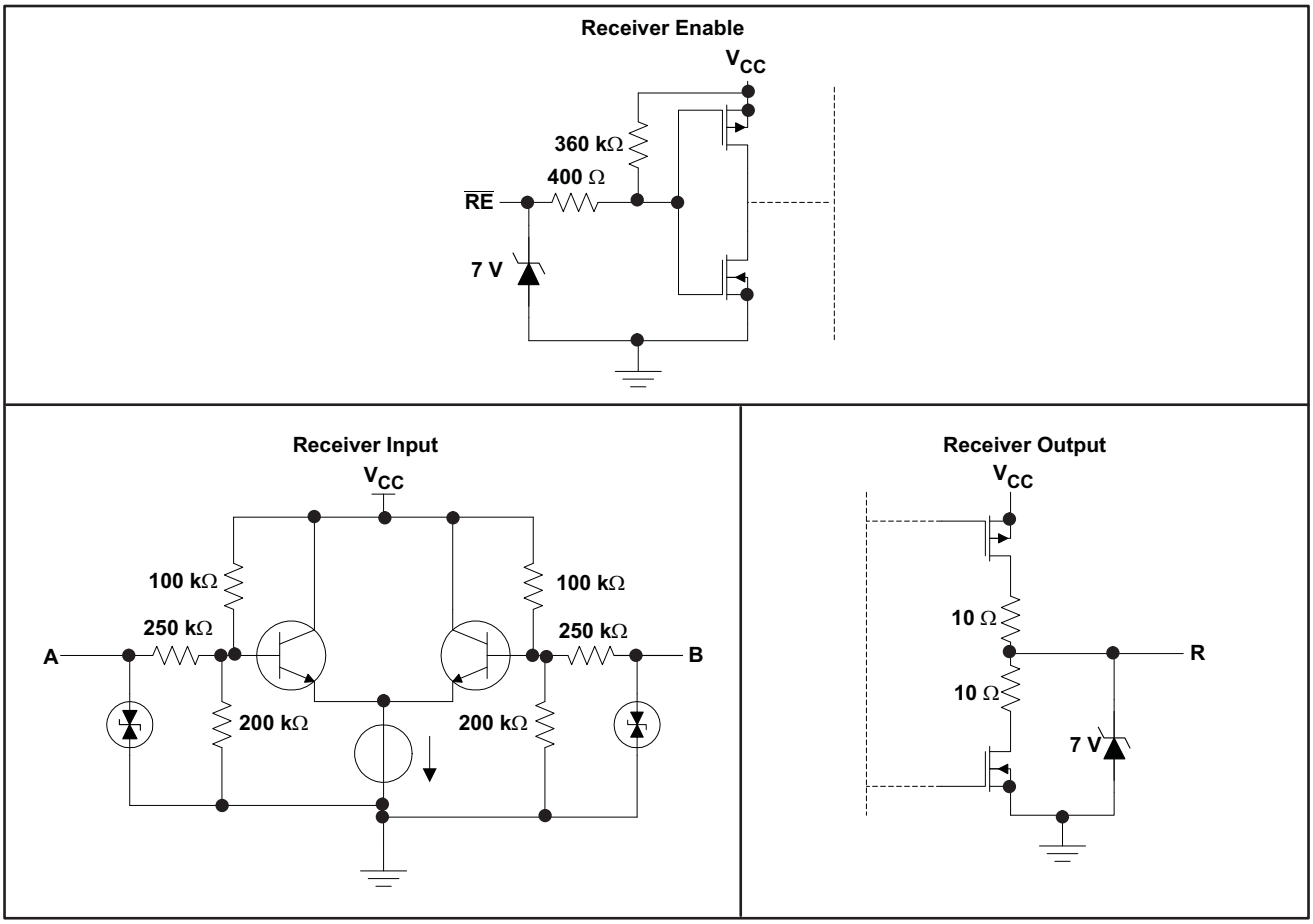

PARAMETER MEASUREMENT INFORMATION

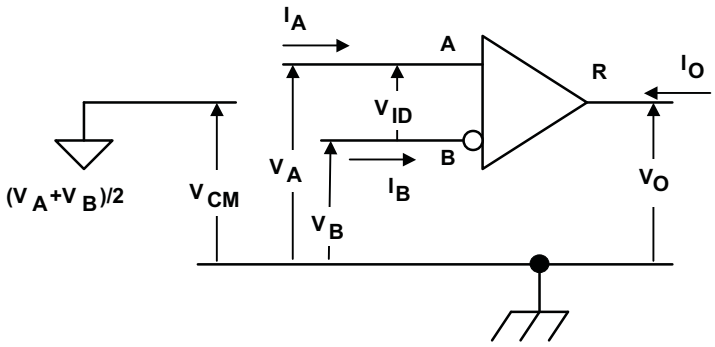

Figure 1. Receiver Voltage and Current Definitions

Table 1. Type-1 Receiver Input Threshold Test Voltages

APPLIED VOLTAGES		RESULTING DIFFERENTIAL INPUT VOLTAGE	RESULTING COMMON-MODE INPUT VOLTAGE	RECEIVER OUTPUT(1)
V_{IA}	V_{IB}	V_{ID}	V_{IC}	
2.400	0.000	2.400	1.200	H
0.000	2.400	– 2.400	1.200	L
3.400	3.365	0.035	3.3825	H
3.365	3.400	– 0.035	3.3825	L
–0.965	–1	0.035	–0.9825	H
–1	–0.965	– 0.035	–0.9825	L

(1) H= high level, L = low level, output state assumes receiver is enabled ($\overline{RE}$ = L)

Table 2. Type-2 Receiver Input Threshold Test Voltages

APPLIED VOLTAGES		RESULTING DIFFERENTIAL INPUT VOLTAGE	RESULTING COMMON-MODE INPUT VOLTAGE	RECEIVER OUTPUT(1)
V_{IA}	V_{IB}	V_{ID}	V_{IC}	
2.400	0.000	2.400	1.200	H
0.000	2.400	– 2.400	1.200	L
3.400	3.265	0.135	3.3325	H
3.4000	3.335	0.065	3.3675	L
–0.865	–1	0.135	–0.9325	H
–0.935	–1	0.065	–0.9675	L

(1) H= high level, L = low level, output state assumes receiver is enabled ($\overline{RE}$ = L)

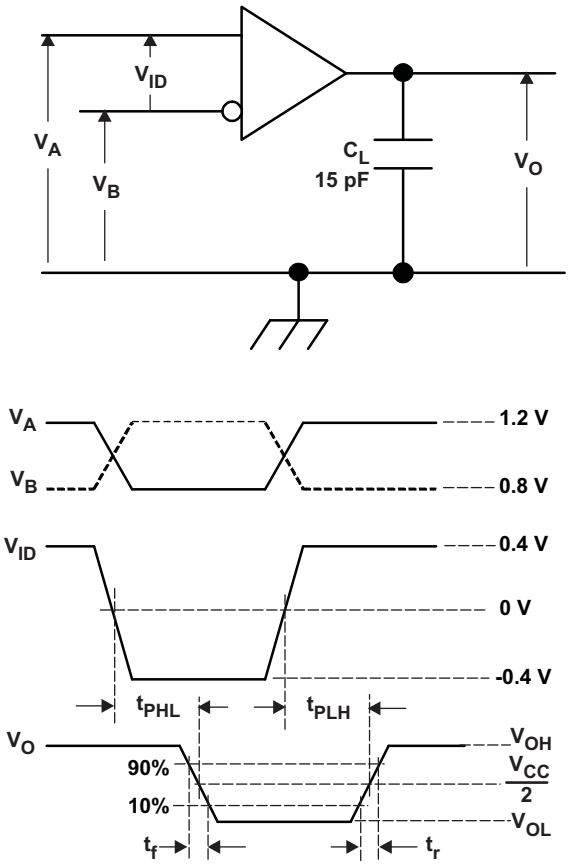

A. All input pulses are supplied by a generator having the following characteristics: t_r or $t_f \leq 1$ ns, Frequency = 1 MHz, duty cycle = 50 ± 5%. C_L is a combination of a 20%-tolerance, low-loss ceramic, surface-mount capacitor and fixture capacitance within 2 cm of the D.U.T.

B. The measurement is made on test equipment with a –3dB bandwidth of at least 1 GHz.

Figure 2. Receiver Timing Test Circuit and Waveforms

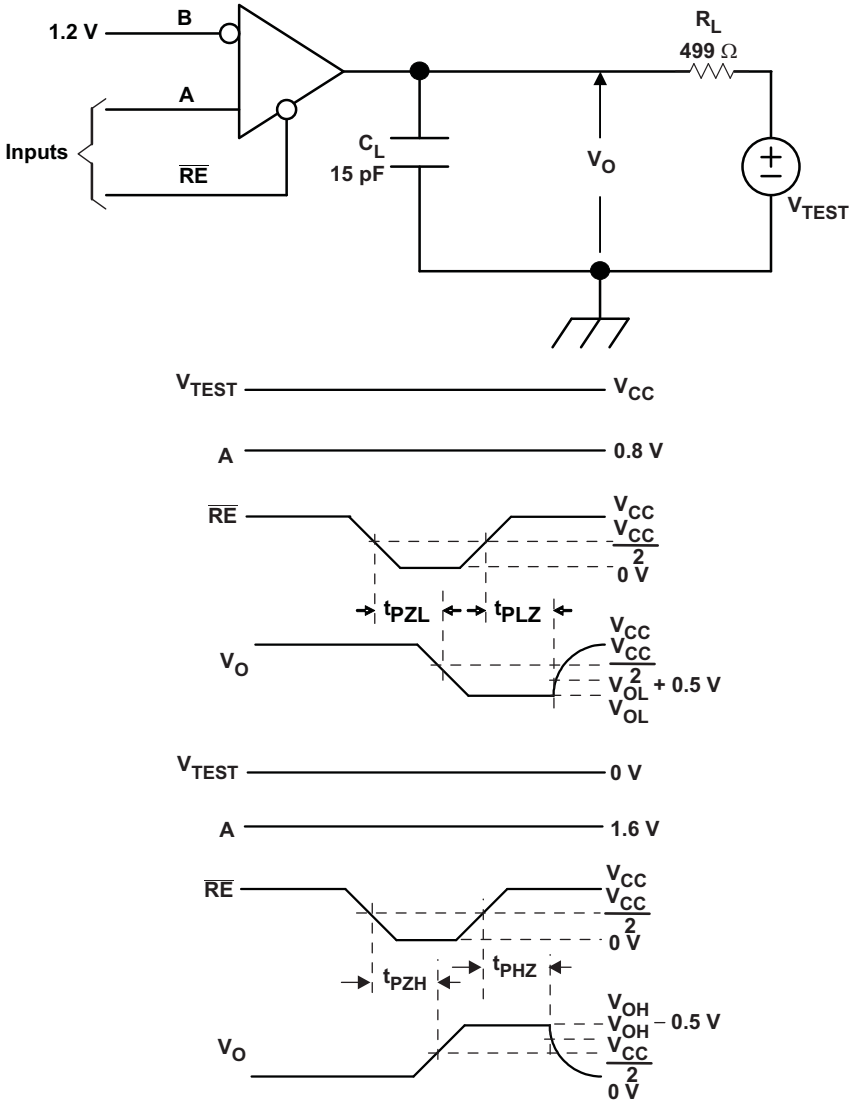

A. All input pulses are supplied by a generator having the following characteristics: t_r or $t_f \leq 1$ ns, frequency = 1 MHz, duty cycle = 50 ± 5%.

B. R_L is 1% tolerance, metal film, surface mount, and located within 2 cm of the D.U.T

C. C_L is the instrumentation and fixture capacitance within 2 cm of the D.U.T. and ±20%. The measurement is made on test equipment with a –3dB bandwidth of at least 1GHz.

Figure 3. Receiver Enable/Disable Time Test Circuit and Waveforms

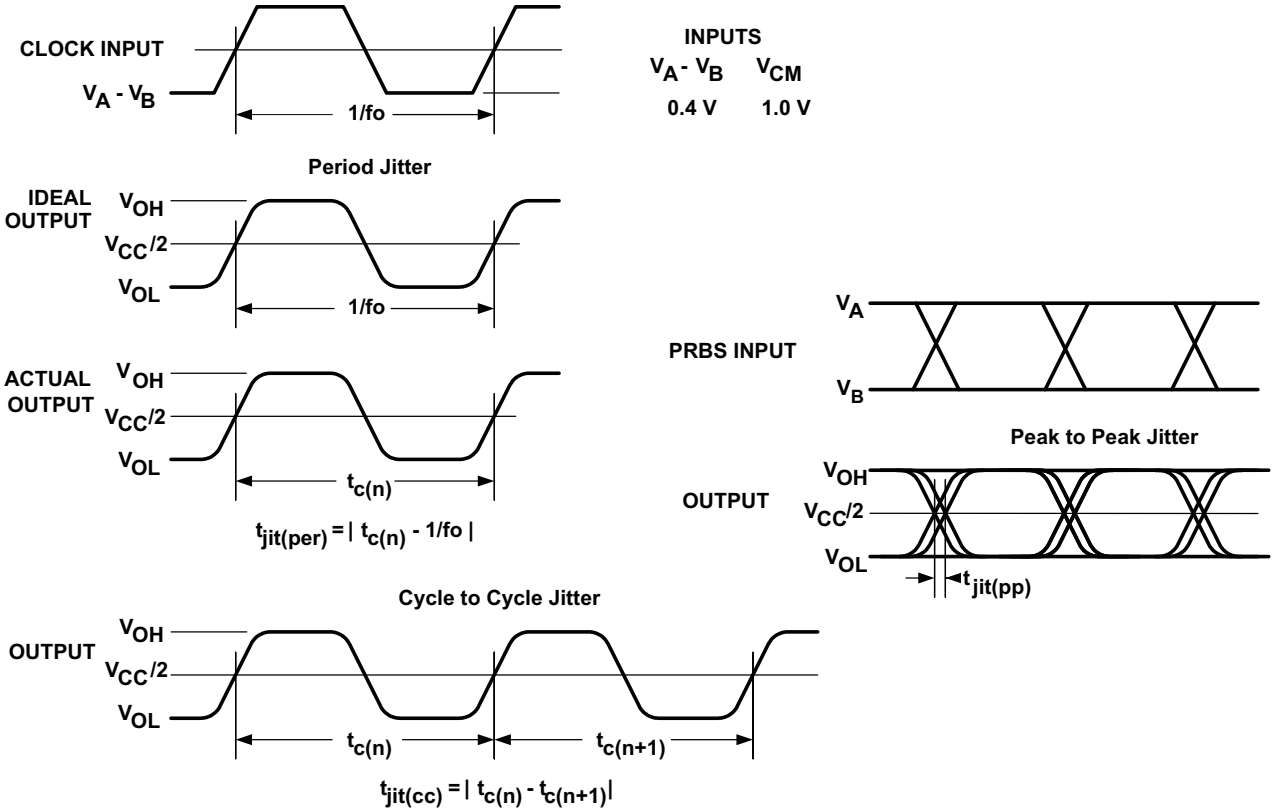

A. All input pulses are supplied by the Agilent 81250 Parallel BERT Stimulus System with plug-in E4832A.

B. The cycle-to-cycle jitter measurement is made on a TEK TDS6604 running TDSJIT3 application software

C. Period jitter is measured using a 125-MHz 50 ± 1% duty cycle clock input.

D. Deterministic jitter and random jitter are measured using a 250-Mbps 2^{15-1} PRBS input

Figure 4. Receiver Jitter Measurement Waveforms

TYPICAL CHARACTERISTICS

SUPPLY CURRENT
vs
FREQUENCY

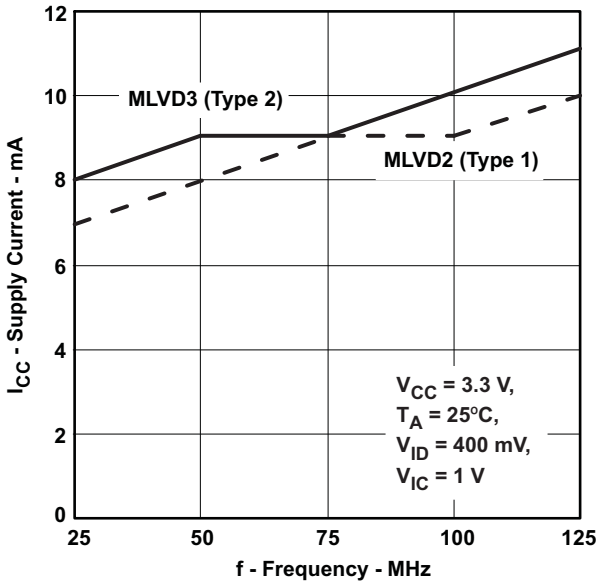

Figure 5.

RECEIVER (TYPE-1) PROPAGATION DELAY TIME
vs
FREE-AIR TEMPERATURE

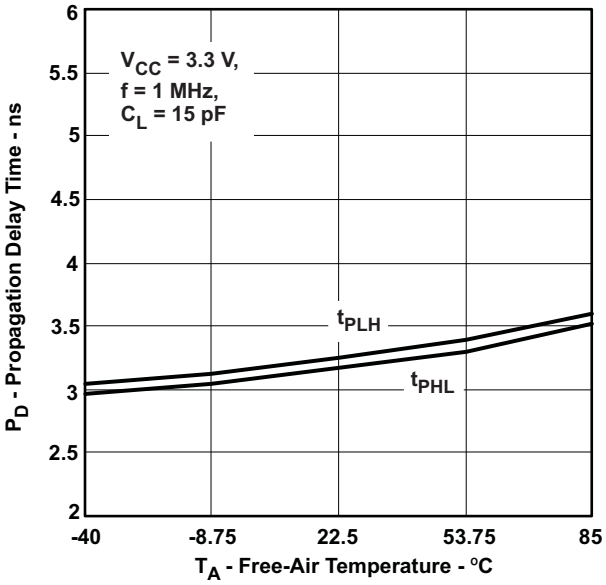

Figure 6.

RECEIVER (TYPE-2) PROPAGATION DELAY TIME
vs
FREE-AIR TEMPERATURE

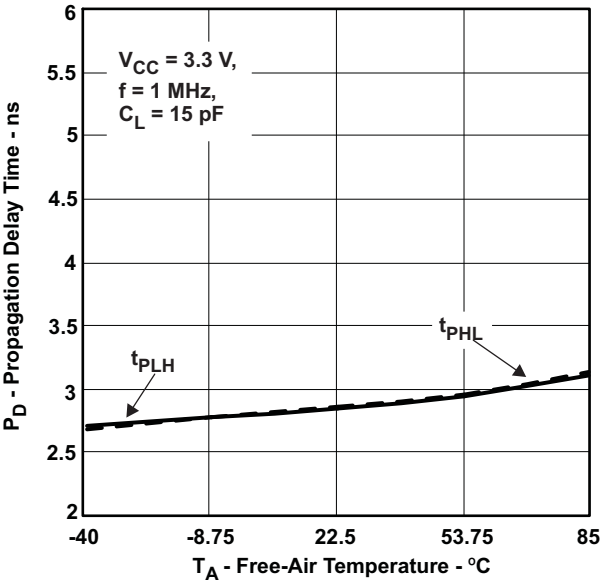

Figure 7.

RECEIVER (TYPE-1) TRANSITION TIME
vs
FREE-AIR TEMPERATURE

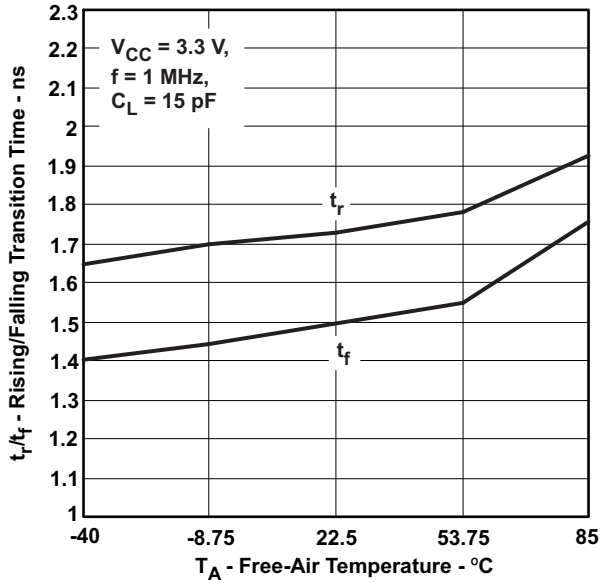

Figure 8.

TYPICAL CHARACTERISTICS (continued)

RECEIVER (TYPE-2) TRANSITION TIME
vs
FREE-AIR TEMPERATURE

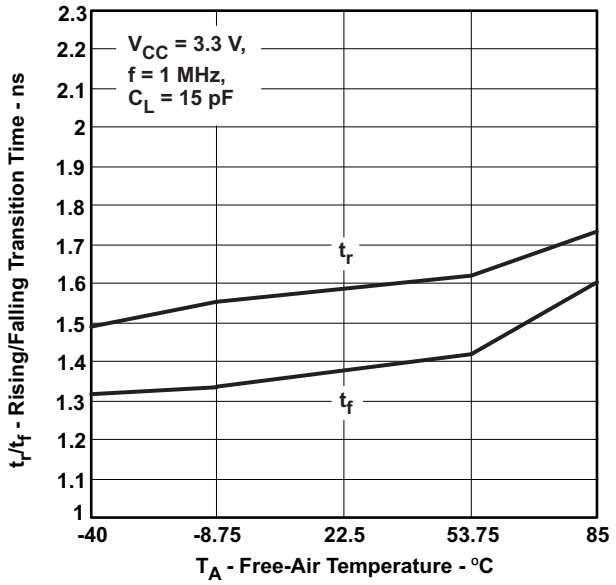

Figure 9.

RECEIVER (TYPE-1) TRANSITION TIME
vs
OUTPUT LOAD CAPACITOR

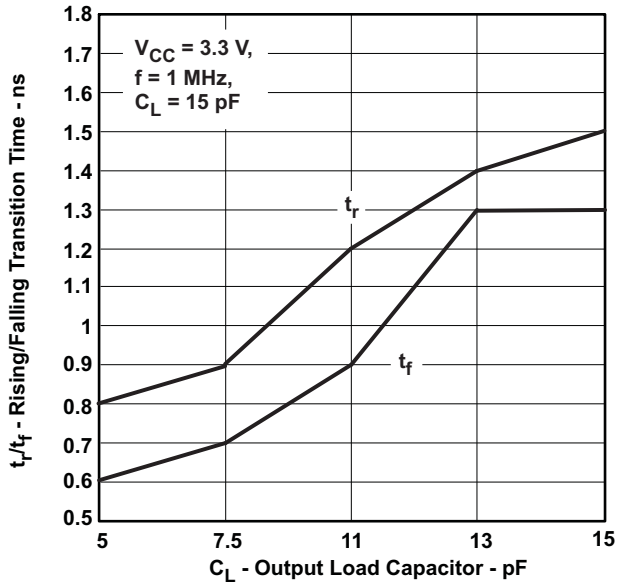

Figure 10.

RECEIVER (TYPE-2) TRANSITION TIME
vs
OUTPUT LOAD CAPACITOR

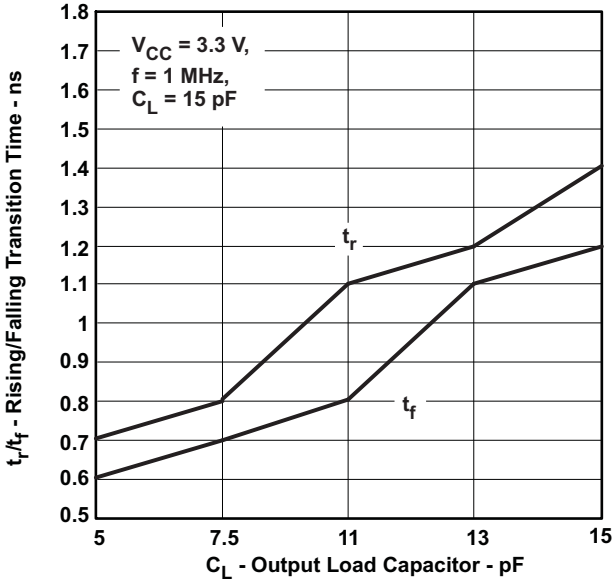

Figure 11.

ADDED RECEIVER PEAK-TO-PEAK JITTER
vs
SIGNALING RATE

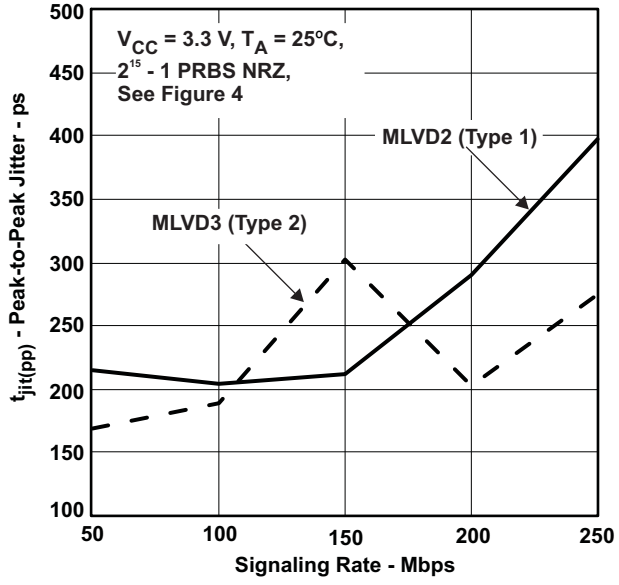

Figure 12.

TYPICAL CHARACTERISTICS (continued)

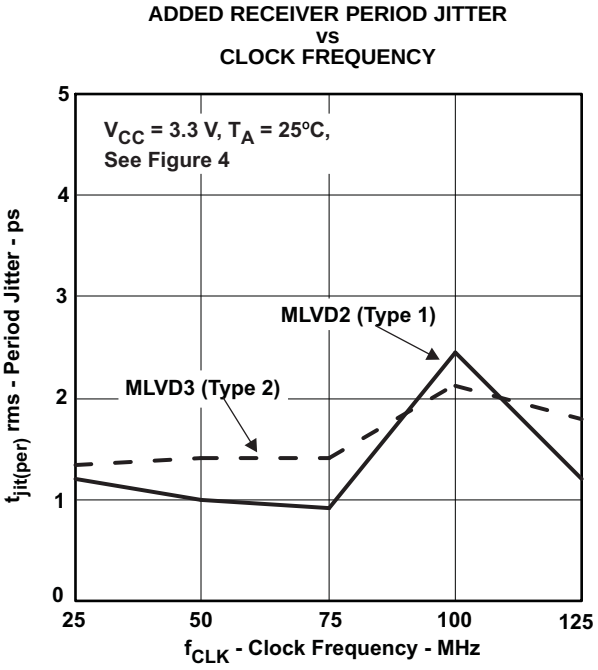

Figure 13.

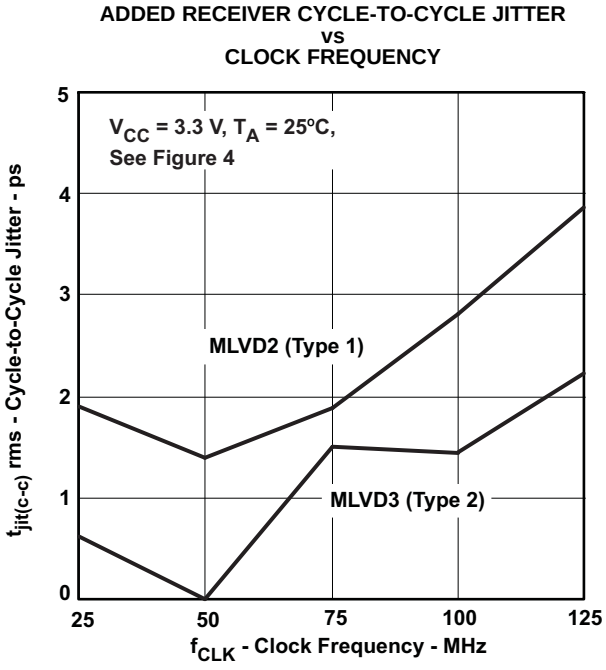

Figure 14.

EYE PATTERNS

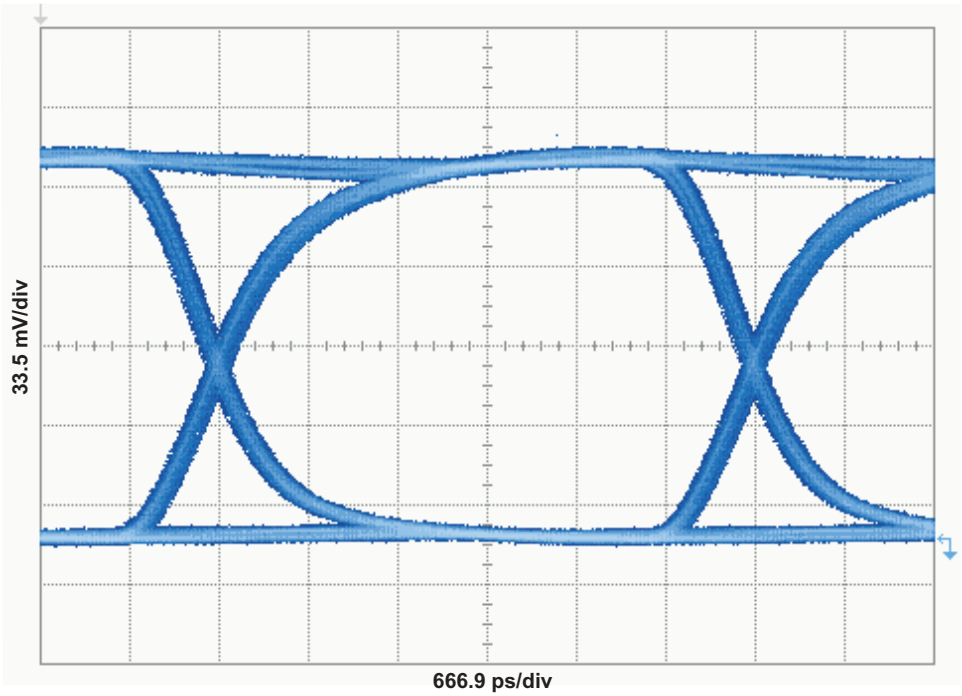

Figure 15. SN65MLVD2 Output (V_{CC} = 3.3 V, C_L = 15 pF) 250 Mbps 2^{15}–1 PRBS

TYPICAL CHARACTERISTICS (continued)

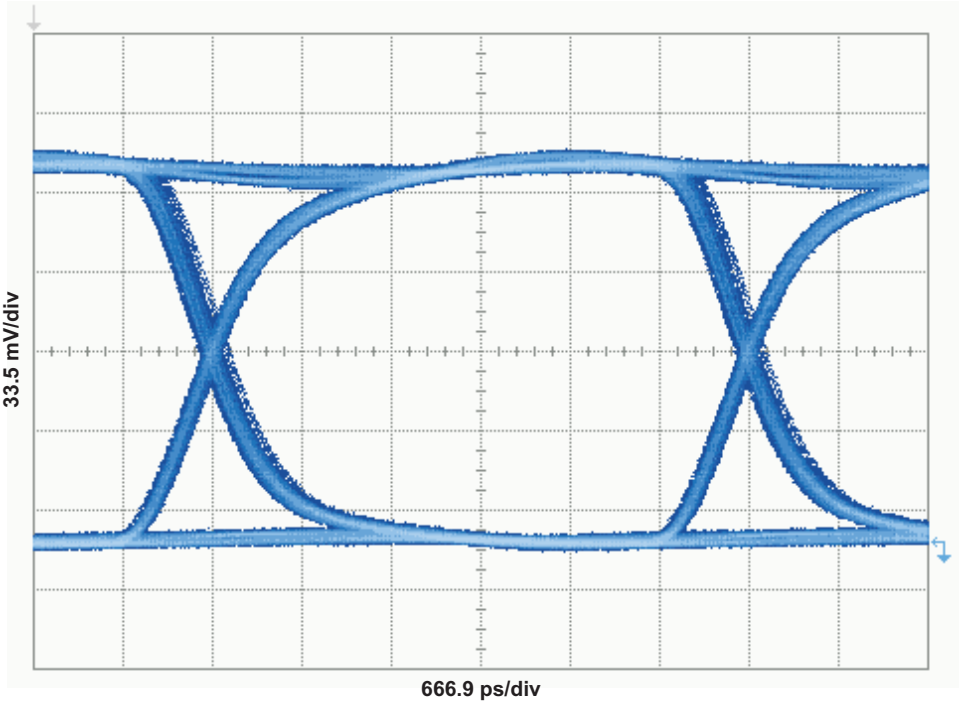

Figure 16. SN65MLVD3 Output (V_{CC} = 3.3 V, C_L = 15 pF) 250 Mbps 2^{15}–1 PRBS

PACKAGING INFORMATION

Orderable Device	Status (1)	Package Type	Package Drawing	Pins	Package Qty	Eco Plan (2)	Lead/Ball Finish (6)	MSL Peak Temp (3)	Op Temp (°C)	Device Marking (4/5)	Samples
SN65MLVD2DRBR	ACTIVE	SON	DRB	8	3000	Green (RoHS & no Sb/Br)	NIPDAU	Level-2-260C-1 YEAR	-40 to 85	MF2	Samples
SN65MLVD2DRBT	ACTIVE	SON	DRB	8	250	Green (RoHS & no Sb/Br)	NIPDAU	Level-2-260C-1 YEAR	-40 to 85	MF2	Samples
SN65MLVD3DRBR	ACTIVE	SON	DRB	8	3000	Green (RoHS & no Sb/Br)	NIPDAU	Level-2-260C-1 YEAR	-40 to 85	MF3	Samples
SN65MLVD3DRBT	ACTIVE	SON	DRB	8	250	Green (RoHS & no Sb/Br)	NIPDAU	Level-2-260C-1 YEAR	-40 to 85	MF3	Samples

(1) The marketing status values are defined as follows:
ACTIVE: Product device recommended for new designs.
LIFEBUY: TI has announced that the device will be discontinued, and a lifetime-buy period is in effect.
NRND: Not recommended for new designs. Device is in production to support existing customers, but TI does not recommend using this part in a new design.
PREVIEW: Device has been announced but is not in production. Samples may or may not be available.
OBSOLETE: TI has discontinued the production of the device.

(2) **RoHS:** TI defines "RoHS" to mean semiconductor products that are compliant with the current EU RoHS requirements for all 10 RoHS substances, including the requirement that RoHS substance do not exceed 0.1% by weight in homogeneous materials. Where designed to be soldered at high temperatures, "RoHS" products are suitable for use in specified lead-free processes. TI may reference these types of products as "Pb-Free".
RoHS Exempt: TI defines "RoHS Exempt" to mean products that contain lead but are compliant with EU RoHS pursuant to a specific EU RoHS exemption.
Green: TI defines "Green" to mean the content of Chlorine (Cl) and Bromine (Br) based flame retardants meet JS709B low halogen requirements of <=1000ppm threshold. Antimony trioxide based flame retardants must also meet the <=1000ppm threshold requirement.

(3) MSL, Peak Temp. - The Moisture Sensitivity Level rating according to the JEDEC industry standard classifications, and peak solder temperature.

(4) There may be additional marking, which relates to the logo, the lot trace code information, or the environmental category on the device.

(5) Multiple Device Markings will be inside parentheses. Only one Device Marking contained in parentheses and separated by a "~" will appear on a device. If a line is indented then it is a continuation of the previous line and the two combined represent the entire Device Marking for that device.

(6) Lead/Ball Finish - Orderable Devices may have multiple material finish options. Finish options are separated by a vertical ruled line. Lead/Ball Finish values may wrap to two lines if the finish value exceeds the maximum column width.

Important Information and Disclaimer: The information provided on this page represents TI's knowledge and belief as of the date that it is provided. TI bases its knowledge and belief on information provided by third parties, and makes no representation or warranty as to the accuracy of such information. Efforts are underway to better integrate information from third parties. TI has taken and

continues to take reasonable steps to provide representative and accurate information but may not have conducted destructive testing or chemical analysis on incoming materials and chemicals.
TI and TI suppliers consider certain information to be proprietary, and thus CAS numbers and other limited information may not be available for release.

In no event shall TI's liability arising out of such information exceed the total purchase price of the TI part(s) at issue in this document sold by TI to Customer on an annual basis.

TAPE AND REEL INFORMATION

REEL DIMENSIONS

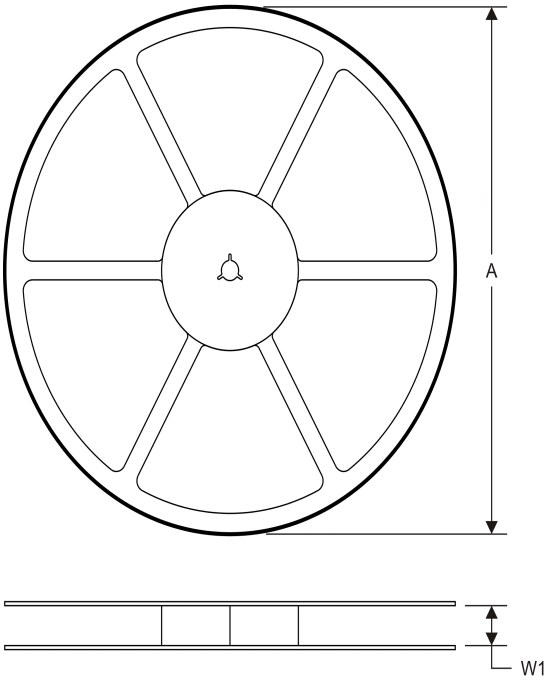

TAPE DIMENSIONS

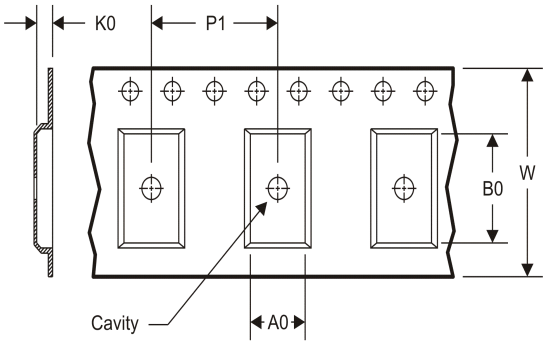

A0	Dimension designed to accommodate the component width
B0	Dimension designed to accommodate the component length
K0	Dimension designed to accommodate the component thickness
W	Overall width of the carrier tape
P1	Pitch between successive cavity centers

TAPE AND REEL INFORMATION

*All dimensions are nominal

Device	Package Type	Package Drawing	Pins	SPQ	Reel Diameter (mm)	Reel Width W1 (mm)	A0 (mm)	B0 (mm)	K0 (mm)	P1 (mm)	W (mm)	Pin1 Quadrant
SN65MLVD2DRBR	SON	DRB	8	3000	330.0	12.4	3.3	3.3	1.1	8.0	12.0	Q2
SN65MLVD2DRBT	SON	DRB	8	250	180.0	12.4	3.3	3.3	1.1	8.0	12.0	Q2
SN65MLVD3DRBR	SON	DRB	8	3000	330.0	12.4	3.3	3.3	1.1	8.0	12.0	Q2
SN65MLVD3DRBT	SON	DRB	8	250	180.0	12.4	3.3	3.3	1.1	8.0	12.0	Q2

TAPE AND REEL BOX DIMENSIONS

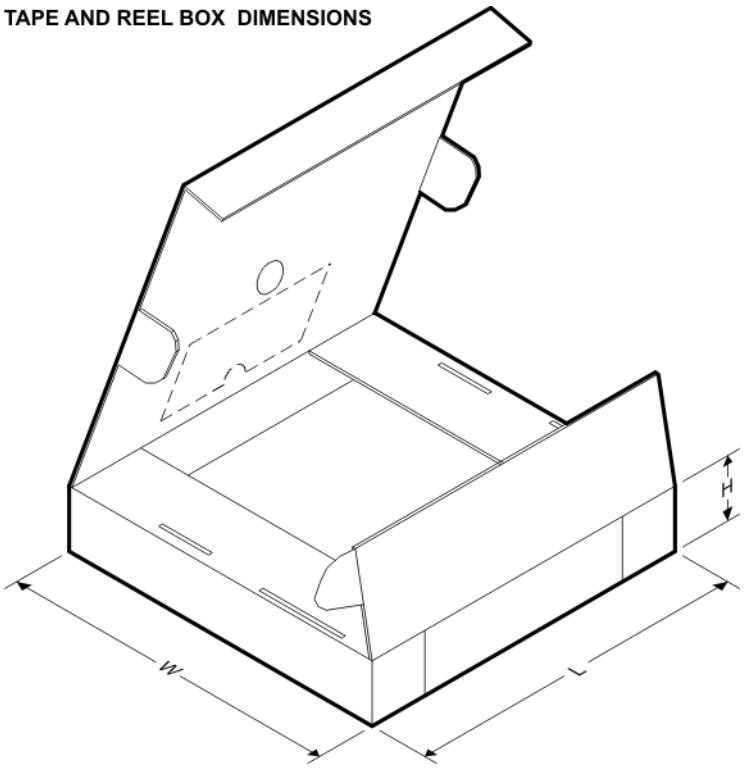

*All dimensions are nominal

Device	Package Type	Package Drawing	Pins	SPQ	Length (mm)	Width (mm)	Height (mm)
SN65MLVD2DRBR	SON	DRB	8	3000	367.0	367.0	35.0
SN65MLVD2DRBT	SON	DRB	8	250	210.0	185.0	35.0
SN65MLVD3DRBR	SON	DRB	8	3000	367.0	367.0	35.0
SN65MLVD3DRBT	SON	DRB	8	250	210.0	185.0	35.0

GENERIC PACKAGE VIEW

DRB 8

VSON - 1 mm max height

PLASTIC SMALL OUTLINE - NO LEAD



Images above are just a representation of the package family, actual package may vary.
Refer to the product data sheet for package details.

4203482/L

PACKAGE OUTLINE

DRB0008A

VSON - 1 mm max height

PLASTIC SMALL OUTLINE - NO LEAD

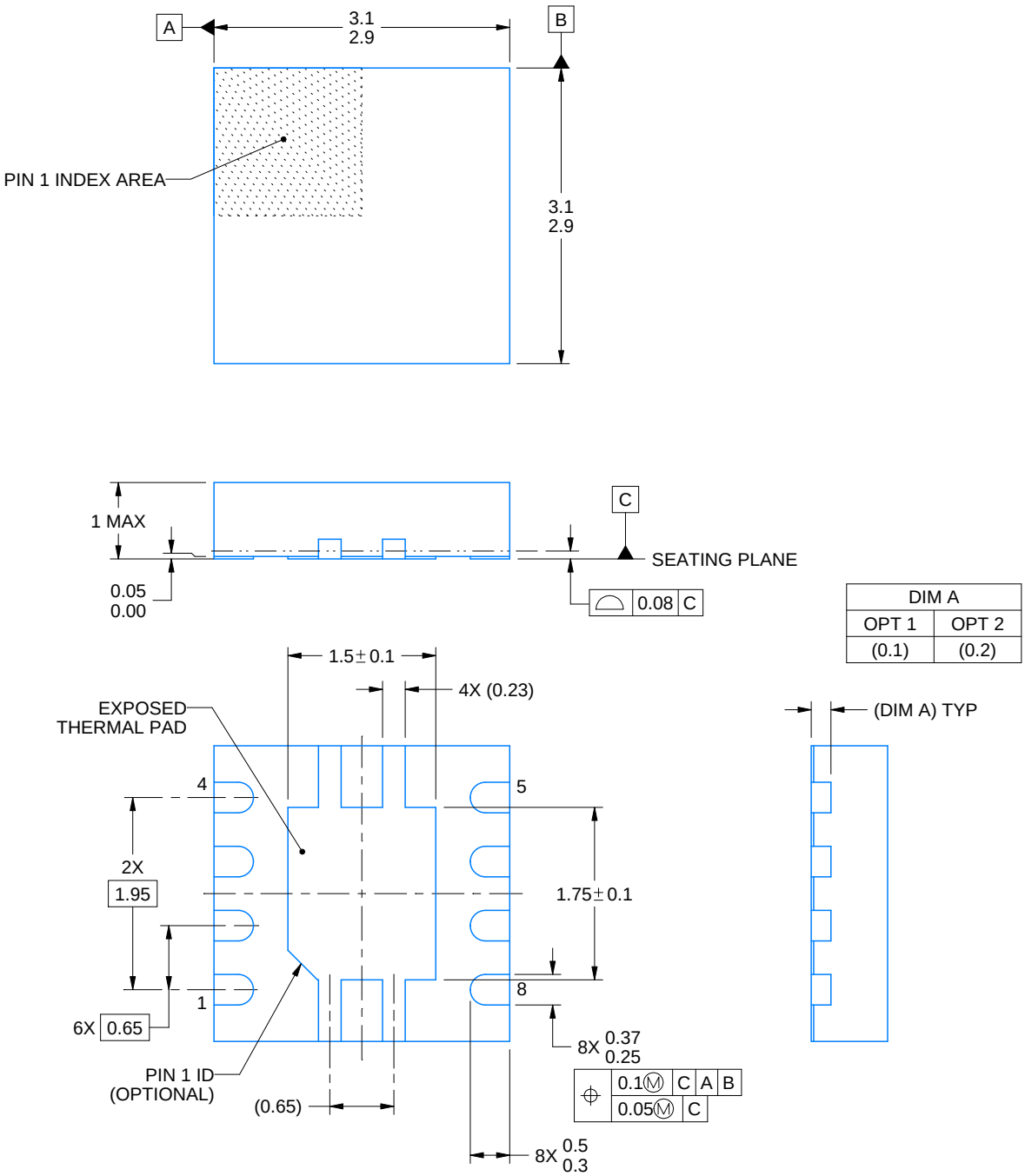

NOTES:

1. All linear dimensions are in millimeters. Any dimensions in parenthesis are for reference only. Dimensioning and tolerancing per ASME Y14.5M.
2. This drawing is subject to change without notice.
3. The package thermal pad must be soldered to the printed circuit board for thermal and mechanical performance.

EXAMPLE BOARD LAYOUT

DRB0008A

VSON - 1 mm max height

PLASTIC SMALL OUTLINE - NO LEAD

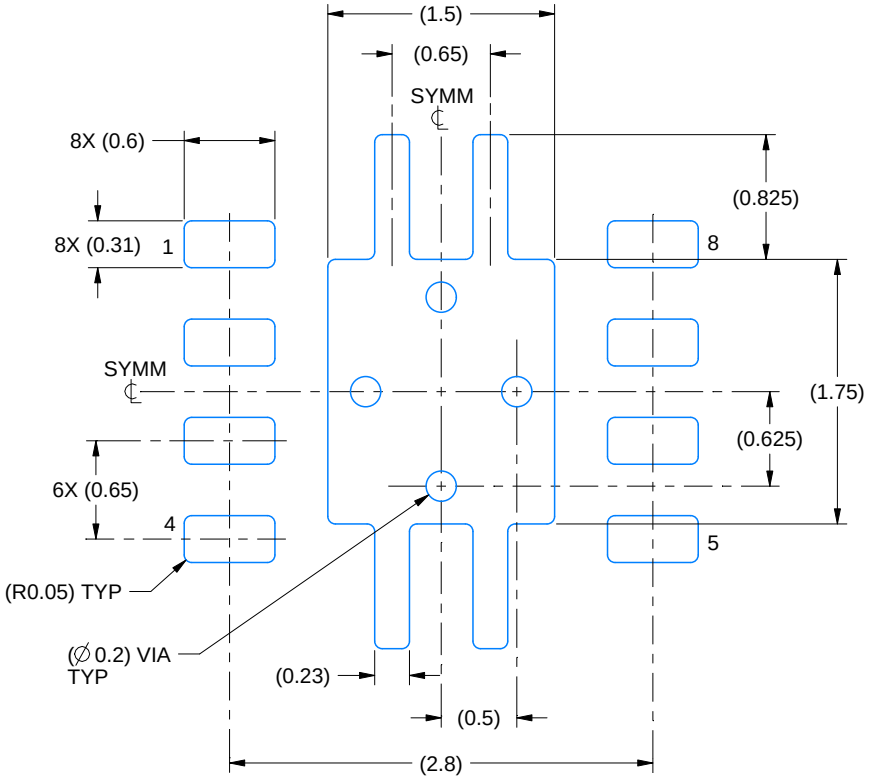

LAND PATTERN EXAMPLE
EXPOSED METAL SHOWN
SCALE:20X

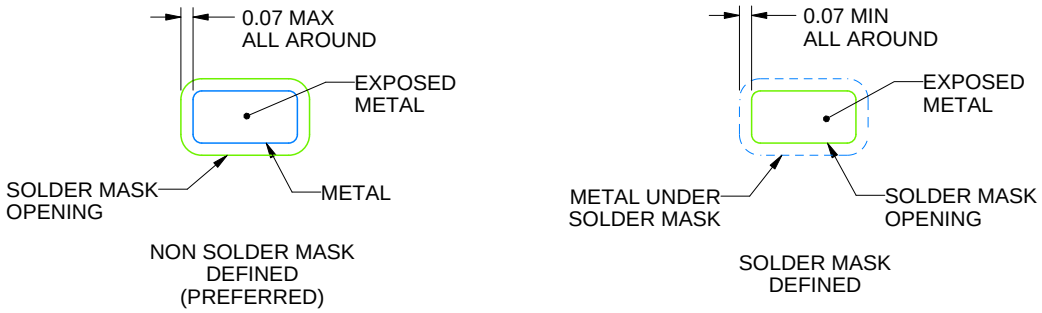

SOLDER MASK DETAILS

4218875/A 01/2018

NOTES: (continued)

4. This package is designed to be soldered to a thermal pad on the board. For more information, see Texas Instruments literature number SLUA271 (www.ti.com/lit/slua271).
5. Vias are optional depending on application, refer to device data sheet. If any vias are implemented, refer to their locations shown on this view. It is recommended that vias under paste be filled, plugged or tented.

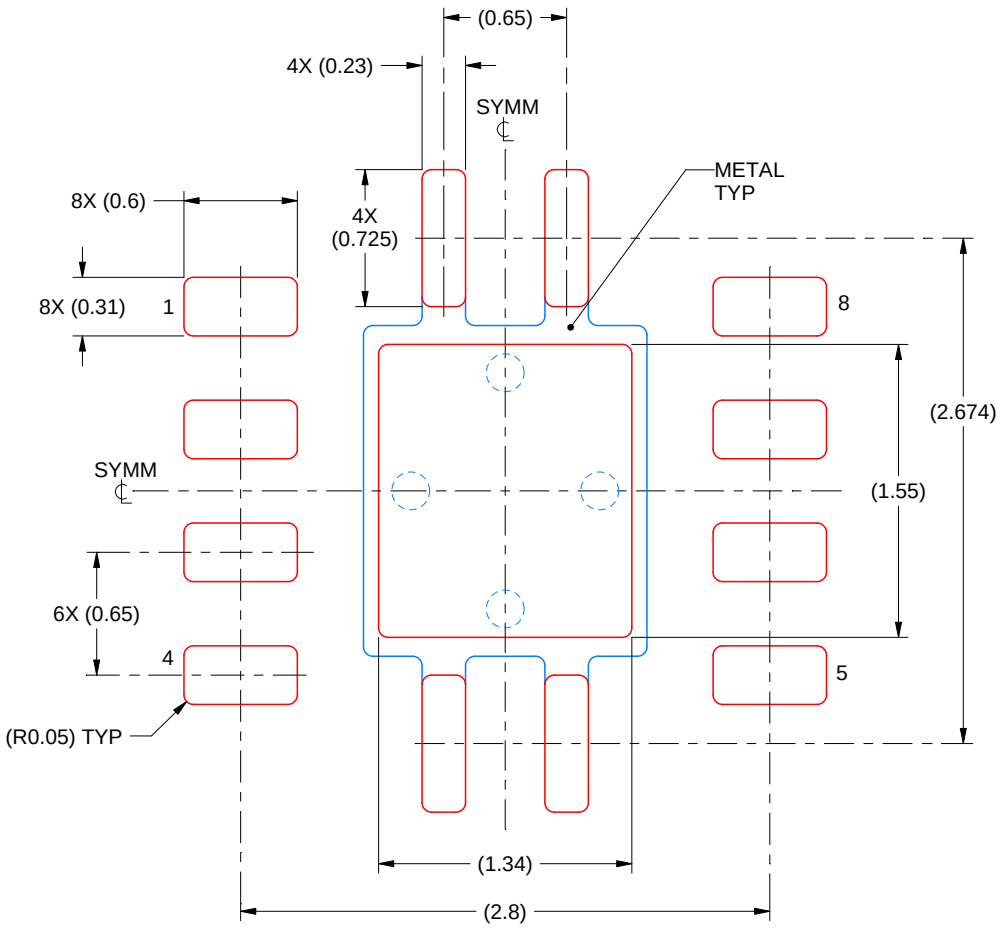

SOLDER PASTE EXAMPLE
BASED ON 0.125 mm THICK STENCIL

EXPOSED PAD
84% PRINTED SOLDER COVERAGE BY AREA
SCALE:25X

4218875/A 01/2018

NOTES: (continued)

6. Laser cutting apertures with trapezoidal walls and rounded corners may offer better paste release. IPC-7525 may have alternate design recommendations.

IMPORTANT NOTICE AND DISCLAIMER

TI PROVIDES TECHNICAL AND RELIABILITY DATA (INCLUDING DATASHEETS), DESIGN RESOURCES (INCLUDING REFERENCE DESIGNS), APPLICATION OR OTHER DESIGN ADVICE, WEB TOOLS, SAFETY INFORMATION, AND OTHER RESOURCES “AS IS” AND WITH ALL FAULTS, AND DISCLAIMS ALL WARRANTIES, EXPRESS AND IMPLIED, INCLUDING WITHOUT LIMITATION ANY IMPLIED WARRANTIES OF MERCHANTABILITY, FITNESS FOR A PARTICULAR PURPOSE OR NON-INFRINGEMENT OF THIRD PARTY INTELLECTUAL PROPERTY RIGHTS.

These resources are intended for skilled developers designing with TI products. You are solely responsible for (1) selecting the appropriate TI products for your application, (2) designing, validating and testing your application, and (3) ensuring your application meets applicable standards, and any other safety, security, or other requirements. These resources are subject to change without notice. TI grants you permission to use these resources only for development of an application that uses the TI products described in the resource. Other reproduction and display of these resources is prohibited. No license is granted to any other TI intellectual property right or to any third party intellectual property right. TI disclaims responsibility for, and you will fully indemnify TI and its representatives against, any claims, damages, costs, losses, and liabilities arising out of your use of these resources.

TI’s products are provided subject to TI’s Terms of Sale (www.ti.com/legal/termsofsale.html) or other applicable terms available either on ti.com or provided in conjunction with such TI products. TI’s provision of these resources does not expand or otherwise alter TI’s applicable warranties or warranty disclaimers for TI products.

Mailing Address: Texas Instruments, Post Office Box 655303, Dallas, Texas 75265
Copyright © 2020, Texas Instruments Incorporated