SN65LVPE502CP EVM User's Guide

User's Guide



Literature Number: SLLU142A
March 2011–Revised May 2011

Copyright © 2011, Texas Instruments Incorporated

Contents

1 Introduction 7
2 SN65LVPE502CP EVM Configuration 9
1 SN65LVPE502CP EVM Kit Contents 9
2 Description of EVM Board 9
3 Selecting De-Emphasis Level for SN65LVPE502CP 11
4 Selecting Power for the SN65LVPE502CP EVM 11
5 Powering the SN65LVPE502CP EVM Using the USB Host 11
6 Monitoring the Device Current 12
3 PCB Construction 13
1 SN65LVPE502CP EVM Board Schematics 13
2 SN65LVPE502CP EVM Board Layout 18
3 SN65LVPE502CP EVM Board Construction 25
Appendix A SN65LVPE502CP EVM Bill of Materials 27

Copyright © 2011, Texas Instruments Incorporated

List of Figures

1 SN65LVPE502CP Functional System Level Block Diagram 7
2 SN65LVPE502CP EVM With Jumpers Highlighted (Top Side) 9
3 SN65LVPE502CP EVM Location of R1 and JMP9 11
4 SN65LVPE502CP EVM location of L1, R1, and JMP10 12
5 SN65LVPE502CP EVM Schematic (High Speed Pins) 14
6 SN65LVPE502CP EVM Schematic (TX and RX Control Pins) 15
7 SN65LVPE502CP EVM Schematic (Device Control Pins) 16
8 SN65LVPE502CP EVM Schematic (Power and GND Pins) 17
9 SN65LVPE502CP EVM Layout Layer 1 (Top) 19
10 SN65LVPE502CP EVM Layout Layer 2 (GND) 20
11 SN65LVPE502CP EVM Layout Layer 3 (VCC) 21
12 SN65LVPE502CP EVM Layout Layer 4 (GND) 22
13 SN65LVPE502CP EVM Layout Layer 5 (GND) 23
14 SN65LVPE502CP EVM Layout Layer 6 (Bottom) 24
15 SN65LVPE502CP EVM Layer Stack-Up 25

List of Tables

1 SN65LVPE502CP EVM Jumper Description and Settings 10
2 SN65LVPE502CP De-Emphasis Selection Table 11
3 Bill of Materials 28

Copyright © 2011, Texas Instruments Incorporated

This is the user's guide for the evaluation module (EVM) of the SN65LVPE502CP. The purpose of this user's guide is to facilitate an easy evaluation process of our SN65LVPE502CP USB 3.0 Re-Driver.

The contents of this user's guide are meant to provide an overview of the SN65LVPE502CP, which includes highlighting its key features, operating conditions, and how to setup this EVM for use in a system level evaluation.

The construction of the SN65LVPE502CP EVM also serves as a reference design that can be easily modified for any intended application. Target applications include Notebooks, Desktops, Docking Stations, Backplane, and Cabled applications. Schematic and layout information is included at the end of this manual.

Copyright © 2011, Texas Instruments Incorporated

Copyright © 2011, Texas Instruments Incorporated

Introduction

The SN65LVPE502CP is a dual channel, single lane USB 3.0 re-driver and signal conditioner supporting data rates of 5.0Gbps. The device complies with USB 3.0 spec revision 1.0, supporting electrical idle condition and low frequency periodic signals (LFPS) for USB 3.0 power management modes.

The device offers programmable equalization, de-emphasis and amplitude swing that extends the interconnect distance between two devices. Also, the device supports two low power modes: Sleep Mode and Low Power when unplugged. The device can also function in USB compliance mode to test the transmitter for compliance to voltage and timing specifications per USB 3.0 compliance specs.

This EVM was designed to be used as a medium connection between a USB host and a USB device. The interface to the EVM consists of a USB 3.0 Type A Receptacle and a USB 3.0 Type B Receptacle. Therefore, in order to connect the EVM to your system set up, you will most likely need two USB 3.0 Standard Type A→B cables. Your test setup should look similar to the figure below:

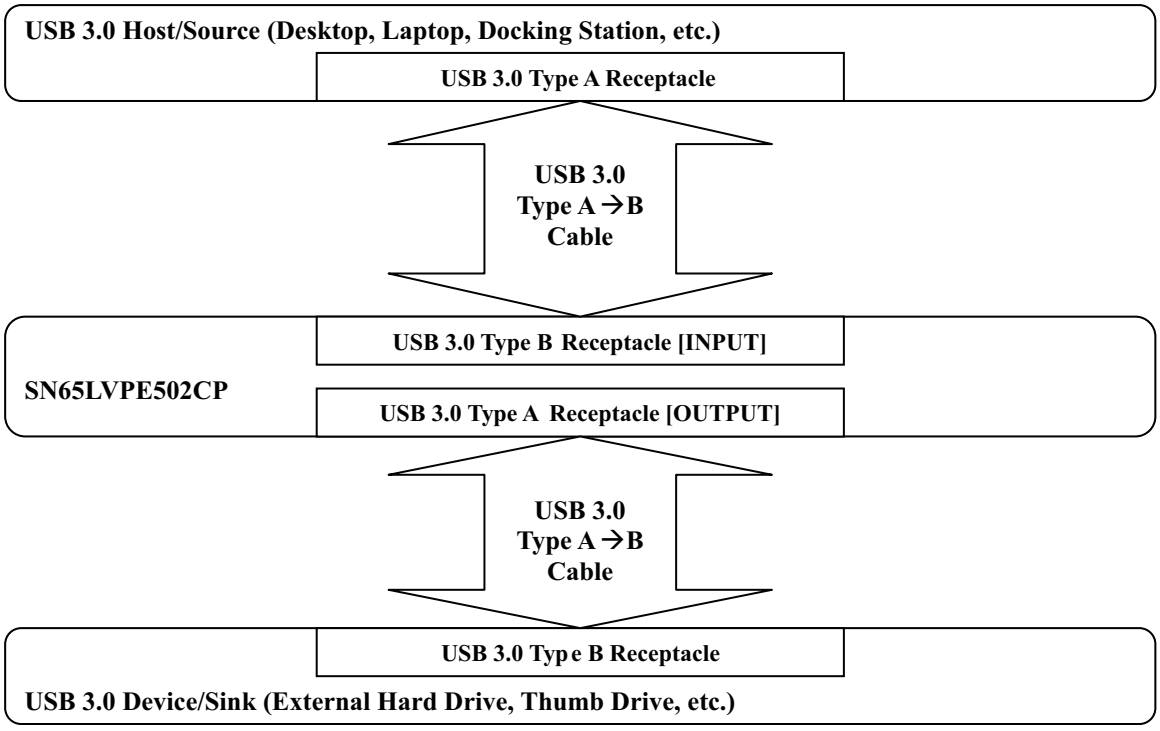

Figure 1. SN65LVPE502CP Functional System Level Block Diagram

Copyright © 2011, Texas Instruments Incorporated

Copyright © 2011, Texas Instruments Incorporated

SN65LVPE502CP EVM Configuration

1 SN65LVPE502CP EVM Kit Contents

This EVM kit should contain the following items:

- SN65LVPE502CP EVM board
- 9-V DC power supply
- This user's guide

2 Description of EVM Board

The SN65LVPE502CP EVM is designed to provide easy evaluation of the SN65LVPE502CP device. It is also meant to serve as a reference design to show a practical example of how to use the device in a mass-production system. Figure 2 highlights the jumpers installed on this EVM and Table 1 highlights their functionality and configuration.

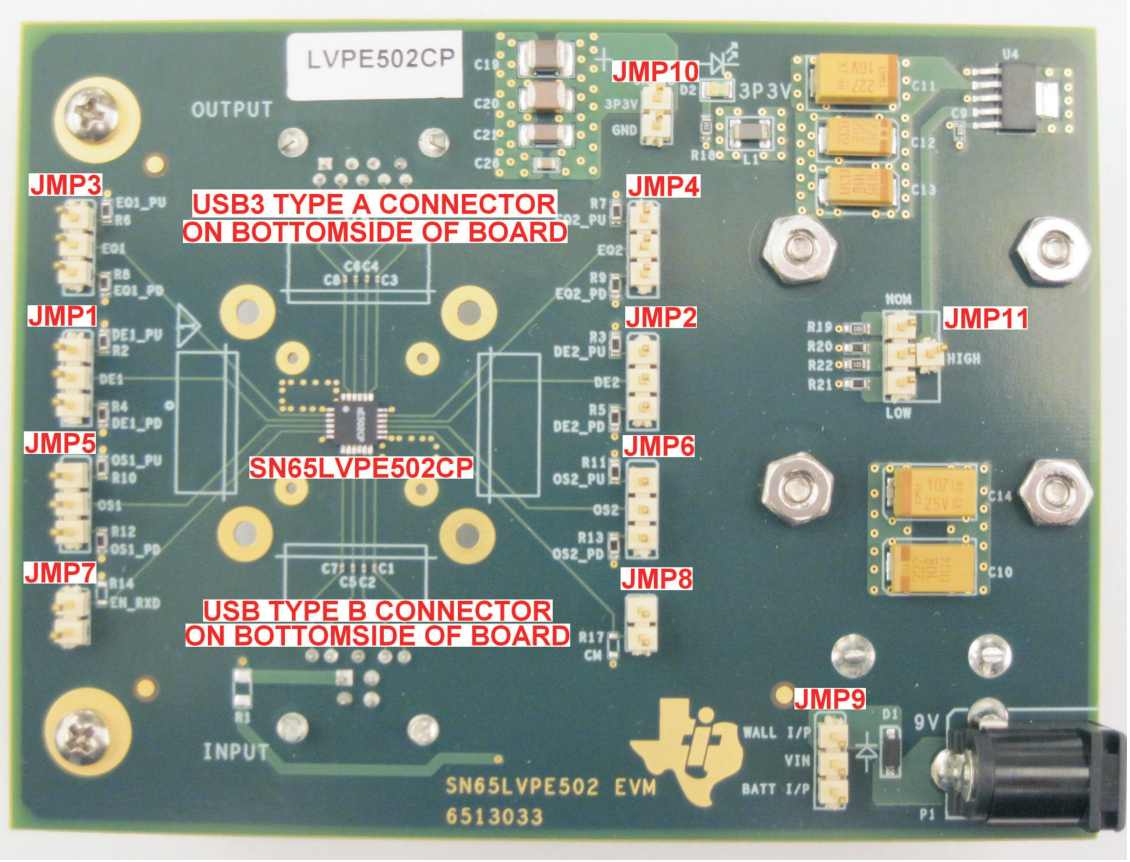

Figure 2. SN65LVPE502CP EVM With Jumpers Highlighted (Top Side)

Copyright © 2011, Texas Instruments Incorporated

Table 1. SN65LVPE502CP EVM Jumper Description and Settings

JUMPER NUMBER	FUNCTIONALITY AND CONFIGURATION
JMP1	De-emphasis control selector for transmitter channel 1
	High = Shunt pins 2 and 1 ["DE1" and "DE1_PU"]
	Low = Shunt pins 2 and 3 ["DE1" and "DE1_PD"]
	Mid-Level = Do not install shunt
	Refer to Table 2 for actual de-emphasis level
JMP2	De-emphasis control selector for transmitter channel 2
	High = Shunt pins 2 and 1 ["DE2" and "DE2_PU"]
	Low = Shunt pins 2 and 3 ["DE2" and "DE2_PD"]
	Mid-Level = Do not install shunt
	Refer to Table 2 for actual de-emphasis level
JMP3	Equalization control selector for receiver channel 1
	High (15 dB) = Shunt pins 2 and 1 ["EQ1" and "EQ1_PU"]
	Low (7 dB) = Shunt pins 2 and 3 ["EQ1" and "EQ1_PD"]
	Mid-Level (0 dB) = Do not install shunt
JMP4	Equalization control selector for receiver channel 2
	High (15 dB) = Shunt pins 2 and 1 ["EQ2" and "EQ2_PU"]
	Low (7 dB) = Shunt pins 2 and 3 ["EQ2" and "EQ2_PD"]
	Mid-Level (0 dB) = Do not install shunt
JMP5	Output swing control selector for receiver channel 1
	High (1166 mVp-p) = Shunt pins 2 and 1 ["OS1" and "OS1_PU"]
	Low (833 mVp-p) = Shunt pins 2 and 3 ["OS1" and "OS1_PD"]
	Mid-Level (1000 mVp-p) = Do not install shunt
JMP6	Output swing control selector for receiver channel 2
	High (1166 mVp-p) = Shunt pins 2 and 1 ["OS2" and "OS2_PU"]
	Low (833 mVp-p) = Shunt pins 2 and 3 ["OS2" and "OS2_PD"]
	Mid-Level (1000 mVp-p) = Do not install shunt
JMP7	Sleep mode selector for LVPE502
	High (normal mode) = Do not install shunt
	Low (sleep mode) = Install shunt
JMP8	Compliance mode selector for LVPE502
	High (compliance mode) = Install shunt
	Low (normal mode) = Do not install shunt
JMP9	Power source selector for LVPE502
	Wall socket = Shunt pins 2 and 1 ["VIN" and "WALL I/P"]
	Battery = Shunt pins 2 and 3 ["VIN" and "BATT I/P"]
JMP10	Test point for measuring current draw
	Read "Monitoring the device current" before using JMP10
JMP11	Device voltage selector
	3 V = Shunt pins 2 and 1 (center pin to "LOW")
	3.3 V = Shunt pins 2 and 3 (center pin to "NOM")
	3.6 V = Shunt pins 2 and 4 (center pin to "HIGH")

Copyright © 2011, Texas Instruments Incorporated

3 Selecting De-Emphasis Level for SN65LVPE502CP

The output de-emphasis level of each transmitter channel also depends on the output swing level selected for that channel. Table 2 lists all possible de-emphasis levels that can be achieved with the SN65LVPE502CP:

Table 2. SN65LVPE502CP De-Emphasis Selection Table

DE-EMPHASIS LEVEL SELECTOR			
	and OS Pin = High	**and OS Pin = Low**	**and OS Pin = Mid-Level**
If DE Pin = High	-6.1 dB	-5.2 dB	-6.1 dB
If DE Pin = Low	-4.5 dB	-2.3 dB	-3.6 dB
If DE Pin = Mid-Level	0 dB	0 dB	0 dB

4 Selecting Power for the SN65LVPE502CP EVM

The SN65LVPE502CP EVM kit comes with a 9-V DC power supply that plugs into a wall socket. An alternative option is to use a 9-V battery, which would be placed in the battery compartment on the bottom side of the EVM. Use JMP9 to select which of these two options you would like to use for operating the EVM.

5 Powering the SN65LVPE502CP EVM Using the USB Host

In addition to using a wall socket or battery, a third option exists for selecting the power source to the EVM. All USB 3.0 hosts, devices and cables have a power pin on their connector that is named VBUS. The purpose of this pin is to allow a USB Host to supply power to a USB device through the USB cable. The SN65LVPE502CP EVM gives you the option of powering the SN65LVPE502CP using this pin. In order to enable this feature, you must do two things:

1. Remove any battery or external power supply that is connected to the EVM. If left connected they could back-drive current into your USB Host, rendering your USB host inoperable. **Please take caution.**
2. Remove any USB cables connected to the EVM.
3. Remove any shunts on JMP9 (see Figure 3).
4. Install a 0-Ω, 0805 sized SMT resistor at location R1 (see Figure 3).

Once completed, plug your USB 3.0 Host and Device into the EVM, and you should be able to use this EVM without the need for a wall socket or battery.

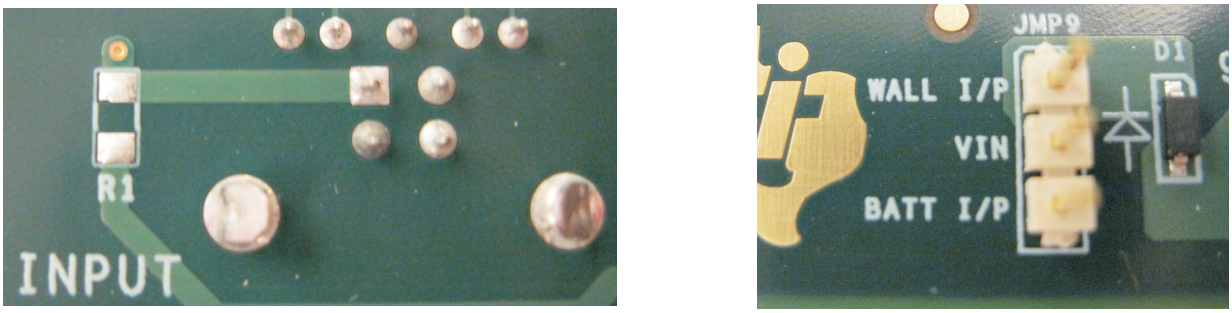

Figure 3. SN65LVPE502CP EVM Location of R1 and JMP9

NOTE: Should you decide to revert back to using a wall socket or battery, it is important to uninstall R1. When R1 is installed, the VBUS power pin connects to the same power plane used by the wall socket and battery. This allows the wall socket or battery to back-drive current into your USB Host via the VBUS power pin. This could potentially render your USB host inoperable. **Please take caution.**

Copyright © 2011, Texas Instruments Incorporated

6 Monitoring the Device Current

One of the highlights of the SN65LVPE502CP is its power saving modes. To observe these savings in your device evaluation, the SN65LVPE502CP EVM includes the option of monitoring the current draw of the device. In order to enable this feature, the following steps must be taken:

1. Un-install the ferrite bead located at L1, and if present, also uninstall the resistor located at R1 (see Figure 4).
2. Obtain a power supply with the ability to display its current draw (or connect a current meter in series to the power supply) and connect to JMP10 (see Figure 4).
3. Turn on your power supply and observe the measured current on your power supply display (or current meter).

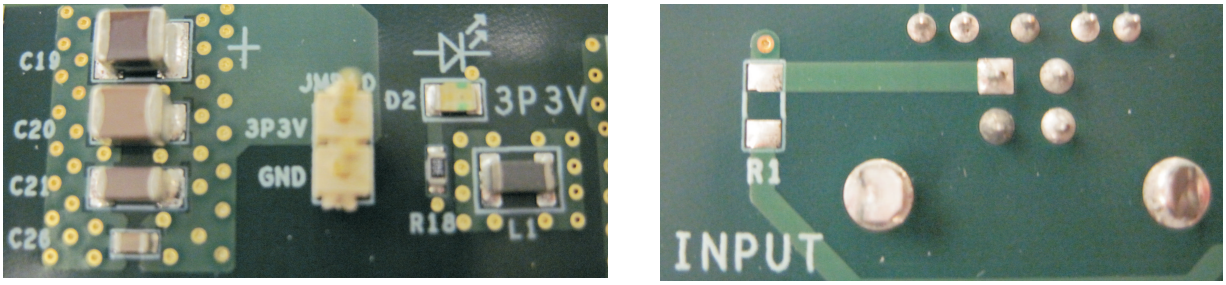

Figure 4. SN65LVPE502CP EVM location of L1, R1, and JMP10

In order to revert back to powering the EVM through the wall socket, battery or USB Host, you must remove the power supply that is currently connected, and re-install the ferrite bead.

Copyright © 2011, Texas Instruments Incorporated

PCB Construction

This section discusses the construction of the EVM boards. It includes the board schematics and layout files to show how the board was built.

1 SN65LVPE502CP EVM Board Schematics

This section shows the board schematic sheets for the EVM.

Copyright © 2011, Texas Instruments Incorporated

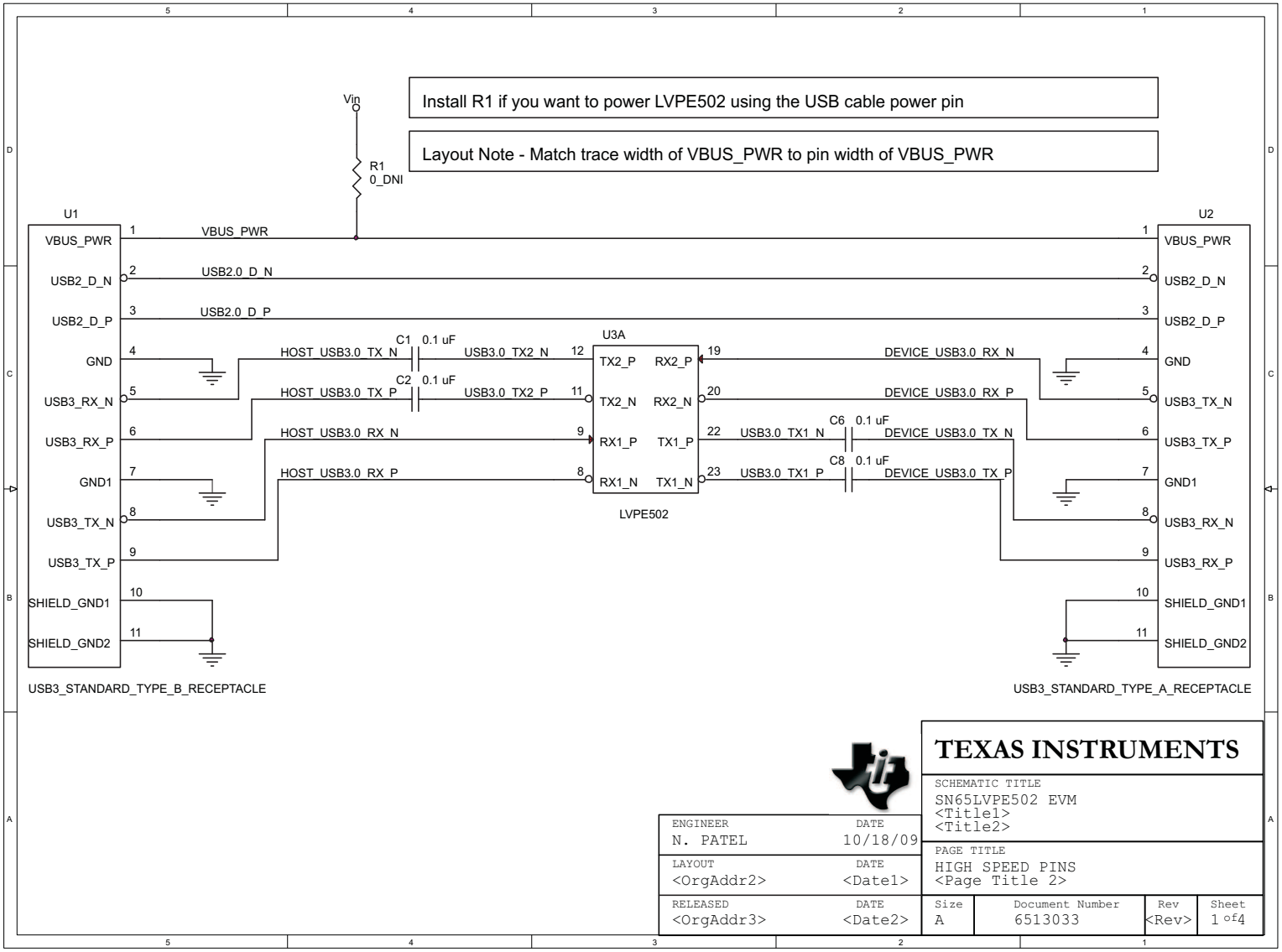

Figure 5. SN65LVPE502CP EVM Schematic (High Speed Pins)

Copyright © 2011, Texas Instruments Incorporated

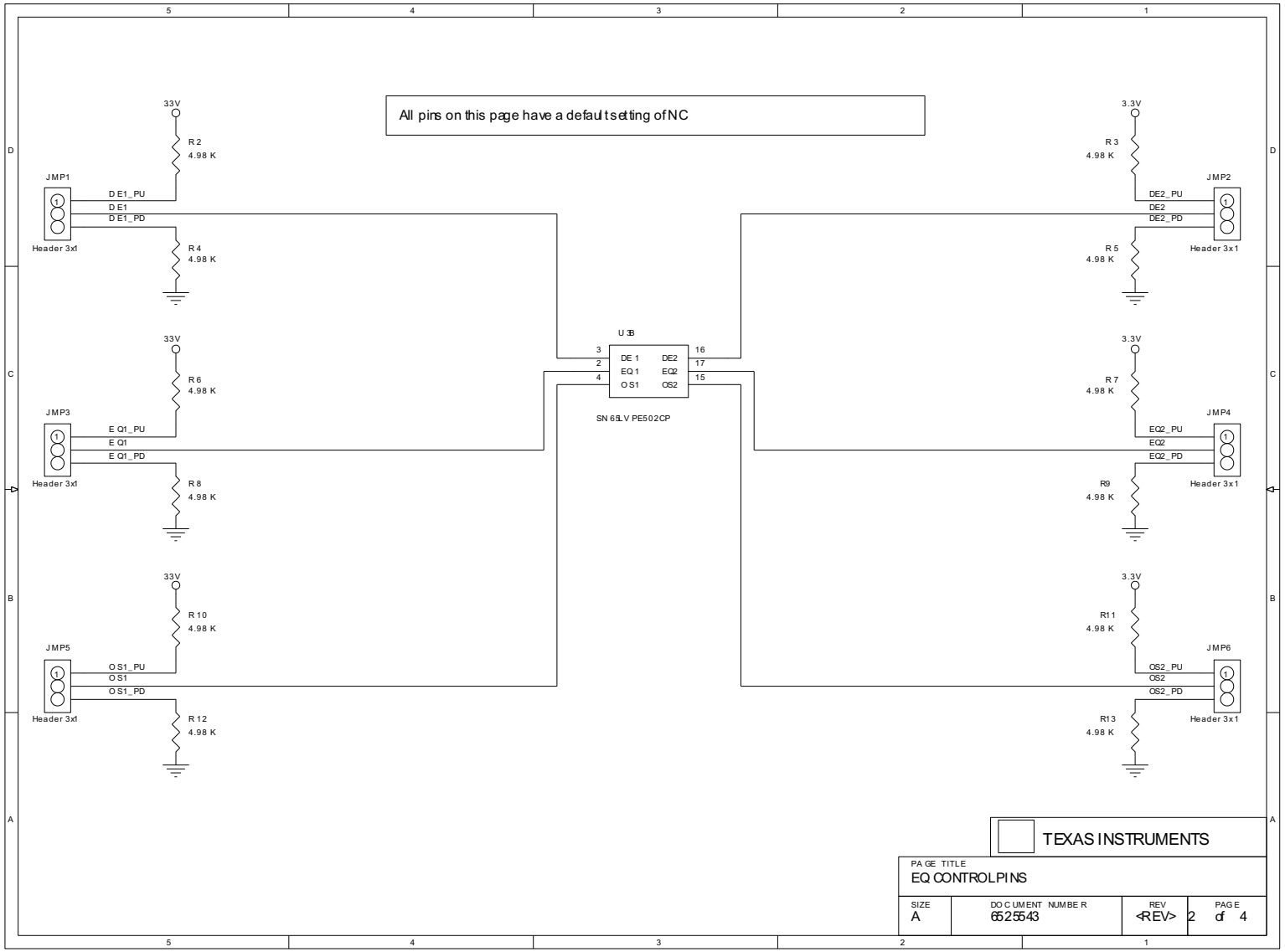

Figure 6. SN65LVPE502CP EVM Schematic (TX and RX Control Pins)

Copyright © 2011, Texas Instruments Incorporated

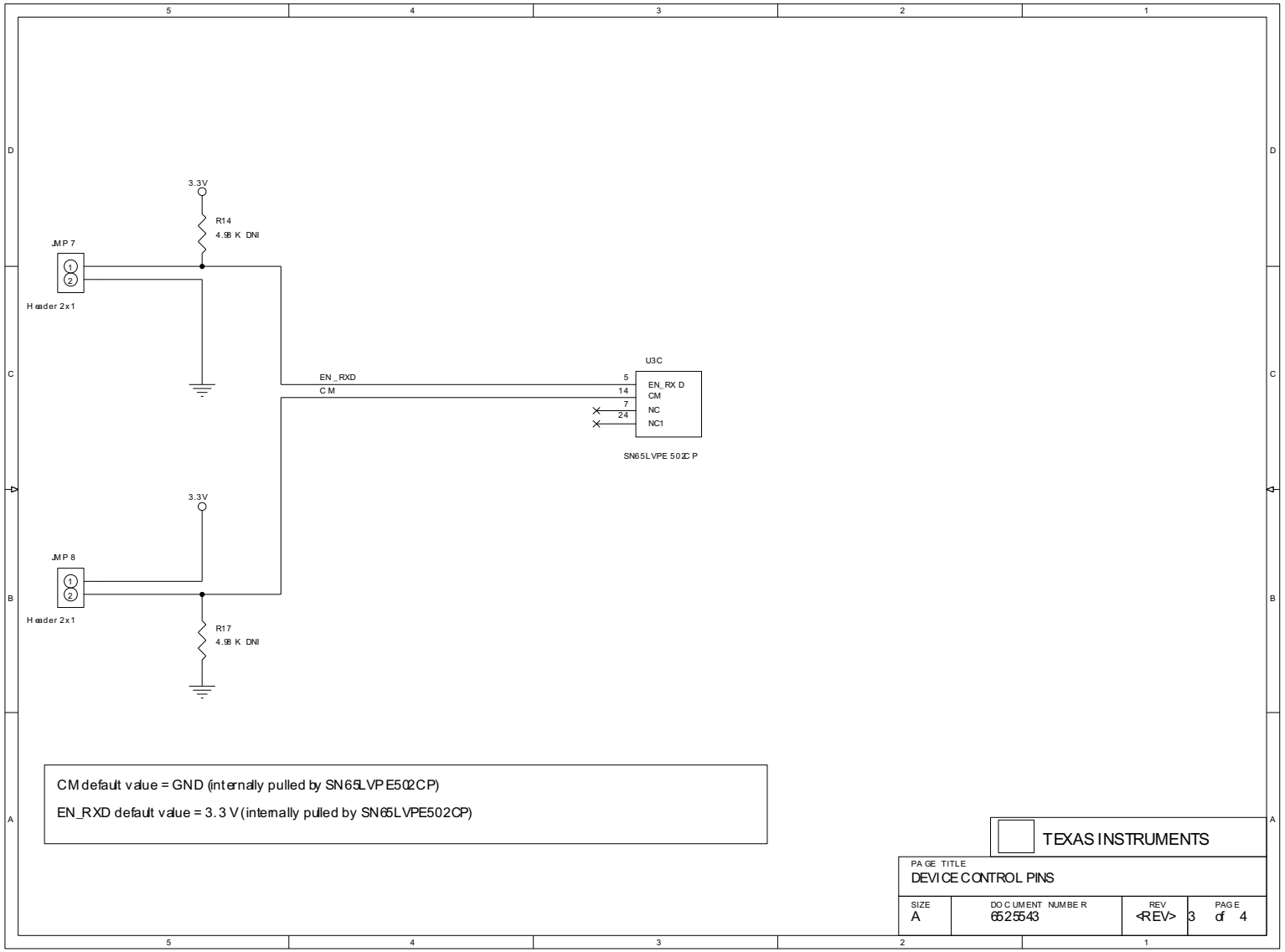

Figure 7. SN65LVPE502CP EVM Schematic (Device Control Pins)

Copyright © 2011, Texas Instruments Incorporated

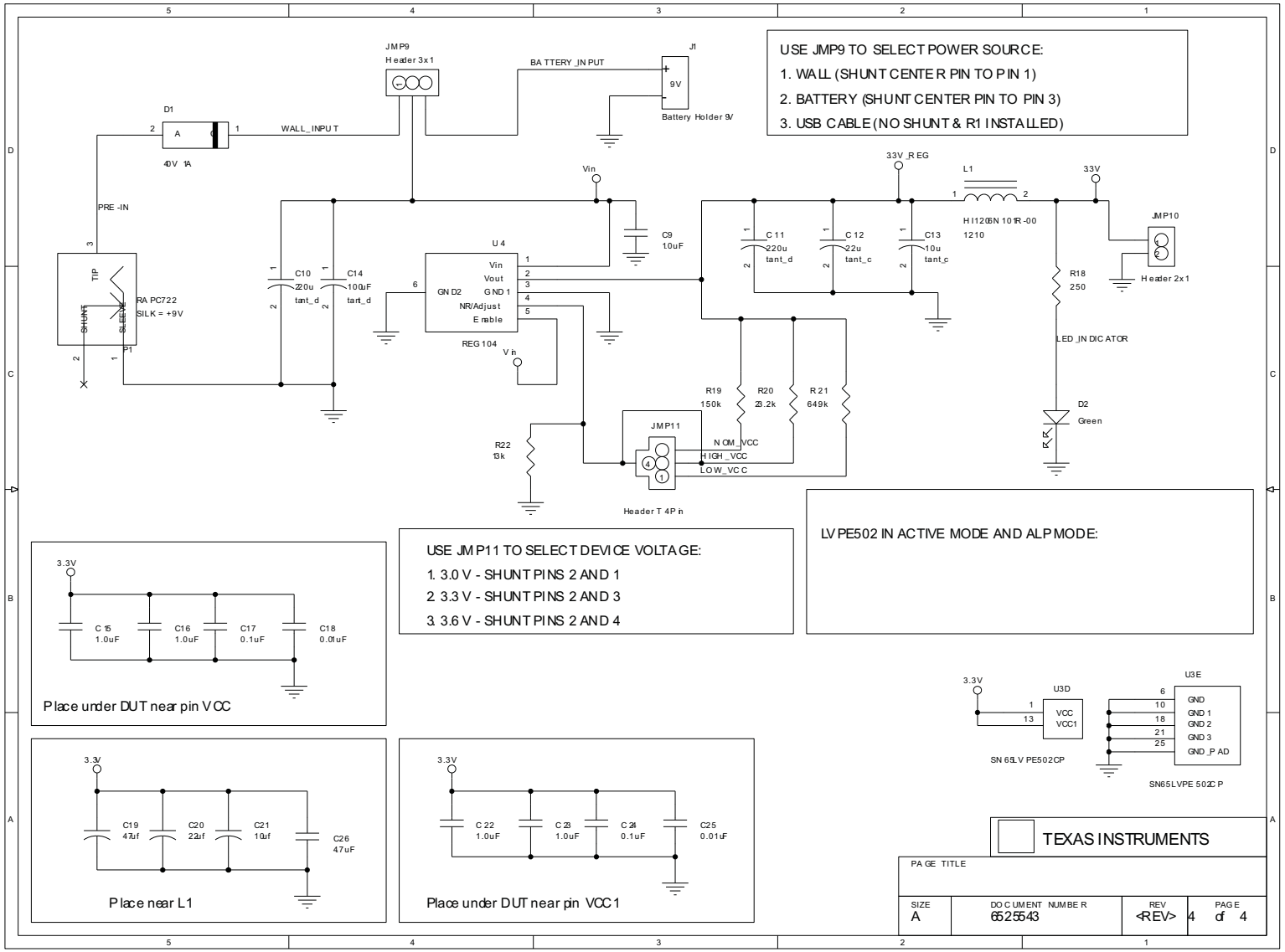

Figure 8. SN65LVPE502CP EVM Schematic (Power and GND Pins)

Copyright © 2011, Texas Instruments Incorporated

2 SN65LVPE502CP EVM Board Layout

This EVM was designed to show the implementation of this device on a 6-layer board.

Copyright © 2011, Texas Instruments Incorporated

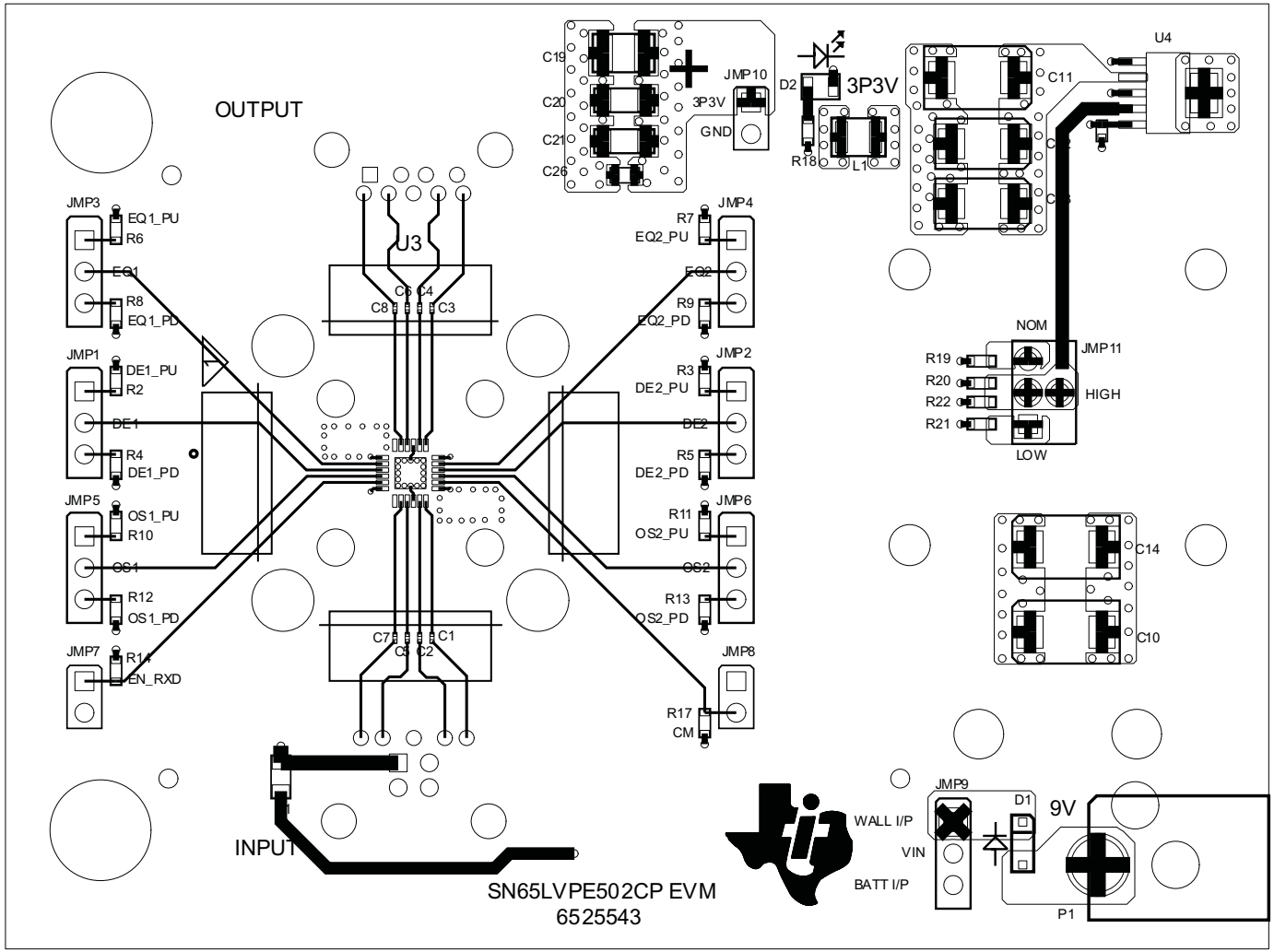

Figure 9. SN65LVPE502CP EVM Layout Layer 1 (Top)

Copyright © 2011, Texas Instruments Incorporated

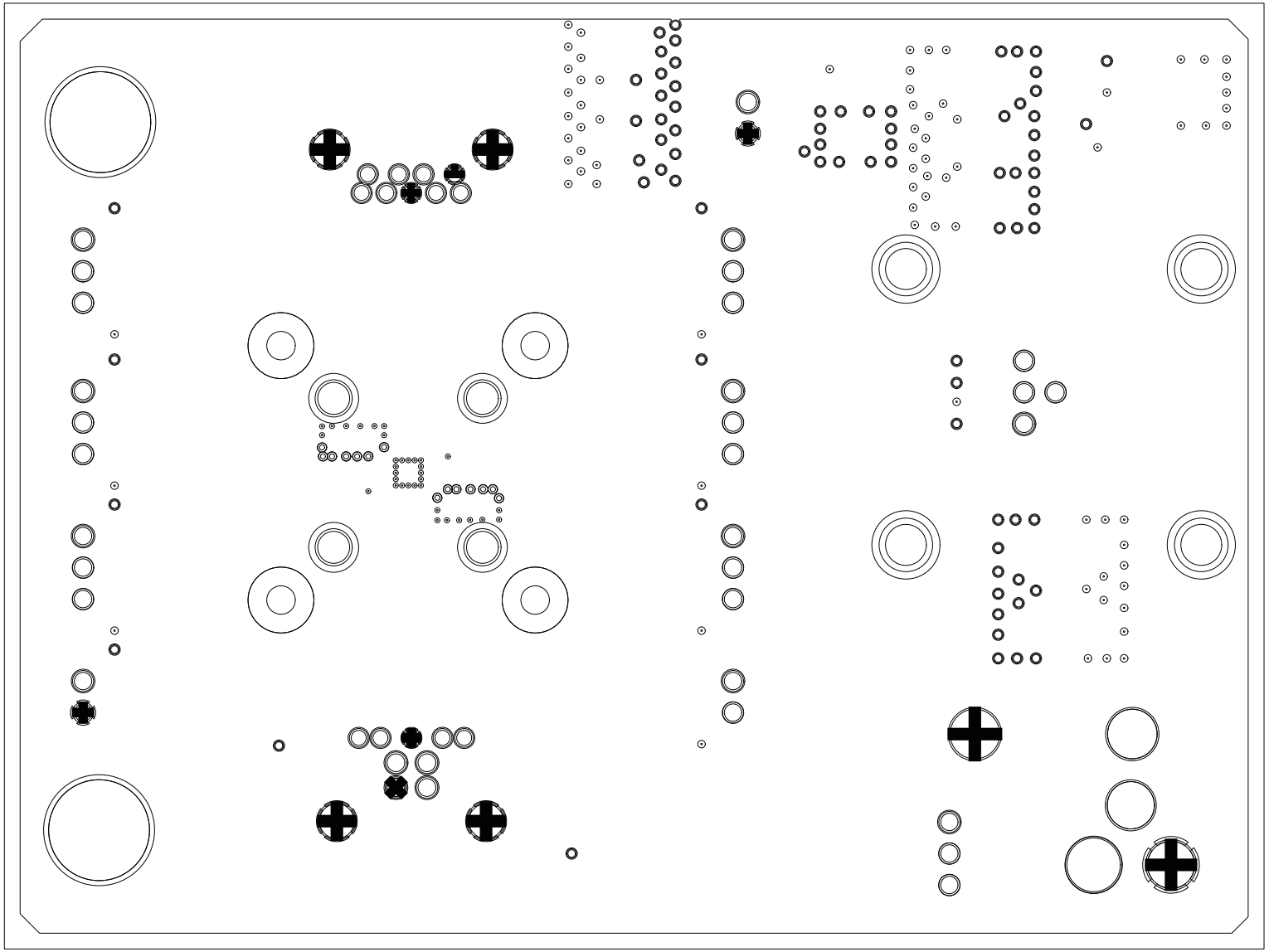

Figure 10. SN65LVPE502CP EVM Layout Layer 2 (GND)

Copyright © 2011, Texas Instruments Incorporated

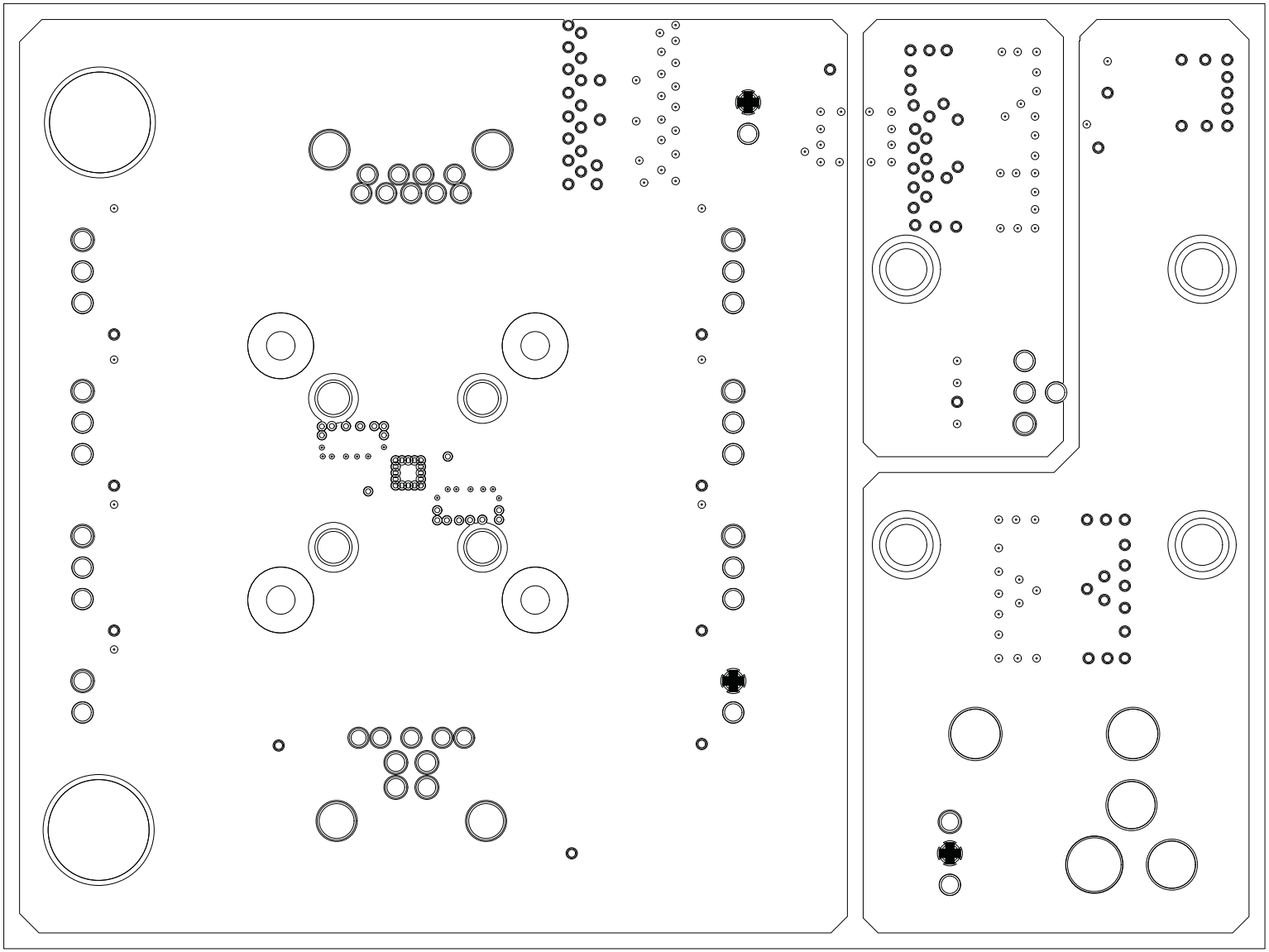

Figure 11. SN65LVPE502CP EVM Layout Layer 3 (VCC)

Copyright © 2011, Texas Instruments Incorporated

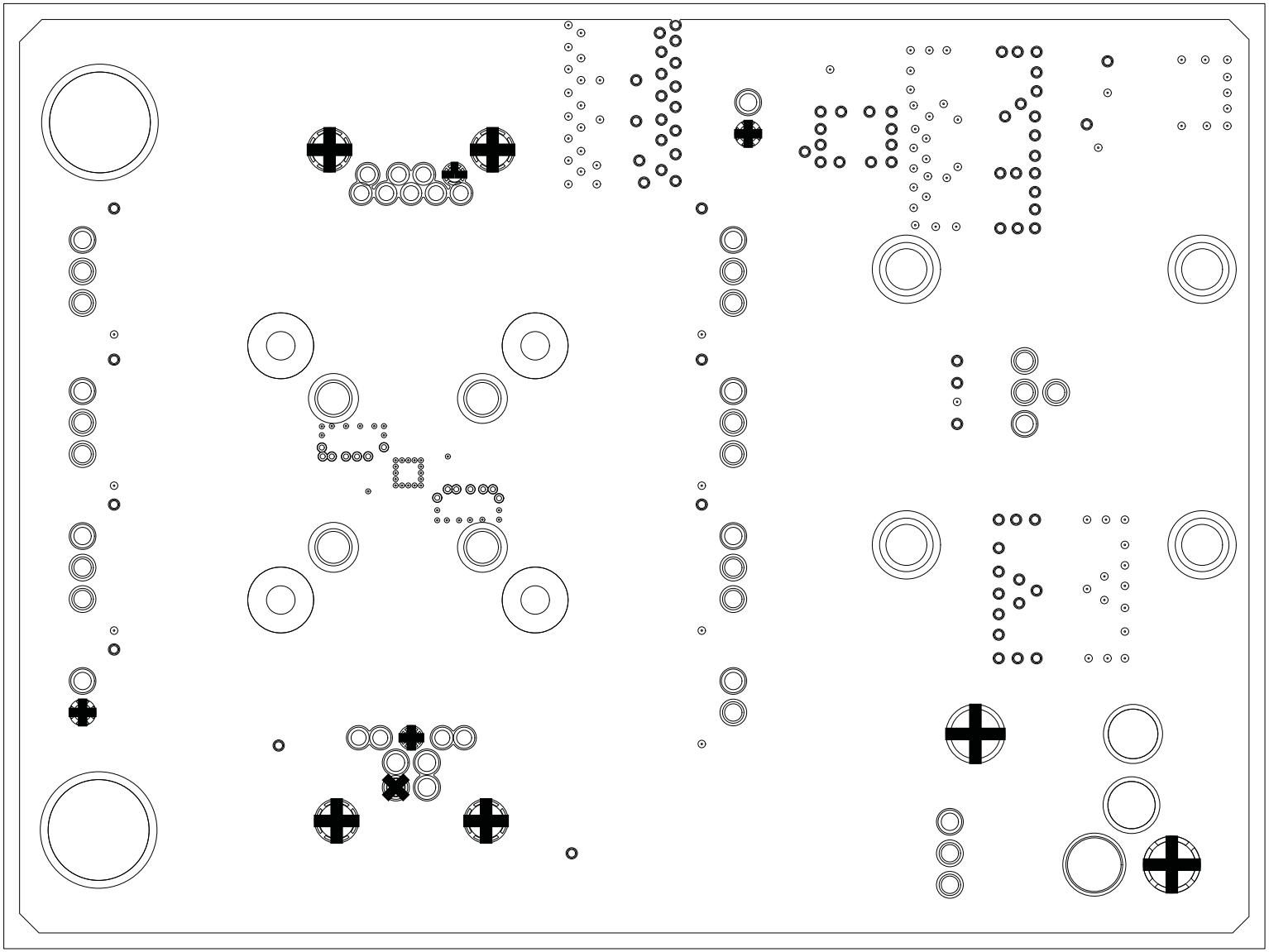

Figure 12. SN65LVPE502CP EVM Layout Layer 4 (GND)

Copyright © 2011, Texas Instruments Incorporated

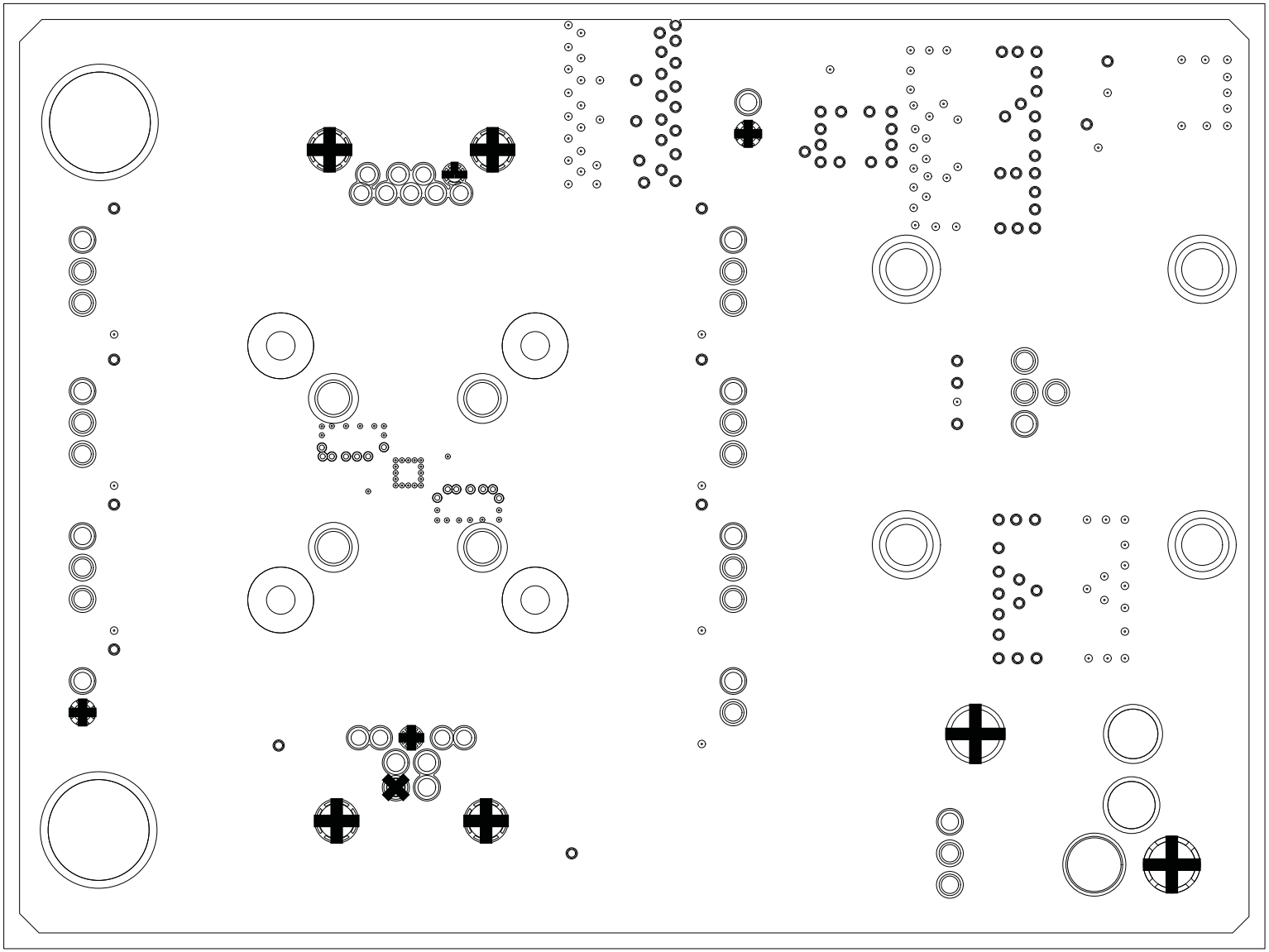

Figure 13. SN65LVPE502CP EVM Layout Layer 5 (GND)

Copyright © 2011, Texas Instruments Incorporated

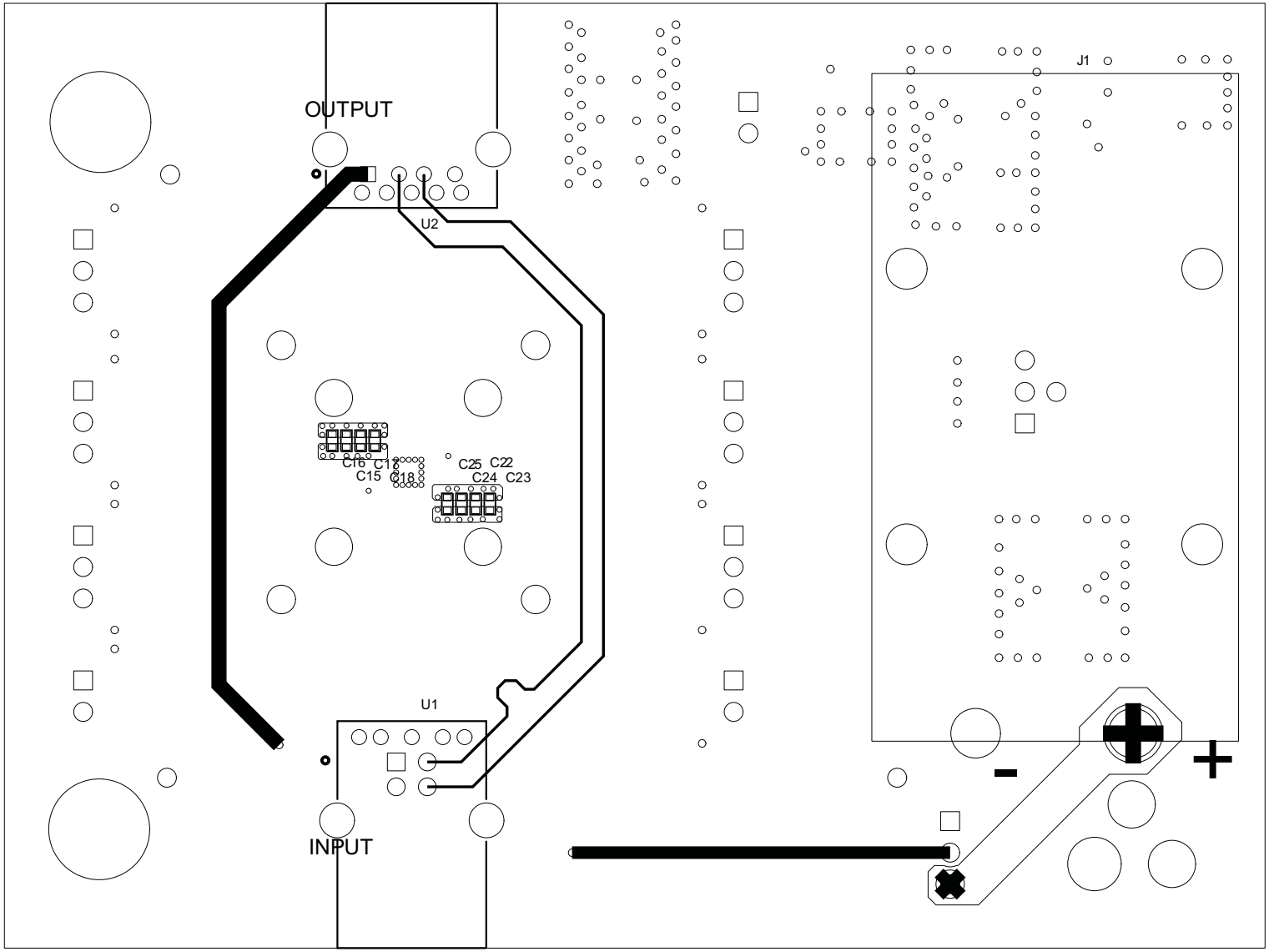

Figure 14. SN65LVPE502CP EVM Layout Layer 6 (Bottom)

Copyright © 2011, Texas Instruments Incorporated

3 SN65LVPE502CP EVM Board Construction

The SN65LVPE502CP EVM board is a 6-layer board constructed of FR4 – TurboClad 370 material. The board stackup consists of a signal layer on top, a ground layer, a power layer, two ground layers and a signal layer on bottom.

If you require the SN65LVPE502CP and your USB 3.0 connector on the same surface of your system board, you will need to use vias on one of your high-speed USB lines. However, you can avoid the use of vias to connect the SN65LVPE502CP and your USB 3.0 connector if you follow these steps:

1. The SN65LVPE502CP and your USB 3.0 connector are placed on opposite surfaces of your system board.
2. Have the TX2± and RX1± side of the SN65LVPE502CP directly face your USB 3.0 connector.
3. Route your USB 3.0 connector to TX2± and RX1± of the SN65LVPE502CP.

To compensate for our specific Board Fabricator's process, we targeted impedance that is slightly less than 45 Ω single-ended to yield a board whose actual impedance is as close to 45 Ω single-ended as possible. Check with your board fabricator for their specific recommendations when determining the proper trace width and core thickness. A differential routing scheme that creates a 90-Ω impedance between the differential traces could have also been implemented equally as well with this device.

	Subclass Name	Type	Material	Thickness (MIL)	Conductivity (mho/cm)	Dielectric Constant	Loss Tangent	Negative Artwork	Shield	Width (MIL)
1		SURFACE	AIR							
2	TOP	CONDUCTOR	COPPER	1.968	595900	1.000000	0	☐		9.00
3		DIELECTRIC	FR-4	5	0	4.300000	0.035			
4	L2_GND	PLANE	COPPER	1.378	595900	4.300000	0.035	☐	☒	
5		DIELECTRIC	FR-4	8	0	4.300000	0.035			
6	L3_VCC	PLANE	COPPER	1.378	595900	4.300000	0.035	☐	☒	
7		DIELECTRIC	FR-4	28	0	4.300000	0.035			
8	L4_GND	PLANE	COPPER	1.378	595900	4.300000	0.035	☐	☒	
9		DIELECTRIC	FR-4	8	0	4.300000	0.035			
10	L5_GND	PLANE	COPPER	1.378	595900	4.300000	0.035	☐	☒	
11		DIELECTRIC	FR-4	5	0	4.300000	0.035			
12	BOTTOM	CONDUCTOR	COPPER	1.968	595900	1.000000	0	☐		9.00
13		SURFACE	AIR							

Figure 15. SN65LVPE502CP EVM Layer Stack-Up

NOTE: In order to achieve the desired impedance, it is recommended that you consult your board manufacturer for their process and design requirements.

Copyright © 2011, Texas Instruments Incorporated

Copyright © 2011, Texas Instruments Incorporated

Appendix A SN65LVPE502CP EVM Bill of Materials

This appendix contains the SN65LVPE502CP EVM BOM (see Table 3).

Copyright © 2011, Texas Instruments Incorporated

Table 3. Bill of Materials

Item	Quantity	Value	Reference	Manufacturer	Part Number
1	4	0.1µF	C1, C2, C6, C8	Venkel	C0201X5R6R3-104KNE
2	2	0.01µF	C18, C25	Venkel	C0402X7R500-103KNE
3	2	0.1µF	C17, C24	Venkel	C0402X7R160-104KNE
4	5	1.0µF	C9, C15, C16, C22, C23	Venkel	C0402X5R6R3-105KNE
5	1	4.7µF	C26	Venkel	C0603X5R6R3-475KNE
6	1	10µF	C21	Venkel	C1206X7R160-106KNE
7	1	22µF	C20	Murata Electronics North America	GRM32ER71C226KE18L
8	1	47µF	C19	Taiyo Yuden	EMK325BJ476MM-T
9	1	10µF	C13	Kemet	T491C106K016AT
10	1	22µF	C12	Kemet	T494C226K025AT
11	1	100µF	C14	Kemet	T495X107K025ZTE150
12	2	220µF	C10, C11	Kemet	B45197A3227K509
13	1	13.0K	R22	Venkel	CR0603-10W-1302FT
14	1	150K	R19	Venkel	CR0603-16W-1503FT
15	1	23.2K	R20	Panasonic - Ecg	ERJ-3EKF2322V
16	1	249	R18	Yageo America	RC0603FR-07249RL
17	12	4.99K	R2, R3, R4, R5, R6, R7, R8, R9, R10, R11, R12, R13	Venkel	CR0603-16W-4991FT
18	1	64.9K	R21	Panasonic - Ecg	ERJ-3EKF6492V
19	1	100	L1	Steward	HI1206N101R-10
20	1	1N5819HW-7-F	D1	Diodes Inc	1N5819HW-7-F
21	1	LED - Green Clear	D2	Lite-On Inc	LTST-C170KGKT
22	1	SN65LVPE502CP	U3	Texas Instruments	SN65LVPE502CP
23	1	REG104GA-A	U4	Texas Instruments	REG104GA-A
24	7	1 X 3	JMP1, JMP2, JMP3, JMP4, JMP5, JMP6, JMP9	Samtec	HTSW-150-07-G-S
25	3	1 X 2	JMP7, JMP8, JMP10	Samtec	HTSW-150-07-G-S
26	1	1 X 1	JMP11	Samtec	HTSW-150-07-G-S
27	1	1 X 3	JMP11	Samtec	HTSW-150-07-G-S
28	1	USB 3.0 - A Type	U1	Main Super Enterprises Co., Ltd.	AK2SA009K1
29	1	USB 3.0 - B Type	U2	Main Super Enterprises Co., Ltd.	AK4AA009K1
30	1	Power Jack	P1	Cui Inc	PJ-002AH
31	1	1294	J1	Keystone Electronics	1294
32	10	Shunt	NOTE	Kobiconn	151-8000-E
33	6	4-40/0.25"	Screws	Building Fasteners	PMSSS 440 0025 PH
34	2	0.75"	Standoff	Keystone Electronics	2029
35	4	4/40 Nut	Nuts for Battery Holder	Building Fasteners	HNZ440
36	2	DNI	R14, R17		
37	1	DNI	R1		

Copyright © 2011, Texas Instruments Incorporated

IMPORTANT NOTICE

Texas Instruments Incorporated and its subsidiaries (TI) reserve the right to make corrections, modifications, enhancements, improvements, and other changes to its products and services at any time and to discontinue any product or service without notice. Customers should obtain the latest relevant information before placing orders and should verify that such information is current and complete. All products are sold subject to TI's terms and conditions of sale supplied at the time of order acknowledgment.

TI warrants performance of its hardware products to the specifications applicable at the time of sale in accordance with TI's standard warranty. Testing and other quality control techniques are used to the extent TI deems necessary to support this warranty. Except where mandated by government requirements, testing of all parameters of each product is not necessarily performed.

TI assumes no liability for applications assistance or customer product design. Customers are responsible for their products and applications using TI components. To minimize the risks associated with customer products and applications, customers should provide adequate design and operating safeguards.

TI does not warrant or represent that any license, either express or implied, is granted under any TI patent right, copyright, mask work right, or other TI intellectual property right relating to any combination, machine, or process in which TI products or services are used. Information published by TI regarding third-party products or services does not constitute a license from TI to use such products or services or a warranty or endorsement thereof. Use of such information may require a license from a third party under the patents or other intellectual property of the third party, or a license from TI under the patents or other intellectual property of TI.

Reproduction of TI information in TI data books or data sheets is permissible only if reproduction is without alteration and is accompanied by all associated warranties, conditions, limitations, and notices. Reproduction of this information with alteration is an unfair and deceptive business practice. TI is not responsible or liable for such altered documentation. Information of third parties may be subject to additional restrictions.

Resale of TI products or services with statements different from or beyond the parameters stated by TI for that product or service voids all express and any implied warranties for the associated TI product or service and is an unfair and deceptive business practice. TI is not responsible or liable for any such statements.

TI products are not authorized for use in safety-critical applications (such as life support) where a failure of the TI product would reasonably be expected to cause severe personal injury or death, unless officers of the parties have executed an agreement specifically governing such use. Buyers represent that they have all necessary expertise in the safety and regulatory ramifications of their applications, and acknowledge and agree that they are solely responsible for all legal, regulatory and safety-related requirements concerning their products and any use of TI products in such safety-critical applications, notwithstanding any applications-related information or support that may be provided by TI. Further, Buyers must fully indemnify TI and its representatives against any damages arising out of the use of TI products in such safety-critical applications.

TI products are neither designed nor intended for use in military/aerospace applications or environments unless the TI products are specifically designated by TI as military-grade or "enhanced plastic." Only products designated by TI as military-grade meet military specifications. Buyers acknowledge and agree that any such use of TI products which TI has not designated as military-grade is solely at the Buyer's risk, and that they are solely responsible for compliance with all legal and regulatory requirements in connection with such use.

TI products are neither designed nor intended for use in automotive applications or environments unless the specific TI products are designated by TI as compliant with ISO/TS 16949 requirements. Buyers acknowledge and agree that, if they use any non-designated products in automotive applications, TI will not be responsible for any failure to meet such requirements.

Following are URLs where you can obtain information on other Texas Instruments products and application solutions:

Products		**Applications**	
Audio	www.ti.com/audio	Communications and Telecom	www.ti.com/communications
Amplifiers	amplifier.ti.com	Computers and Peripherals	www.ti.com/computers
Data Converters	dataconverter.ti.com	Consumer Electronics	www.ti.com/consumer-apps
DLP® Products	www.dlp.com	Energy and Lighting	www.ti.com/energy
DSP	dsp.ti.com	Industrial	www.ti.com/industrial
Clocks and Timers	www.ti.com/clocks	Medical	www.ti.com/medical
Interface	interface.ti.com	Security	www.ti.com/security
Logic	logic.ti.com	Space, Avionics and Defense	www.ti.com/space-avionics-defense
Power Mgmt	power.ti.com	Transportation and Automotive	www.ti.com/automotive
Microcontrollers	microcontroller.ti.com	Video and Imaging	www.ti.com/video
RFID	www.ti-rfid.com	Wireless	www.ti.com/wireless-apps
RF/IF and ZigBee® Solutions	www.ti.com/lprf		
	TI E2E Community Home Page		e2e.ti.com

Mailing Address: Texas Instruments, Post Office Box 655303, Dallas, Texas 75265
Copyright © 2011, Texas Instruments Incorporated