3.3V ECL Differential LVPECL/LVDS to LVTTL/LVCMOS Translator

Check for Samples: SN65EPT23

FEATURES

- **Dual 3.3 V Differential LVPECL/LVDS to LVTTL/LVCMOS Buffer Translator**
- **24 mA LVTTL Ouputs**
- **Operating Range**
  - **V_{CC} = 3.0 V to 3.6 V**
  - **GND = 0 V**
- **Support for Clock Frequencies > 300 MHz**
- **2.0 ns Typical Propagation Delay**
- **Built-in Temperature Compensation**
- **Drop in Compatible to MC100EPT23**

APPLICATIONS

- **Data and Clock Transmission Over Backplane**
- **Signaling Level Conversion for Clock or Data**

DESCRIPTION

The SN65EPT23 is a low power dual LVPECL/LVDS to LVTTL/LVCMOS translator device. The device includes circuitry to maintain inputs at Vcc/2 when left open. The SN65EPT23 is housed in an industry standard SOIC-8 package and is also available in TSSOP-8 option.

PINOUT ASSIGNMENT

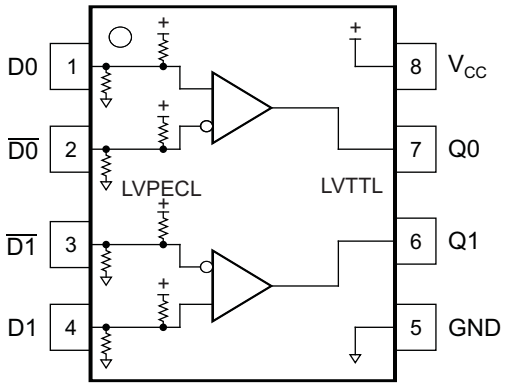

Table 1. PIN DESCRIPTION

PIN	FUNCTION
Q_0, Q_1	LVTTL/LVCMOS Outputs
D_0, $\overline{D}_0$, D_1, $\overline{D}_1$	Differential LVPECL/LVDS/CML Inputs
V_{CC}	Positive Supply
GND	Ground
EP	Exposed pad must be connected to a sufficient thermal conduit. Electrically connect to the most negative supply or leave floating open.

ORDERING INFORMATION(1)

PART NUMBER	PART MARKING	PACKAGE	LEAD FINISH
SN65EPT23D/DR	EPT23	SOIC	NiPdAu
SN65EPT23DGK/DGKR	SSTI	MSOP	NiPdAu

(1) Leaded device option not initially available; contact TI sales representative for further information.

Please be aware that an important notice concerning availability, standard warranty, and use in critical applications of Texas Instruments semiconductor products and disclaimers thereto appears at the end of this data sheet.

PRODUCTION DATA information is current as of publication date. Products conform to specifications per the terms of the Texas Instruments standard warranty. Production processing does not necessarily include testing of all parameters.

Copyright © 2009, Texas Instruments Incorporated

This integrated circuit can be damaged by ESD. Texas Instruments recommends that all integrated circuits be handled with appropriate precautions. Failure to observe proper handling and installation procedures can cause damage.

ESD damage can range from subtle performance degradation to complete device failure. Precision integrated circuits may be more susceptible to damage because very small parametric changes could cause the device not to meet its published specifications.

ABSOLUTE MAXIMUM RATINGS

PARAMETER	CONDITION	VALUE	UNIT
Absolute supply voltage, V_{CC}	GND = 0V	3.8	V
Absolute input voltage, V_I	GND = 0 and Vi ≤ V_{CC}	0 to 3.8	V
Output current	Continuous	50	mA
	Surge	100	
Operating temperature range		–40 to 85	°C
Storage temperature range		–65 to 150	°C

POWER DISSIPATION RATINGS

PACKAGE	CIRCUIT BOARD MODEL	POWER RATING T_A < 25°C (mW)	THERMAL RESISTANCE, JUNCTION TO AMBIENT NO AIRFLOW	DERATING FACTOR T_A > 25°C (mW/°C)	POWER RATING T_A = 85°C (mW)
SOIC	Low-K	719	139	7	288
	High-K	840	119	8	336
MSOP	Low-K	469	213	5	188
	High-K	527	189	5	211

THERMAL CHARACTERISTICS

PARAMETER		PACKAGE	VALUE	UNIT
θ_{JB}	Junction-to Board Thermal Resistance	SOIC	79	°C/W
		MSOP	120	
θ_{JC}	Junction-to Case Thermal Resistance	SOIC	98	°C/W
		MSOP	74	

KEY ATTRIBUTES

CHARACTERISTICS	VALUE
Moisture sensitivity level	Level 1
Flammability rating (Oxygen Index: 28 to 34)	UL 94 V-0 at 0.125 in
ESD-HBM	2 kV
ESD-machine model	200 V
ESD-charge device model	2 kV
Internal pull down resistor	50 kΩ
Internal pull up resistor	50 kΩ
Meets or exceeds JEDEC Spec EIA/JESD78 latchup test	

Copyright © 2009, Texas Instruments Incorporated

LVTTL OUTPUT DC CHARACTERISTICS[1] (V_{CC} = 3.3 V; GND = 0 V, TA = -40C to 85C)[2]

PARAMETER		CONDITION	–40°C			25°C			85°C			UNIT
			MIN	TYP	MAX	MIN	TYP	MAX	MIN	TYP	MAX	
I_{OS}	Output short circuit current		–180	–140	–50	-180	–144	–50	–180	–148	–50	mA
V_{OH}	Output high voltage[3]	I_{OH} = –3.0 mA	2.4			2.4			2.4			V
V_{OL}	Output low voltage	I_{OL} = 24 mA			0.5			0.5			0.5	V

(1) Device will meet the specifications after thermal balance has been established when mounted in a socket or printed circuit board with maintained transverse airflow greater than 500 lfpm. Electrical parameters are assured only over the declared operating temperature range. Functional operation of the device exceeding these conditions is not implied. Device specification limit values are applied individually under normal operating conditions and not valid simultaneously.
(2) All values vary 1:1 with Vcc; Vcc can vary ±0.3V
(3) LVTTL output R_L = 500 Ω to GND

LVPECL INPUT DC CHARACTERISTICS[1] (V_{CC} = 3.3 V; GND = 0.0 V)[2]

PARAMETER			–40°C			25°C			85°C			UNIT
			MIN	TYP	MAX	MIN	TYP	MAX	MIN	TYP	MAX	
I_{CCH}	Power supply current (Outputs set to high)			15	25		15	25		15	25	mA
I_{CCL}	Power supply current (Outputs set to low)			15	25		15	25		15	25	mA
V_{IH}	Input high voltage		2075		2420	2075		2420	2075		2420	mV
V_{IL}	Input low voltage		1355		1675	1355		1675	1355		1675	mV
V_{IHCMR}	Input high voltage common mode range (Differential) [3]		1.2		3.3	1.2		3.3	1.2		3.3	V
I_{IH}	Input high current				150			150			150	µA
I_{IL}	Input low current	D	–150			–150			–150		0.5	µA
		$\overline{D}$										

(1) Device will meet the specifications after thermal balance has been established when mounted in a socket or printed circuit board with maintained transverse airflow greater than 500 lfpm. Electrical parameters are assured only over the declared operating temperature range. Functional operation of the device exceeding these conditions is not implied. Device specification limit values are applied individually under normal operating conditions and not valid simultaneously.
(2) Input and output parameters vary 1:1 with V_{CC}. V_{CC} can vary ±0.3 V.
(3) V_{IHCMR} min varies 1:1 with GND, V_{IHCMR} max varies 1:1 with V_{CC}. V_{IHCMR} is referenced to most positive side of differential signal

AC CHARACTERISTICS[1] (V_{CC} = 3.0 V to 3.6 V; GND = 0.0 V)[2] [3]

PARAMETER		–40°C			25°C			85°C			UNIT
		MIN	TYP	MAX	MIN	TYP	MAX	MIN	TYP	MAX	
f_{MAX}	Max switching frequency[4] (Figure 1–Figure 3)	300			300			300			MHz
t_{PLH} / t_{PHL}	Propagation delay low to high; output at 1.5V	1.1	1.3	1.9	1.1	1.3	1.9	1.1	1.3	1.9	ns
T_{SK++}	Output to output skew++			110			110			110	ps
T_{SK--}	Output to output skew- -			110			110			110	ps
T_{SKPP}	Part to part skew [5]			400			400			400	ps
t_{JITTER}	Random clock jitter (RMS)[6]			10			10			10	ps
V_{PP}	Input voltage swing [7]	150		1200	150		1200	150		1200	mV
t_r/t_f	Output rise/fall times (0.8 V – 2.0 V)	250	560	800	250	580	800	250	600	800	ps

(1) Device will meet the specifications after thermal equilibrium has been established when mounted in a test socket or printed circuit board with maintained transverse airflow greater than 500 lfpm. Electrical parameters are assured only over the declared operating temperature range. Functional operation of the device exceeding these conditions is not implied. Device specification limit values are applied individually under normal operating conditions and not valid simultaneously.
(2) Input parameters vary 1:1 with V_{CC}. V_{CC} can vary ±0.3V .
(3) TTL output R_L = 500 Ω to GND and C_L = 20 pF to GND see Figure 4.
(4) F_{max} assures for functionality only; V_{OL} and V_{OH} levels are assured at DC only
(5) Skews are measured between outputs under identical conditions.
(6) Measured with V_{ID} = 1.5 V_{PP} at V_{CM} = 2.0 V and 1.2 V
(7) 200 mV input assured full logic swing at the output.

Copyright © 2009, Texas Instruments Incorporated

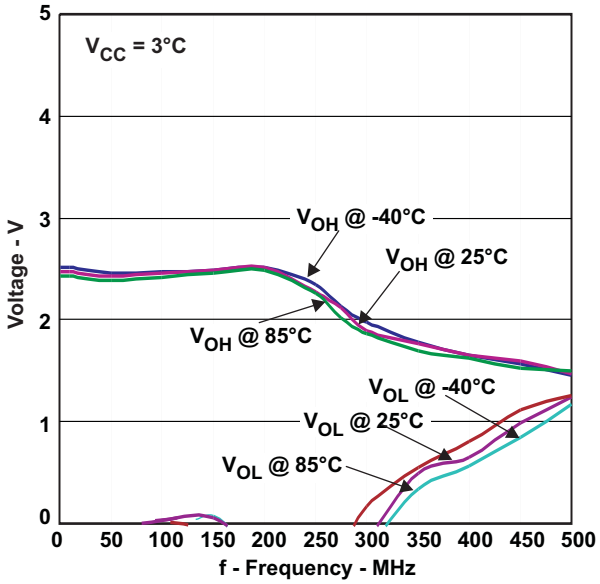

Figure 1. Maximum Switching Frequency V_{CC} = 3.0 V

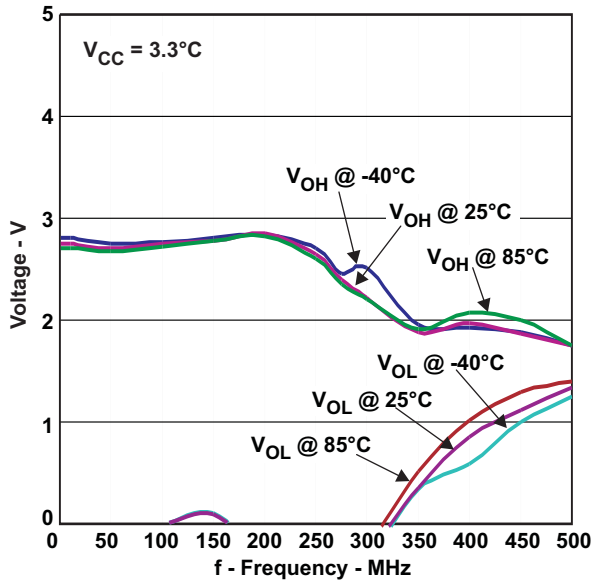

Figure 2. Maximum Switching Frequency V_{CC} = 3.3 V

Copyright © 2009, Texas Instruments Incorporated

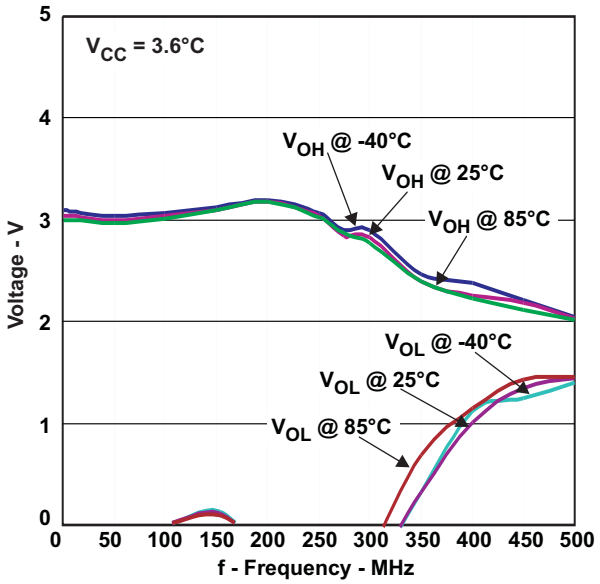

Figure 3. Maximum Switching Frequency V_{CC} = 3.6 V

Typical Output Loading Used for Device Evaluation

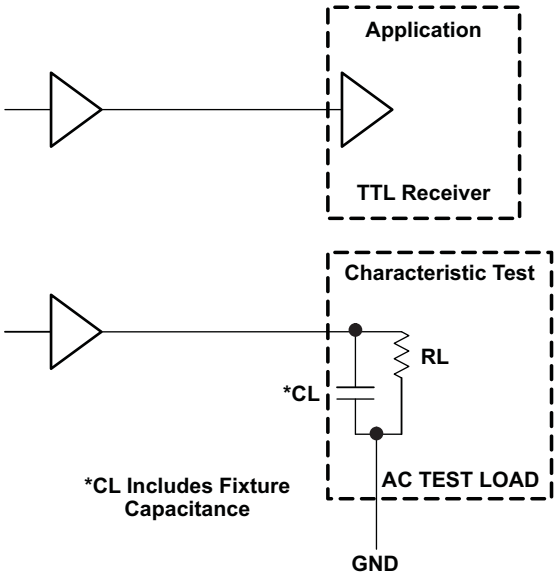

Figure 4. TTL Output Loading Used for Device Evaluation

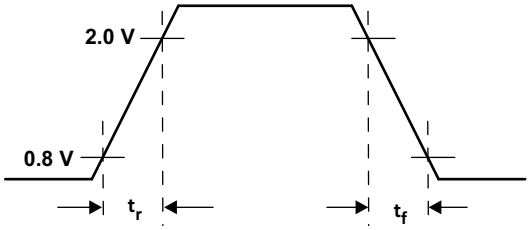

Figure 5. Output Rise and Fall Times

Copyright © 2009, Texas Instruments Incorporated

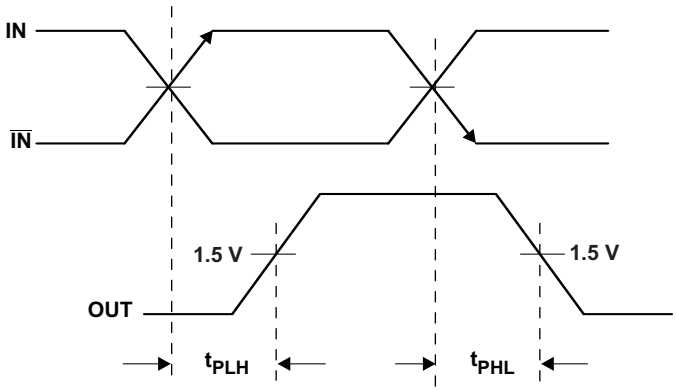

Figure 6. Output Propagation Delay

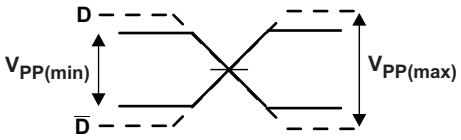

Figure 7. Input Voltage Swing

Copyright © 2009, Texas Instruments Incorporated

PACKAGING INFORMATION

Orderable Device	Status (1)	Package Type	Package Drawing	Pins	Package Qty	Eco Plan (2)	Lead/Ball Finish	MSL Peak Temp (3)
SN65EPT23D	ACTIVE	SOIC	D	8	75	Green (RoHS & no Sb/Br)	CU NIPDAU	Level-1-260C-UNLIM
SN65EPT23DGK	ACTIVE	MSOP	DGK	8	80	Green (RoHS & no Sb/Br)	CU NIPDAU	Level-1-260C-UNLIM
SN65EPT23DGKR	ACTIVE	MSOP	DGK	8	2500	Green (RoHS & no Sb/Br)	CU NIPDAU	Level-1-260C-UNLIM
SN65EPT23DR	ACTIVE	SOIC	D	8	2500	Green (RoHS & no Sb/Br)	CU NIPDAU	Level-1-260C-UNLIM

(1) The marketing status values are defined as follows:
ACTIVE: Product device recommended for new designs.
LIFEBUY: TI has announced that the device will be discontinued, and a lifetime-buy period is in effect.
NRND: Not recommended for new designs. Device is in production to support existing customers, but TI does not recommend using this part in a new design.
PREVIEW: Device has been announced but is not in production. Samples may or may not be available.
OBSOLETE: TI has discontinued the production of the device.

(2) Eco Plan - The planned eco-friendly classification: Pb-Free (RoHS), Pb-Free (RoHS Exempt), or Green (RoHS & no Sb/Br) - please check http://www.ti.com/productcontent for the latest availability information and additional product content details.
TBD: The Pb-Free/Green conversion plan has not been defined.
Pb-Free (RoHS): TI's terms "Lead-Free" or "Pb-Free" mean semiconductor products that are compatible with the current RoHS requirements for all 6 substances, including the requirement that lead not exceed 0.1% by weight in homogeneous materials. Where designed to be soldered at high temperatures, TI Pb-Free products are suitable for use in specified lead-free processes.
Pb-Free (RoHS Exempt): This component has a RoHS exemption for either 1) lead-based flip-chip solder bumps used between the die and package, or 2) lead-based die adhesive used between the die and leadframe. The component is otherwise considered Pb-Free (RoHS compatible) as defined above.
Green (RoHS & no Sb/Br): TI defines "Green" to mean Pb-Free (RoHS compatible), and free of Bromine (Br) and Antimony (Sb) based flame retardants (Br or Sb do not exceed 0.1% by weight in homogeneous material)

(3) MSL, Peak Temp. -- The Moisture Sensitivity Level rating according to the JEDEC industry standard classifications, and peak solder temperature.

Important Information and Disclaimer: The information provided on this page represents TI's knowledge and belief as of the date that it is provided. TI bases its knowledge and belief on information provided by third parties, and makes no representation or warranty as to the accuracy of such information. Efforts are underway to better integrate information from third parties. TI has taken and continues to take reasonable steps to provide representative and accurate information but may not have conducted destructive testing or chemical analysis on incoming materials and chemicals. TI and TI suppliers consider certain information to be proprietary, and thus CAS numbers and other limited information may not be available for release.

In no event shall TI's liability arising out of such information exceed the total purchase price of the TI part(s) at issue in this document sold by TI to Customer on an annual basis.

DGK (S–PDSO–G8) PLASTIC SMALL–OUTLINE PACKAGE

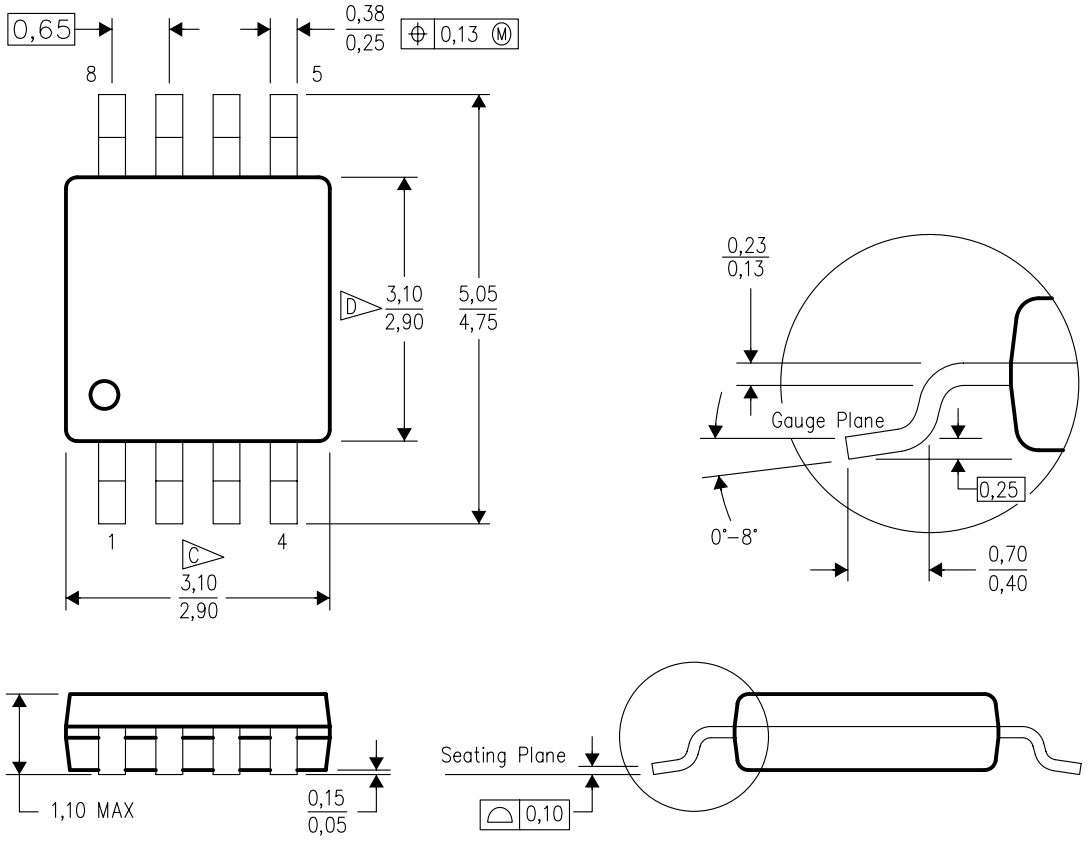

4073329/E 05/06

NOTES:
A. All linear dimensions are in millimeters.
B. This drawing is subject to change without notice.
C. Body length does not include mold flash, protrusions, or gate burrs. Mold flash, protrusions, or gate burrs shall not exceed 0.15 per end.
D. Body width does not include interlead flash. Interlead flash shall not exceed 0.50 per side.
E. Falls within JEDEC MO–187 variation AA, except interlead flash.

D (R–PDSO–G8) PLASTIC SMALL–OUTLINE PACKAGE

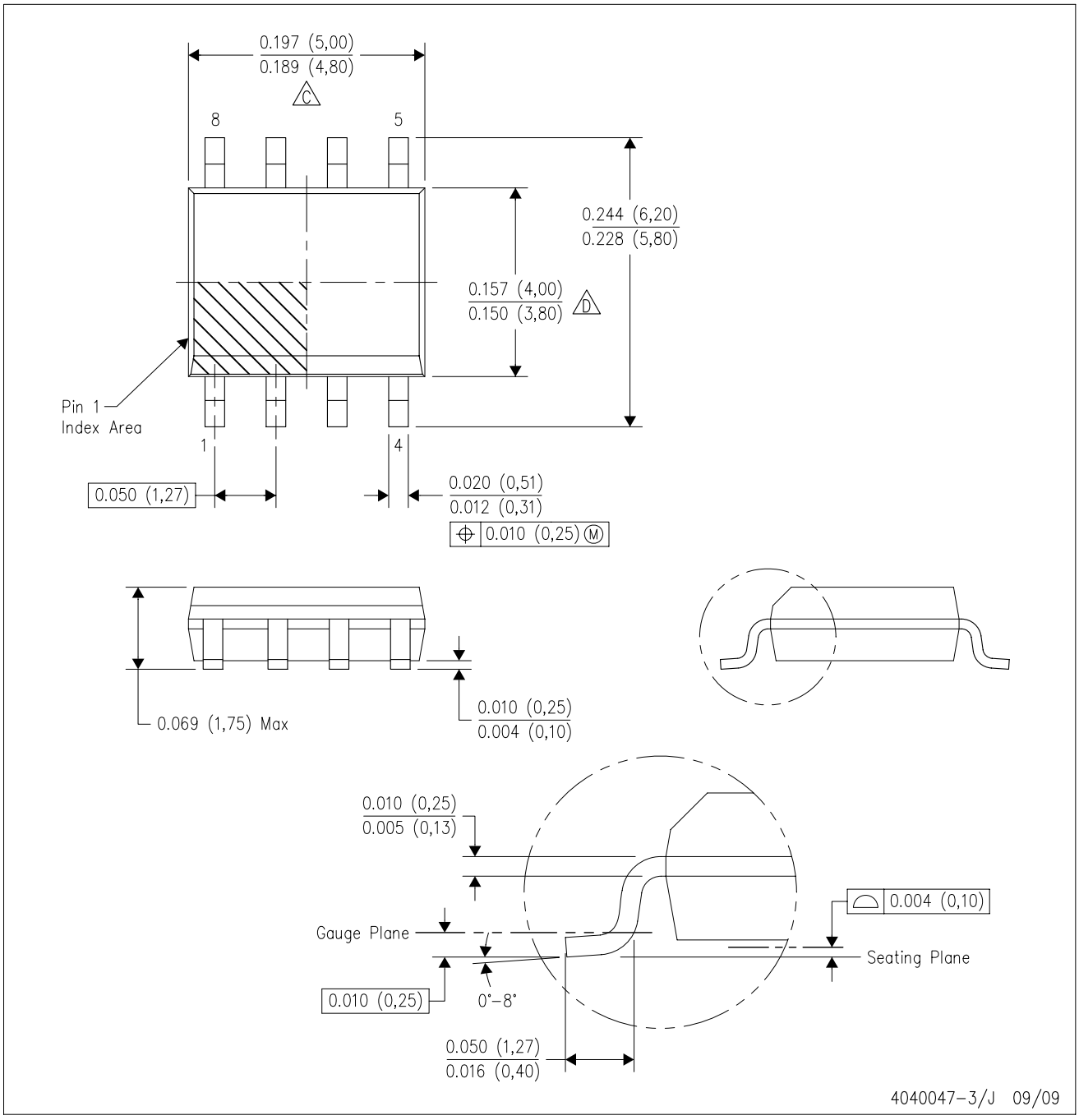

NOTES:
A. All linear dimensions are in inches (millimeters).
B. This drawing is subject to change without notice.
C. Body length does not include mold flash, protrusions, or gate burrs. Mold flash, protrusions, or gate burrs shall not exceed .006 (0,15) per end.
D. Body width does not include interlead flash. Interlead flash shall not exceed .017 (0,43) per side.
E. Reference JEDEC MS–012 variation AA.

IMPORTANT NOTICE

Texas Instruments Incorporated and its subsidiaries (TI) reserve the right to make corrections, modifications, enhancements, improvements, and other changes to its products and services at any time and to discontinue any product or service without notice. Customers should obtain the latest relevant information before placing orders and should verify that such information is current and complete. All products are sold subject to TI's terms and conditions of sale supplied at the time of order acknowledgment.

TI warrants performance of its hardware products to the specifications applicable at the time of sale in accordance with TI's standard warranty. Testing and other quality control techniques are used to the extent TI deems necessary to support this warranty. Except where mandated by government requirements, testing of all parameters of each product is not necessarily performed.

TI assumes no liability for applications assistance or customer product design. Customers are responsible for their products and applications using TI components. To minimize the risks associated with customer products and applications, customers should provide adequate design and operating safeguards.

TI does not warrant or represent that any license, either express or implied, is granted under any TI patent right, copyright, mask work right, or other TI intellectual property right relating to any combination, machine, or process in which TI products or services are used. Information published by TI regarding third-party products or services does not constitute a license from TI to use such products or services or a warranty or endorsement thereof. Use of such information may require a license from a third party under the patents or other intellectual property of the third party, or a license from TI under the patents or other intellectual property of TI.

Reproduction of TI information in TI data books or data sheets is permissible only if reproduction is without alteration and is accompanied by all associated warranties, conditions, limitations, and notices. Reproduction of this information with alteration is an unfair and deceptive business practice. TI is not responsible or liable for such altered documentation. Information of third parties may be subject to additional restrictions.

Resale of TI products or services with statements different from or beyond the parameters stated by TI for that product or service voids all express and any implied warranties for the associated TI product or service and is an unfair and deceptive business practice. TI is not responsible or liable for any such statements.

TI products are not authorized for use in safety-critical applications (such as life support) where a failure of the TI product would reasonably be expected to cause severe personal injury or death, unless officers of the parties have executed an agreement specifically governing such use. Buyers represent that they have all necessary expertise in the safety and regulatory ramifications of their applications, and acknowledge and agree that they are solely responsible for all legal, regulatory and safety-related requirements concerning their products and any use of TI products in such safety-critical applications, notwithstanding any applications-related information or support that may be provided by TI. Further, Buyers must fully indemnify TI and its representatives against any damages arising out of the use of TI products in such safety-critical applications.

TI products are neither designed nor intended for use in military/aerospace applications or environments unless the TI products are specifically designated by TI as military-grade or "enhanced plastic." Only products designated by TI as military-grade meet military specifications. Buyers acknowledge and agree that any such use of TI products which TI has not designated as military-grade is solely at the Buyer's risk, and that they are solely responsible for compliance with all legal and regulatory requirements in connection with such use.

TI products are neither designed nor intended for use in automotive applications or environments unless the specific TI products are designated by TI as compliant with ISO/TS 16949 requirements. Buyers acknowledge and agree that, if they use any non-designated products in automotive applications, TI will not be responsible for any failure to meet such requirements.

Following are URLs where you can obtain information on other Texas Instruments products and application solutions:

Products		**Applications**	
Amplifiers	amplifier.ti.com	Audio	www.ti.com/audio
Data Converters	dataconverter.ti.com	Automotive	www.ti.com/automotive
DLP® Products	www.dlp.com	Communications and Telecom	www.ti.com/communications
DSP	dsp.ti.com	Computers and Peripherals	www.ti.com/computers
Clocks and Timers	www.ti.com/clocks	Consumer Electronics	www.ti.com/consumer-apps
Interface	interface.ti.com	Energy	www.ti.com/energy
Logic	logic.ti.com	Industrial	www.ti.com/industrial
Power Mgmt	power.ti.com	Medical	www.ti.com/medical
Microcontrollers	microcontroller.ti.com	Security	www.ti.com/security
RFID	www.ti-rfid.com	Space, Avionics & Defense	www.ti.com/space-avionics-defense
RF/IF and ZigBee® Solutions	www.ti.com/lprf	Video and Imaging	www.ti.com/video
		Wireless	www.ti.com/wireless-apps

Mailing Address: Texas Instruments, Post Office Box 655303, Dallas, Texas 75265
Copyright © 2010, Texas Instruments Incorporated