SLLS079B – SEPTEMBER 1973 – REVISED MAY 1995

- **Single 5-V Supply**
- **High-Input-Impedance, High-Threshold Receivers**
- **Common Driver Strobe**
- **TTL-Compatible Driver and Strobe Inputs With Clamp Diodes**
- **High-Speed Operation**
- **100-mA Open-Collector Driver Outputs**
- **Four Independent Channels**
- **TTL-Compatible Receiver Output**

**SN55138 . . . J OR W PACKAGE**
**SN75138 . . . D OR N PACKAGE**
**(TOP VIEW)**

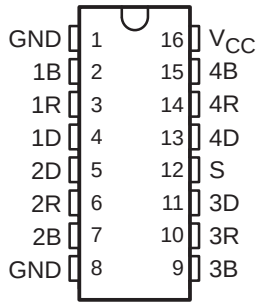


**SN55138 . . . FK PACKAGE**
**(TOP VIEW)**

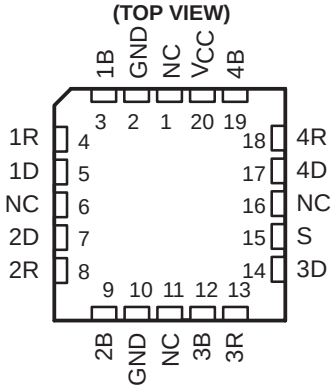


NC – No internal connection

## description

The SN55138 and SN75138 quadruple bus transceivers are designed for two-way data communication over single-ended transmission lines. Each of the four identical channels consists of a driver with TTL inputs and a receiver with a TTL output. The driver open-collector output is designed to handle loads up to 100-mA open collector. The receiver input is internally connected to the driver output, and has a high impedance to minimize loading of the transmission line. Because of the high driver-output current and the high receiver-input impedance, a very large number (typically hundreds) of transceivers may be connected to a single data bus.

The receiver design also features a threshold of 2.3 V (typical), providing a wider noise margin than would be possible with a receiver having the usual TTL threshold. A strobe turns off all drivers (high impedance) but does not affect receiver operation. These circuits are designed for operation from a single 5-V supply and include a provision to minimize loading of the data bus when the power-supply voltage is zero.

The SN55138 is characterized for operation over the full military temperature range of –55°C to 125°C. The SN75138 is characterized for operation from 0°C to 70°C.

Please be aware that an important notice concerning availability, standard warranty, and use in critical applications of Texas Instruments semiconductor products and disclaimers thereto appears at the end of this data sheet.

PRODUCTION DATA information is current as of publication date. Products conform to specifications per the terms of Texas Instruments standard warranty. Production processing does not necessarily include testing of all parameters.

Copyright © 1995, Texas Instruments Incorporated

## Function Tables

**TRANSMITTING**

| INPUTS | | OUTPUTS | |
|---|---|---|---|
| S | D | B | R |
| L | H | L | H |
| L | L | H | L |

**RECEIVING**

| INPUTS | | | OUTPUT |
|---|---|---|---|
| S | B | D | R |
| H | H | X | L |
| H | L | X | H |

H = high level, L = low level, X = irrelevant

## logic symbol†

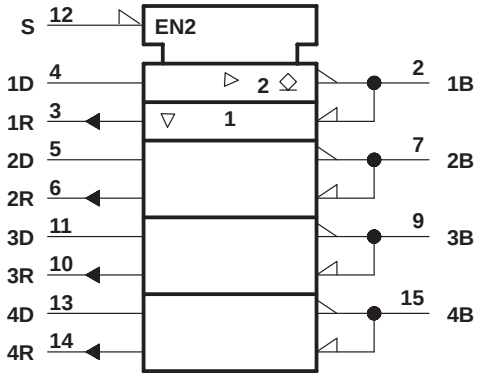


† This symbol is in accordance with ANSI/IEEE Std 91-1984 and IEC Publication 617-12.
Pin numbers shown are for D, J, N, and W packages.

## logic diagram (positive logic)

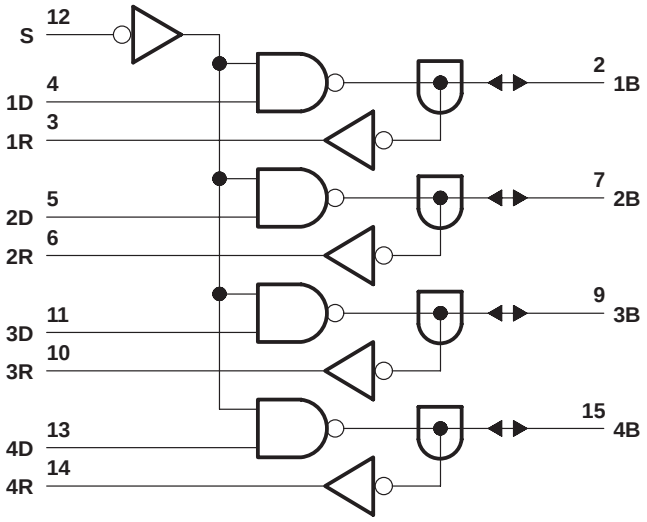


## schematics of inputs and outputs

| EQUIVALENT OF EACH STROBE AND DRIVER INPUT | EQUIVALENT OF EACH RECEIVER INPUT | TYPICAL OF ALL DRIVER OUTPUTS | TYPICAL OF ALL RECEIVER OUTPUTS |
|---|---|---|---|
| 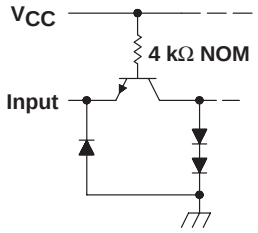 | 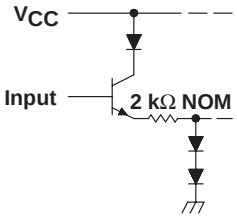 | 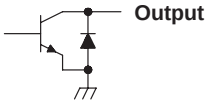 | 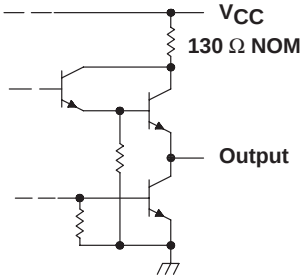 |

## absolute maximum ratings over operating free-air temperature (unless otherwise noted)†

Supply voltage, $V_{CC}$ (see Note 1) . . . . . 7 V
Input voltage, $V_I$ . . . . . 5.5 V
Driver off-state output voltage . . . . . 7 V
Low-level output current into the driver output . . . . . 150 mA
Continuous total dissipation . . . . . See Dissipation Rating Table
Operating free-air temperature range, $T_A$: SN55138 . . . . . –55°C to 125°C
SN75138 . . . . . 0°C to 70°C
Storage temperature range, $T_{stg}$ . . . . . –65°C to 150°C
Lead temperature 1,6 mm (1/16 inch) from case for 10 seconds: D, N, or W package . . . . . 260°C
Case temperature for 60 seconds, $T_C$: FK package . . . . . 260°C
Lead temperature 1,6 mm (1/16 inch) from case for 60 seconds: J package . . . . . 300°C

† Stresses beyond those listed under "absolute maximum ratings" may cause permanent damage to the device. These are stress ratings only, and functional operation of the device at these or any other conditions beyond those indicated under "recommended operating conditions" is not implied. Exposure to absolute-maximum-rated conditions for extended periods may affect device reliability.

NOTE 1: All voltage values are with respect to both ground terminals connected together.

**DISSIPATION RATING TABLE**

| PACKAGE | $T_A \le 25°C$ POWER RATING | DERATING FACTOR ABOVE $T_A = 25°C$ | $T_A = 70°C$ POWER RATING | $T_A = 125°C$ POWER RATING |
|---|---|---|---|---|
| D | 950 mW | 7.6 mW/°C | 608 mW | — |
| FK‡ | 1375 mW | 11.0 mW/°C | 880 mW | 275 mW |
| J‡ | 1375 mW | 11.0 mW/°C | 880 mW | 275 mW |
| N | 1150 mW | 9.2 mW/°C | 736 mW | — |
| W | 1000 mW | 8.0 mW/°C | 640 mW | 200 mW |

‡ In the FK and J packages, the SN55138 chip is alloy mounted.

## recommended operating conditions

| | | SN55138 | | | SN75138 | | | UNIT |
|---|---|---|---|---|---|---|---|---|
| | | MIN | NOM | MAX | MIN | NOM | MAX | |
| Supply voltage, $V_{CC}$ | | 4.5 | | 5.5 | 4.75 | 5 | 5.25 | V |
| High-level input voltage, $V_{IH}$ | Driver or strobe | 2 | | | 2 | | | V |
| | Receiver | 3.2 | | | 2.9 | | | |
| Low-level input voltage, $V_{IL}$ | Driver or strobe | | | 0.8 | | | 0.8 | V |
| | Receiver | | | 1.5 | | | 1.8 | |
| High-level output current, $I_{OH}$ | Receiver output | | | –400 | | | –400 | μA |
| Low-level output current, $I_{OL}$ | Driver output | | | 100 | | | 100 | mA |
| | Receiver output | | | 16 | | | 16 | |
| Operating free-air temperature, $T_A$ | | –55 | | 125 | 0 | | 70 | °C |

## electrical characteristics over recommended operating free-air temperature range (unless otherwise noted)

| PARAMETER | | | TEST CONDITIONS† | | SN55138 | | | SN75138 | | | UNIT |
|---|---|---|---|---|---|---|---|---|---|---|---|
| | | | | | MIN | TYP‡ | MAX | MIN | TYP‡ | MAX | |
| $V_{IK}$ | Input clamp voltage | Driver or strobe | $V_{CC}$ = MIN, | $I_I$ = –12 mA | | | –1.5 | | | –1.5 | V |
| $V_{OH}$ | High-level output voltage | Receiver | $V_{CC}$ = MIN, $V_{IL(R)}$ = $V_{IL}$ max, | $V_{IH(S)}$ = 2 V, $I_{OH}$ = –400 µA | 2.4 | 3.5 | | 2.4 | 3.5 | | V |
| $V_{OL}$ | Low-level output voltage | Driver | $V_{CC}$ = MIN, $V_{IL(S)}$ = 0.8 V, | $V_{IH(D)}$ = 2 V, $I_{OL}$ = 100 mA | | | 0.45 | | | 0.45 | V |
| | | Receiver | $V_{CC}$ = MIN, $V_{IH(S)}$ = 2 V, | $V_{IH(R)}$ = $V_{IH}$ min, $I_{OL}$ = 16 mA | | | 0.4 | | | 0.4 | |
| $I_I$(max) | Input current at maximum input voltage | Driver or strobe | $V_{CC}$ = MAX, | $V_I$ = $V_{CC}$ | | | 1 | | | 1 | mA |
| $I_{IH}$ | High-level input current | Driver or strobe | $V_{CC}$ = MAX, | $V_I$ = 2.4 V | | | 40 | | | 40 | µA |
| | | Receiver | $V_{CC}$ = 5 V, $V_{I(S)}$ = 2 V | $V_{I(R)}$ = 4.5 V, | | 25 | 300 | | 25 | 300 | |
| $I_{IL}$ | Low-level input current | Driver or strobe | $V_{CC}$ = MAX, | $V_I$ = 0.4 V | | –1 | –1.6 | | –1 | –1.6 | mA |
| | | Receiver | $V_{CC}$ = MAX, $V_{I(S)}$ = 2 V | $V_{I(R)}$ = 0.45 V, | | | –50 | | | –50 | µA |
| $I_{I(off)}$ | Input current with power off | Receiver | $V_{CC}$ = 0, | $V_I$ = 4.5 V | | 1.1 | 1.5 | | 1.1 | 1.5 | mA |
| $I_{OS}$ | Short-circuit output current§ | Receiver | $V_{CC}$ = MAX | | –20 | | –55 | –18 | | –55 | mA |
| $I_{CC}$ | Supply current | All driver outputs low | $V_{CC}$ = MAX, $V_{I(S)}$ = 0.8 V | $V_{I(D)}$ = 2 V, | | 50 | 65 | | 50 | 65 | mA |
| | | All driver outputs high | $V_{CC}$ = MAX, $V_{I(S)}$ = 2 V, Receiver outputs open | $V_{I(R)}$ = 3.5 V, | | 42 | 55 | | 42 | 55 | |

† For conditions shown as MIN or MAX, use the appropriate value specified under recommended operating conditions. Parenthetical letters D, R, and S used with $V_I$ refer to the driver input, receiver input, and strobe input, respectively.
‡ All typical values are at $V_{CC}$ = 5 V, $T_A$ = 25°C.
§ Not more than one output should be shorted at a time.

## switching characteristics, $V_{CC}$ = 5 V, $T_A$ = 25°C

| PARAMETER¶ | FROM (INPUT) | TO (OUTPUT) | TEST CONDITIONS | | MIN | TYP | MAX | UNIT |
|---|---|---|---|---|---|---|---|---|
| $t_{PLH}$ | Driver | Driver | $C_L$ = 50 pF, $R_L$ = 50 Ω, | See Figure 1 | | 15 | 24 | ns |
| $t_{PHL}$ | | | | | | 14 | 24 | |
| $t_{PLH}$ | Strobe | Driver | | | | 18 | 28 | ns |
| $t_{PHL}$ | | | | | | 22 | 32 | |
| $t_{PLH}$ | Receiver | Receiver | $C_L$ = 15 pF $R_L$ = 400 Ω, | See Figure 2 | | 7 | 15 | ns |
| $t_{PHL}$ | | | | | | 8 | 15 | |

¶ $t_{PLH}$ = propagation delay time, low- to high-level output
$t_{PHL}$ = propagation delay time, high- to low-level output

## PARAMETER MEASUREMENT INFORMATION

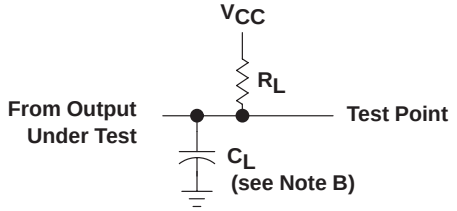


TEST CIRCUIT

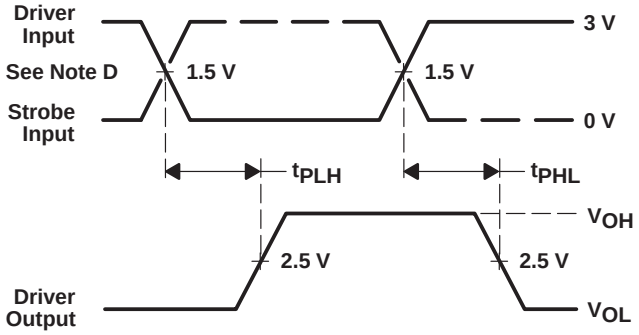


VOLTAGE WAVEFORMS

NOTES: A. Input pulses are supplied by generators having the following characteristics: $t_W$ = 100 ns, PRR ≤ 1 MHz, $t_r$ ≤ 10 ns, $t_f$ ≤ 10 ns, $Z_O$ ≈ 50 Ω.
B. $C_L$ includes probe and jig capacitance.
C. All diodes are 1N916 or 1N3064.
D. When testing driver input (solid line) strobe must be low; when testing strobe input (dashed line) driver input must be high.

**Figure 1. Propagation Delay Times From Data and Strobe Inputs**

## PARAMETER MEASUREMENT INFORMATION

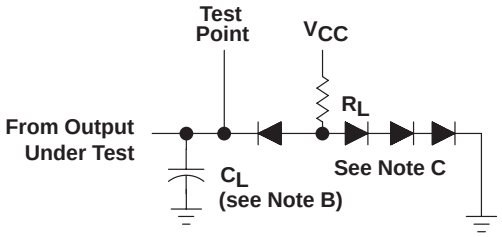


TEST CIRCUIT

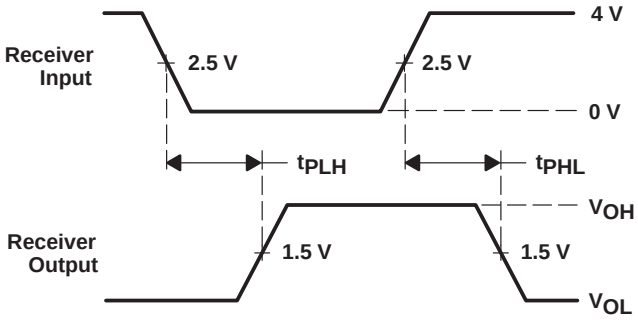


VOLTAGE WAVEFORMS

NOTES: A. Input pulses are supplied by generators having the following characteristics: $t_W$ = 100 ns, PRR ≤ 1 MHz, $t_r$ ≤ 10 ns, $t_f$ ≤ 10 ns, $Z_O$ ≈ 50 Ω.
B. $C_L$ includes probe and jig capacitance.
C. All diodes are 1N916 or 1N3064.
D. When testing driver input (solid line) strobe must be low; when testing strobe input (dashed line) driver input must be high.

**Figure 2. Propagation Delay Times From Receiver Input**

## TYPICAL CHARACTERISTICS†

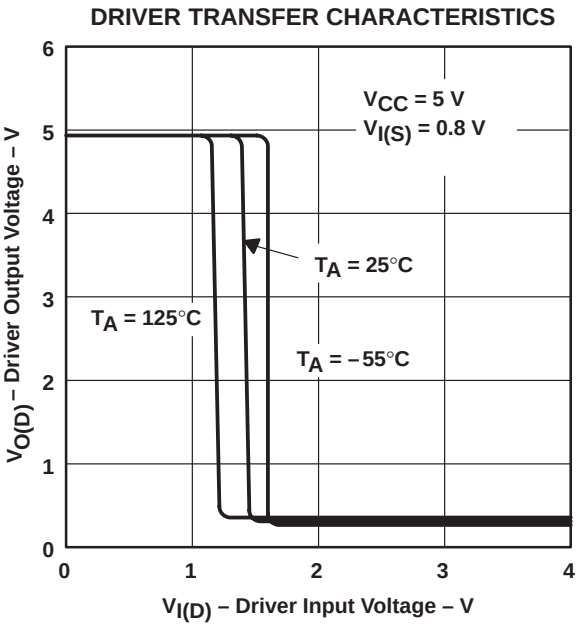


**Figure 3**

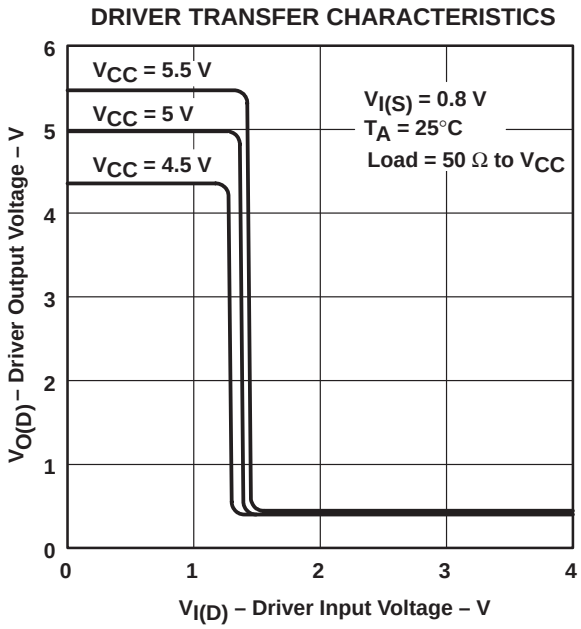


**Figure 4**

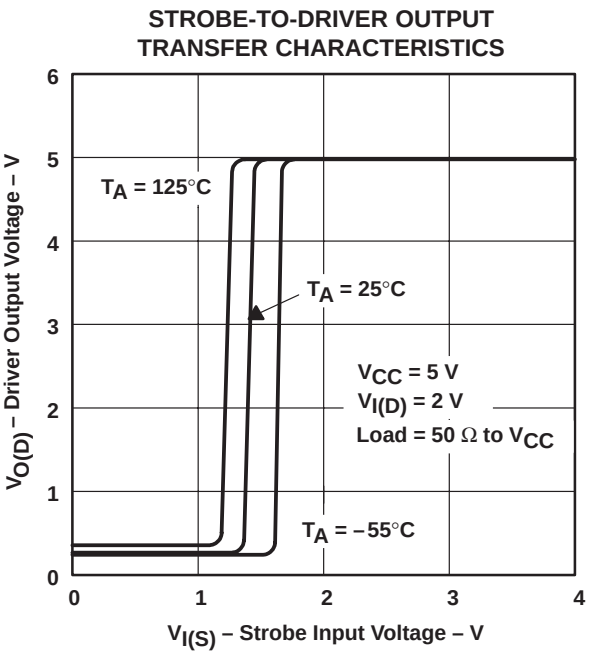


**Figure 5**

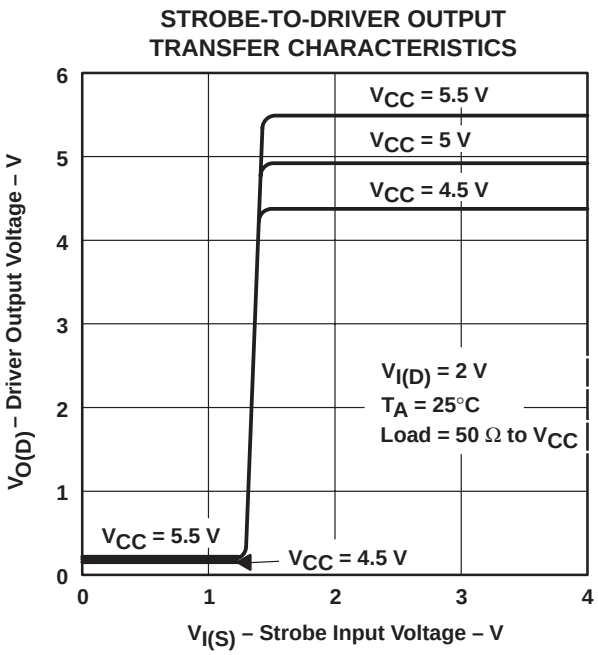


**Figure 6**

† Data for temperatures below 0°C and above 70°C is applicable to SN55138 circuits only.

## TYPICAL CHARACTERISTICS†

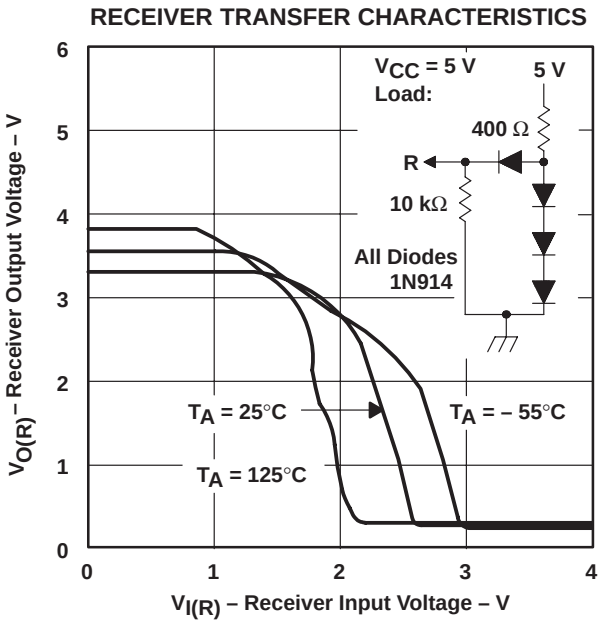


Figure 7

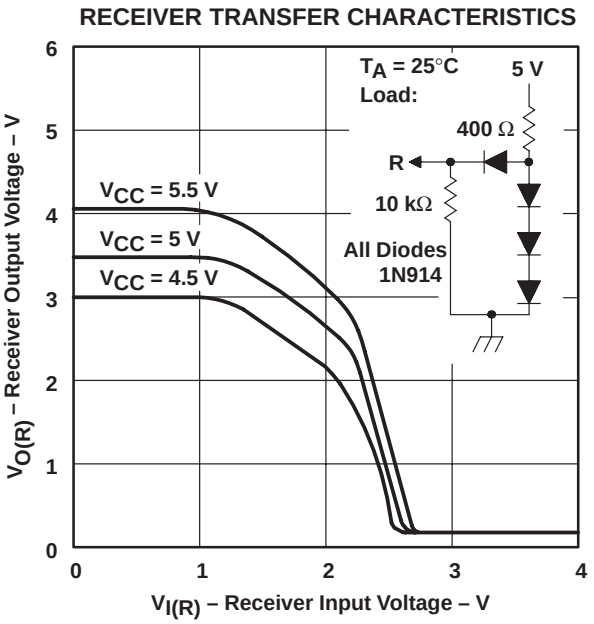


Figure 8

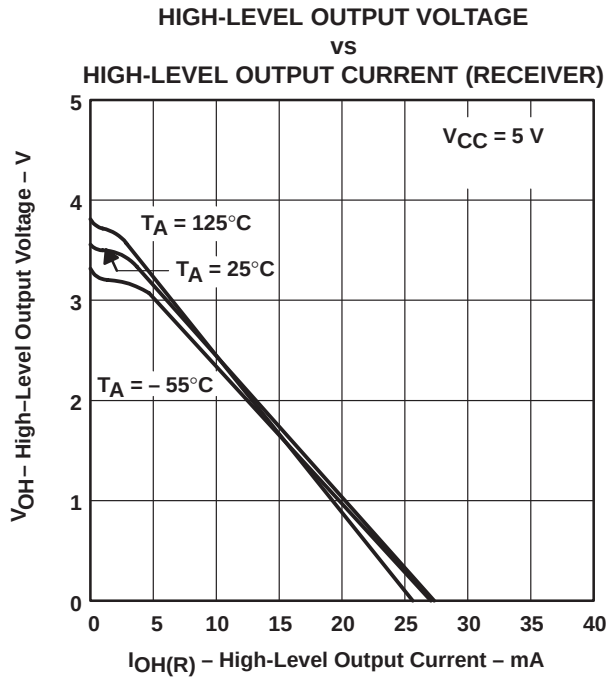


Figure 9

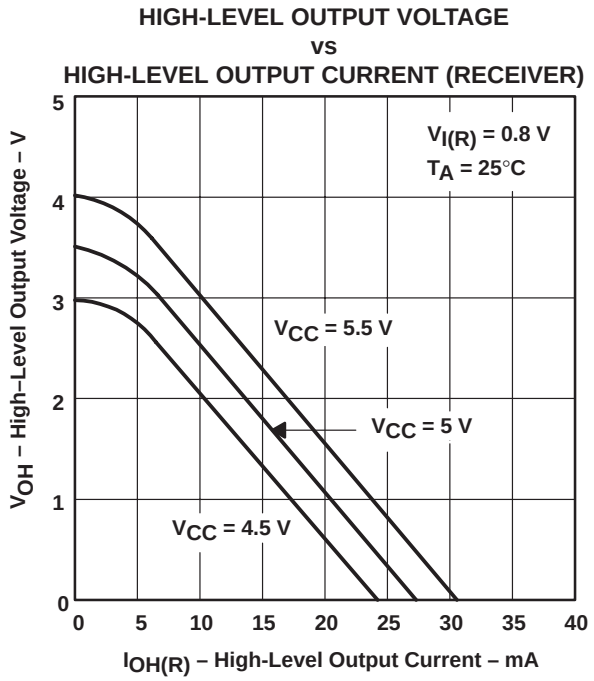


Figure 10

† Data for temperatures below 0°C and above 70°C is applicable to SN55138 circuits only.

## TYPICAL CHARACTERISTICS†

**LOW-LEVEL OUTPUT VOLTAGE vs LOW-LEVEL OUTPUT CURRENT (RECEIVER)**

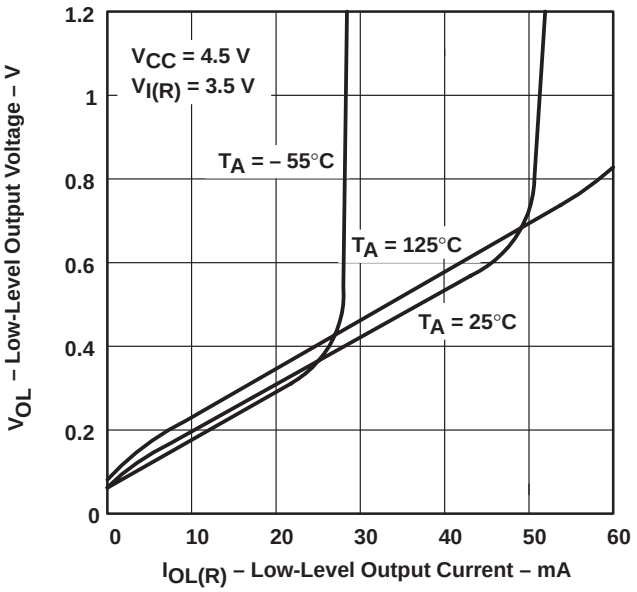


**Figure 11**

**LOW-LEVEL OUTPUT VOLTAGE vs LOW-LEVEL OUTPUT CURRENT (DRIVER)**

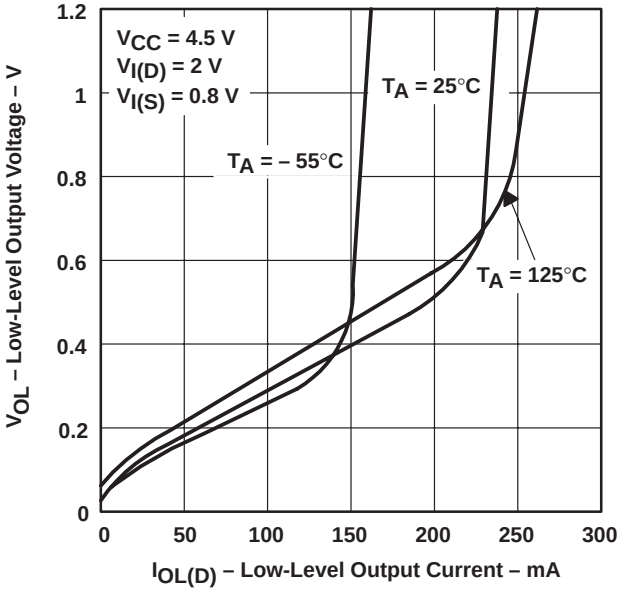


**Figure 12**

**RECEIVER INPUT CURRENT vs RECEIVER INPUT VOLTAGE**

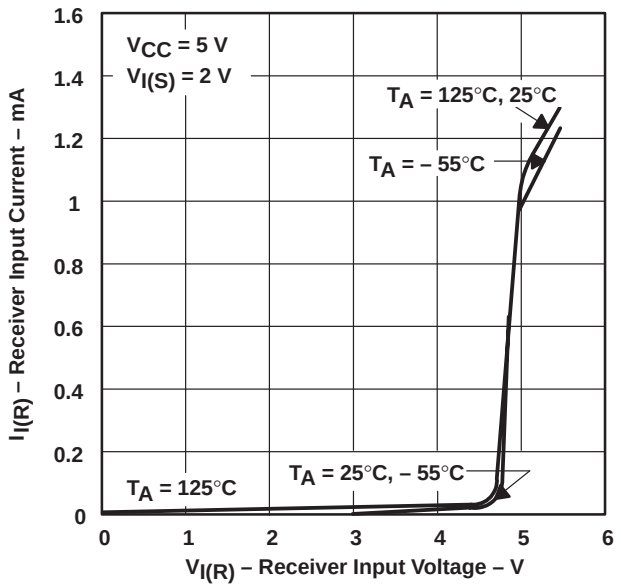


**Figure 13**

**RECEIVER INPUT CURRENT vs RECEIVER INPUT VOLTAGE**

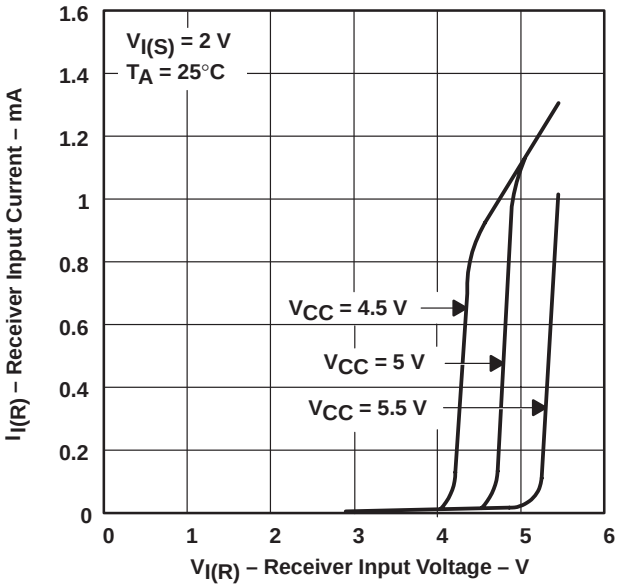


**Figure 14**

† Data for temperatures below 0°C and above 70°C is applicable to SN55138 circuits only.

## TYPICAL CHARACTERISTICS†

**SUPPLY CURRENT vs SUPPLY VOLTAGE (ALL DRIVER OUTPUTS LOW)**

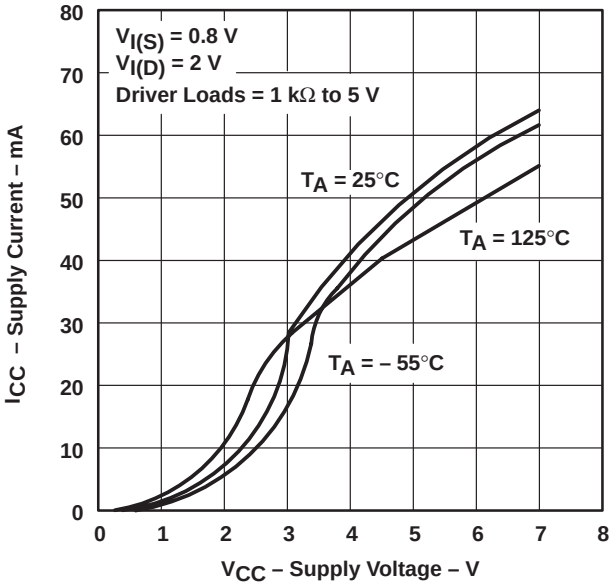


**Figure 15**

**SUPPLY CURRENT vs SUPPLY VOLTAGE**

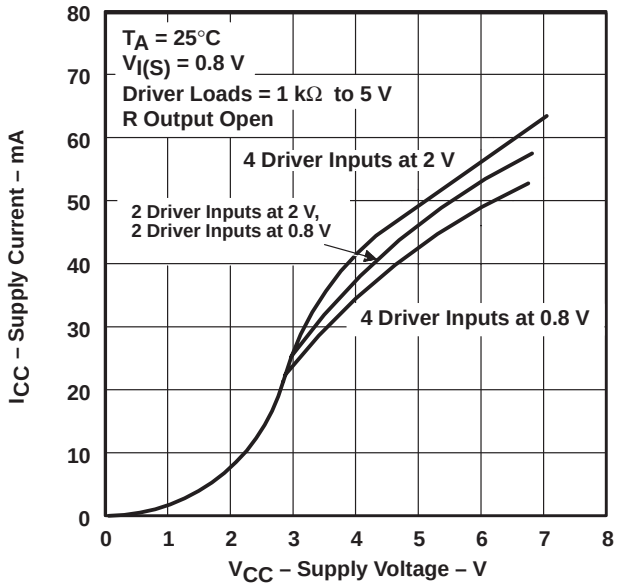


**Figure 16**

**PROPAGATION DELAY TIMES vs FREE-AIR TEMPERATURE**

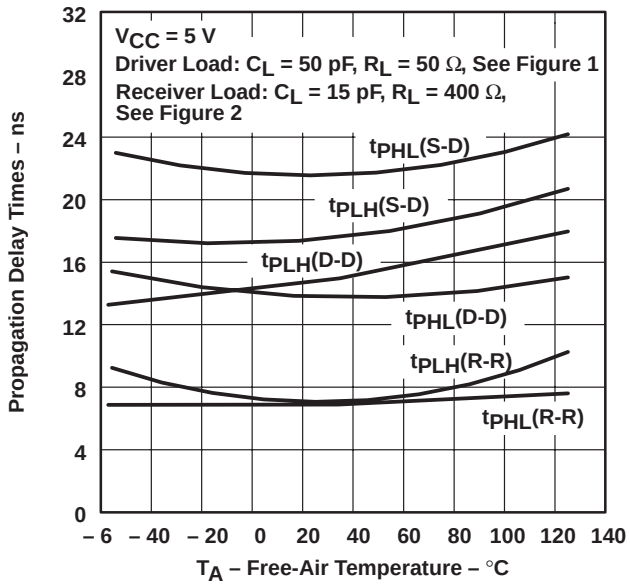


**Figure 17**

**PROPAGATION DELAY TIMES vs SUPPLY VOLTAGE**

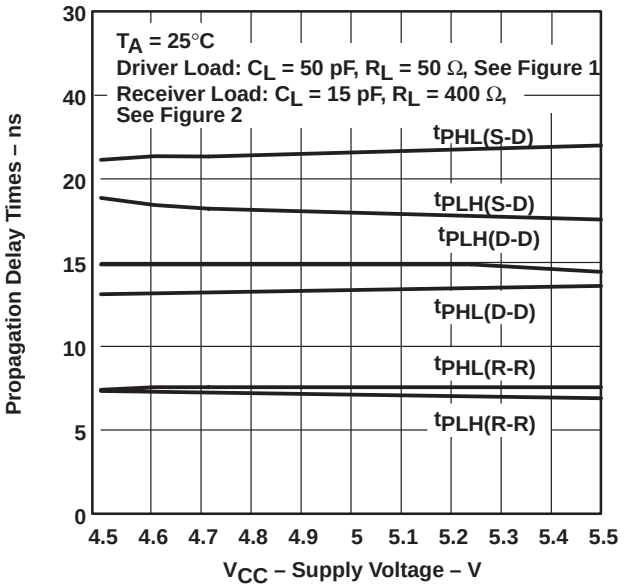


**Figure 18**

† Data for temperatures below 0°C and above 70°C is applicable to SN55138 circuits only.

## TYPICAL CHARACTERISTICS

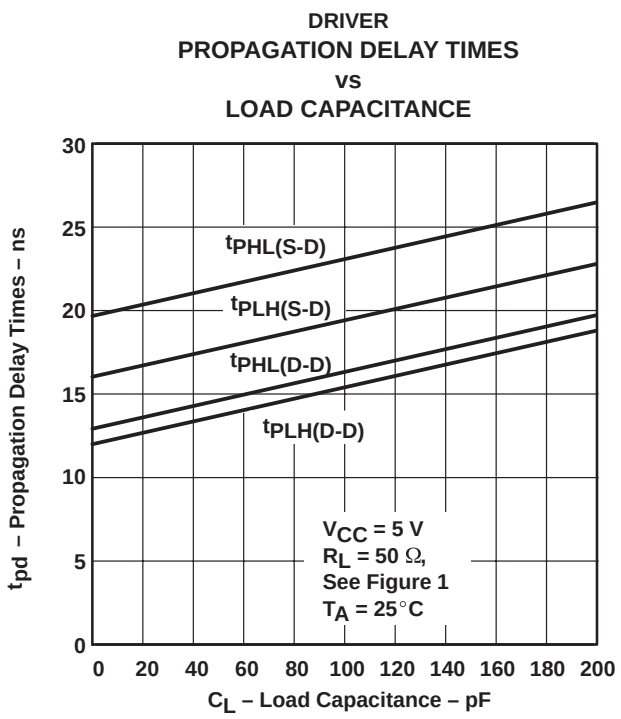


Figure 19

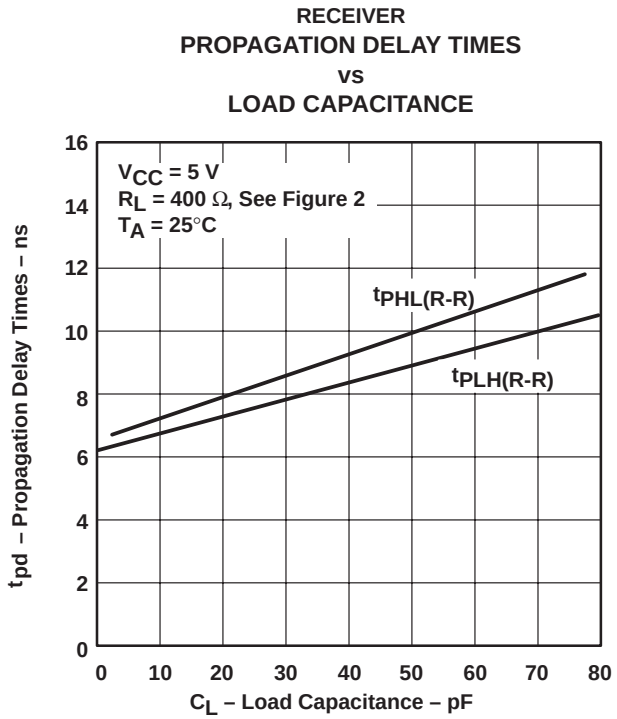


Figure 20

## APPLICATION INFORMATION

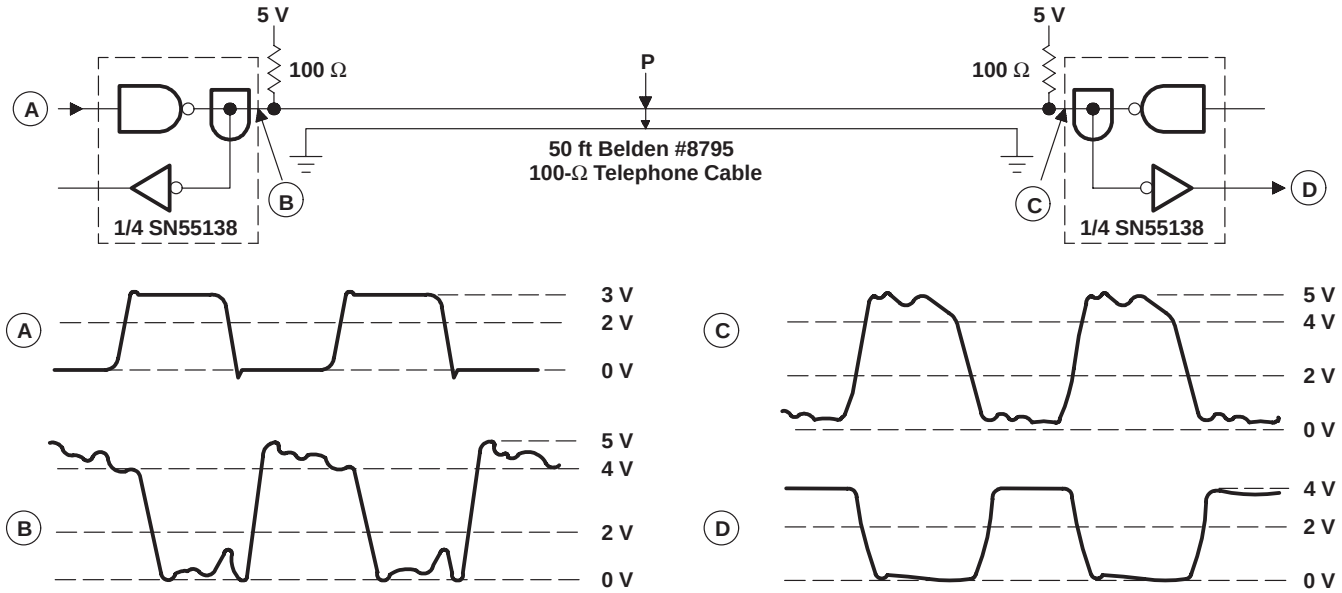


TYPICAL VOLTAGE WAVEFORMS

Figure 21. Point-to-Point Communication Over 50 Feet of Twisted Pair at 5 MHz

## APPLICATION INFORMATION

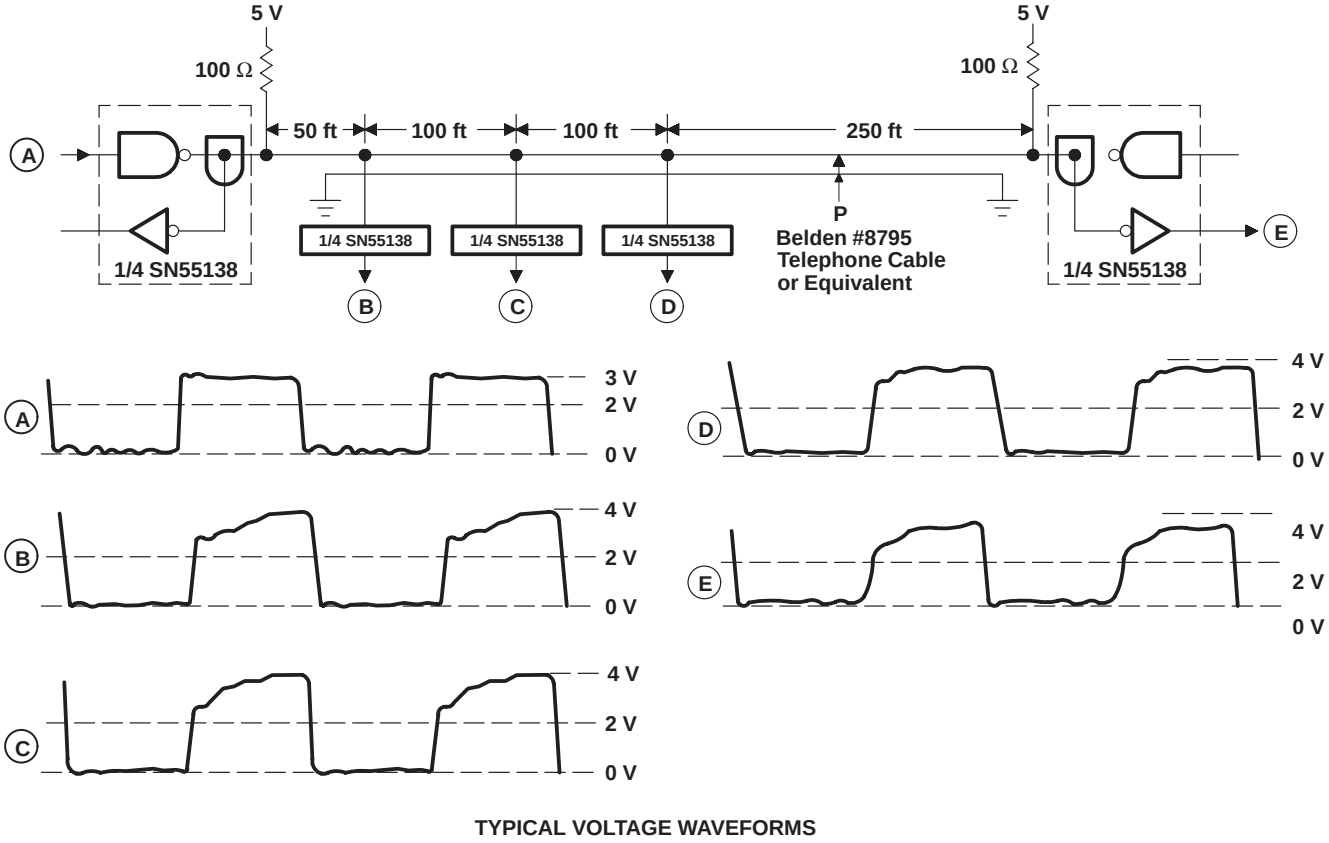


TYPICAL VOLTAGE WAVEFORMS

**Figure 22. Party-Line Communication on 500 Feet of Twisted Pair at 1 MHz**

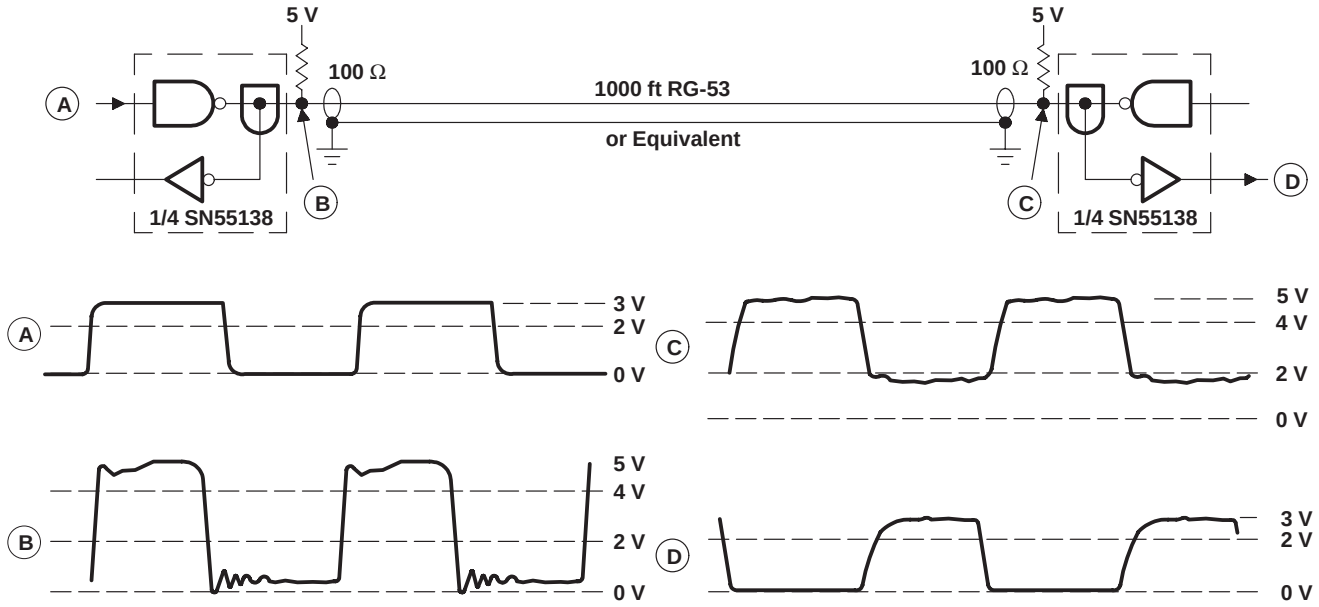


TYPICAL VOLTAGE WAVEFORMS

**Figure 23. Point-to-Point Communication Over 1000 Feet of Coaxial Cable at 1 MHz**

## PACKAGING INFORMATION

| Orderable Device | Status (1) | Package Type | Package Drawing | Pins | Package Qty | Eco Plan (2) | Lead/Ball Finish (6) | MSL Peak Temp (3) | Op Temp (°C) | Device Marking (4/5) | Samples |
|---|---|---|---|---|---|---|---|---|---|---|---|
| SN75138D | ACTIVE | SOIC | D | 16 | 40 | Green (RoHS & no Sb/Br) | NIPDAU | Level-1-260C-UNLIM | 0 to 70 | SN75138 | Samples |
| SN75138DR | ACTIVE | SOIC | D | 16 | 2500 | Green (RoHS & no Sb/Br) | NIPDAU | Level-1-260C-UNLIM | 0 to 70 | SN75138 | Samples |
| SN75138N | ACTIVE | PDIP | N | 16 | 25 | Green (RoHS & no Sb/Br) | NIPDAU | N / A for Pkg Type | 0 to 70 | SN75138N | Samples |
| SN75138NSR | ACTIVE | SO | NS | 16 | 2000 | Green (RoHS & no Sb/Br) | NIPDAU | Level-1-260C-UNLIM | 0 to 70 | SN75138 | Samples |

(1) The marketing status values are defined as follows:
**ACTIVE:** Product device recommended for new designs.
**LIFEBUY:** TI has announced that the device will be discontinued, and a lifetime-buy period is in effect.
**NRND:** Not recommended for new designs. Device is in production to support existing customers, but TI does not recommend using this part in a new design.
**PREVIEW:** Device has been announced but is not in production. Samples may or may not be available.
**OBSOLETE:** TI has discontinued the production of the device.

(2) **RoHS:** TI defines "RoHS" to mean semiconductor products that are compliant with the current EU RoHS requirements for all 10 RoHS substances, including the requirement that RoHS substance do not exceed 0.1% by weight in homogeneous materials. Where designed to be soldered at high temperatures, "RoHS" products are suitable for use in specified lead-free processes. TI may reference these types of products as "Pb-Free".
**RoHS Exempt:** TI defines "RoHS Exempt" to mean products that contain lead but are compliant with EU RoHS pursuant to a specific EU RoHS exemption.
**Green:** TI defines "Green" to mean the content of Chlorine (Cl) and Bromine (Br) based flame retardants meet JS709B low halogen requirements of <=1000ppm threshold. Antimony trioxide based flame retardants must also meet the <=1000ppm threshold requirement.

(3) MSL, Peak Temp. - The Moisture Sensitivity Level rating according to the JEDEC industry standard classifications, and peak solder temperature.

(4) There may be additional marking, which relates to the logo, the lot trace code information, or the environmental category on the device.

(5) Multiple Device Markings will be inside parentheses. Only one Device Marking contained in parentheses and separated by a "~" will appear on a device. If a line is indented then it is a continuation of the previous line and the two combined represent the entire Device Marking for that device.

(6) Lead/Ball Finish - Orderable Devices may have multiple material finish options. Finish options are separated by a vertical ruled line. Lead/Ball Finish values may wrap to two lines if the finish value exceeds the maximum column width.

**Important Information and Disclaimer:**The information provided on this page represents TI's knowledge and belief as of the date that it is provided. TI bases its knowledge and belief on information provided by third parties, and makes no representation or warranty as to the accuracy of such information. Efforts are underway to better integrate information from third parties. TI has taken and

continues to take reasonable steps to provide representative and accurate information but may not have conducted destructive testing or chemical analysis on incoming materials and chemicals.
TI and TI suppliers consider certain information to be proprietary, and thus CAS numbers and other limited information may not be available for release.

In no event shall TI's liability arising out of such information exceed the total purchase price of the TI part(s) at issue in this document sold by TI to Customer on an annual basis.

## TAPE AND REEL INFORMATION

### REEL DIMENSIONS

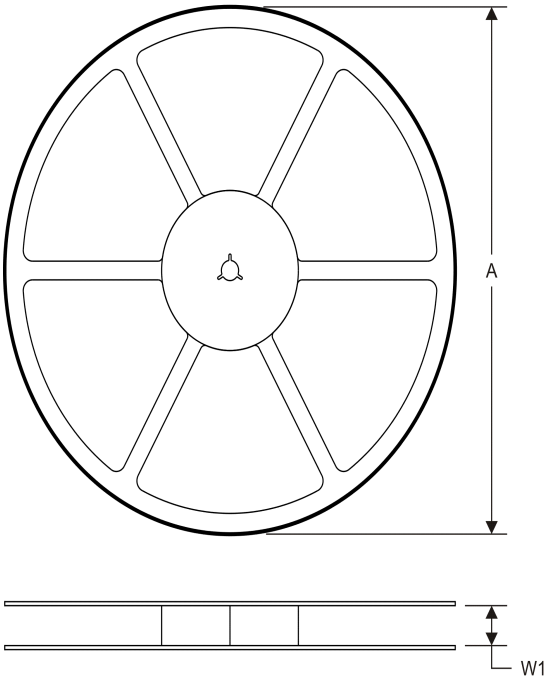


### TAPE DIMENSIONS

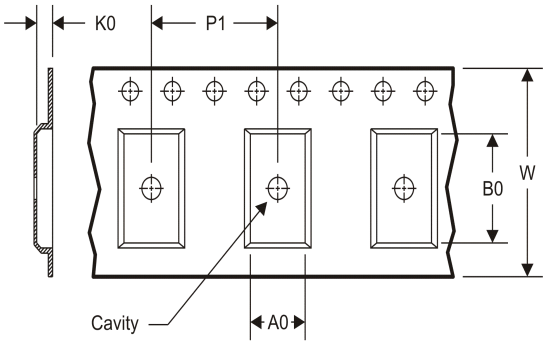


| | |
|---|---|
| A0 | Dimension designed to accommodate the component width |
| B0 | Dimension designed to accommodate the component length |
| K0 | Dimension designed to accommodate the component thickness |
| W | Overall width of the carrier tape |
| P1 | Pitch between successive cavity centers |

### TAPE AND REEL INFORMATION

*All dimensions are nominal

| Device | Package Type | Package Drawing | Pins | SPQ | Reel Diameter (mm) | Reel Width W1 (mm) | A0 (mm) | B0 (mm) | K0 (mm) | P1 (mm) | W (mm) | Pin1 Quadrant |
|---|---|---|---|---|---|---|---|---|---|---|---|---|
| SN75138DR | SOIC | D | 16 | 2500 | 330.0 | 16.4 | 6.5 | 10.3 | 2.1 | 8.0 | 16.0 | Q1 |
| SN75138NSR | SO | NS | 16 | 2000 | 330.0 | 16.4 | 8.2 | 10.5 | 2.5 | 12.0 | 16.0 | Q1 |

**TAPE AND REEL BOX DIMENSIONS**

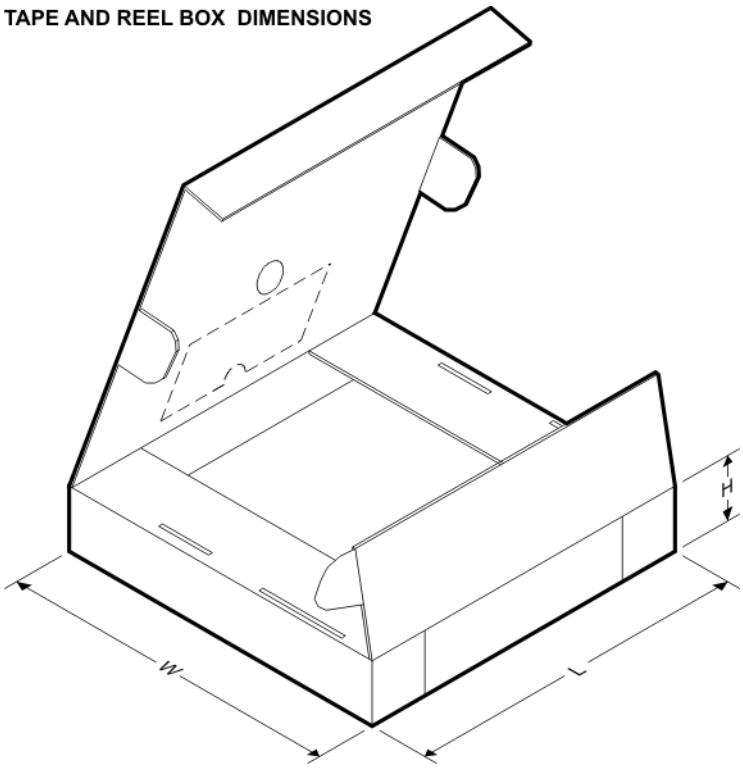


*All dimensions are nominal

| Device | Package Type | Package Drawing | Pins | SPQ | Length (mm) | Width (mm) | Height (mm) |
|---|---|---|---|---|---|---|---|
| SN75138DR | SOIC | D | 16 | 2500 | 333.2 | 345.9 | 28.6 |
| SN75138NSR | SO | NS | 16 | 2000 | 367.0 | 367.0 | 38.0 |

D (R–PDSO–G16) PLASTIC SMALL OUTLINE

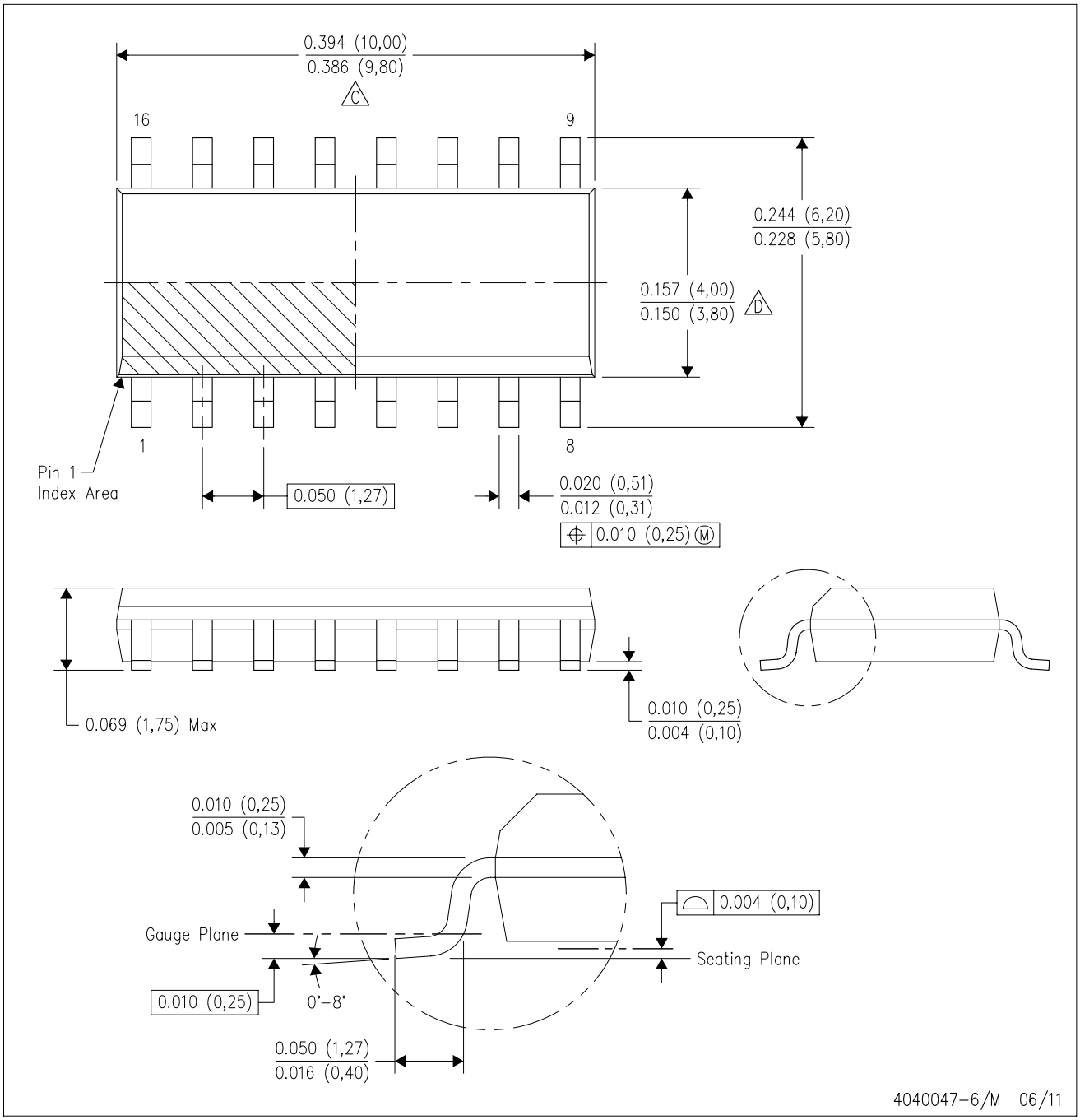


NOTES:
A. All linear dimensions are in inches (millimeters).
B. This drawing is subject to change without notice.
C. Body length does not include mold flash, protrusions, or gate burrs. Mold flash, protrusions, or gate burrs shall not exceed 0.006 (0,15) each side.
D. Body width does not include interlead flash. Interlead flash shall not exceed 0.017 (0,43) each side.
E. Reference JEDEC MS–012 variation AC.

D (R–PDSO–G16) PLASTIC SMALL OUTLINE

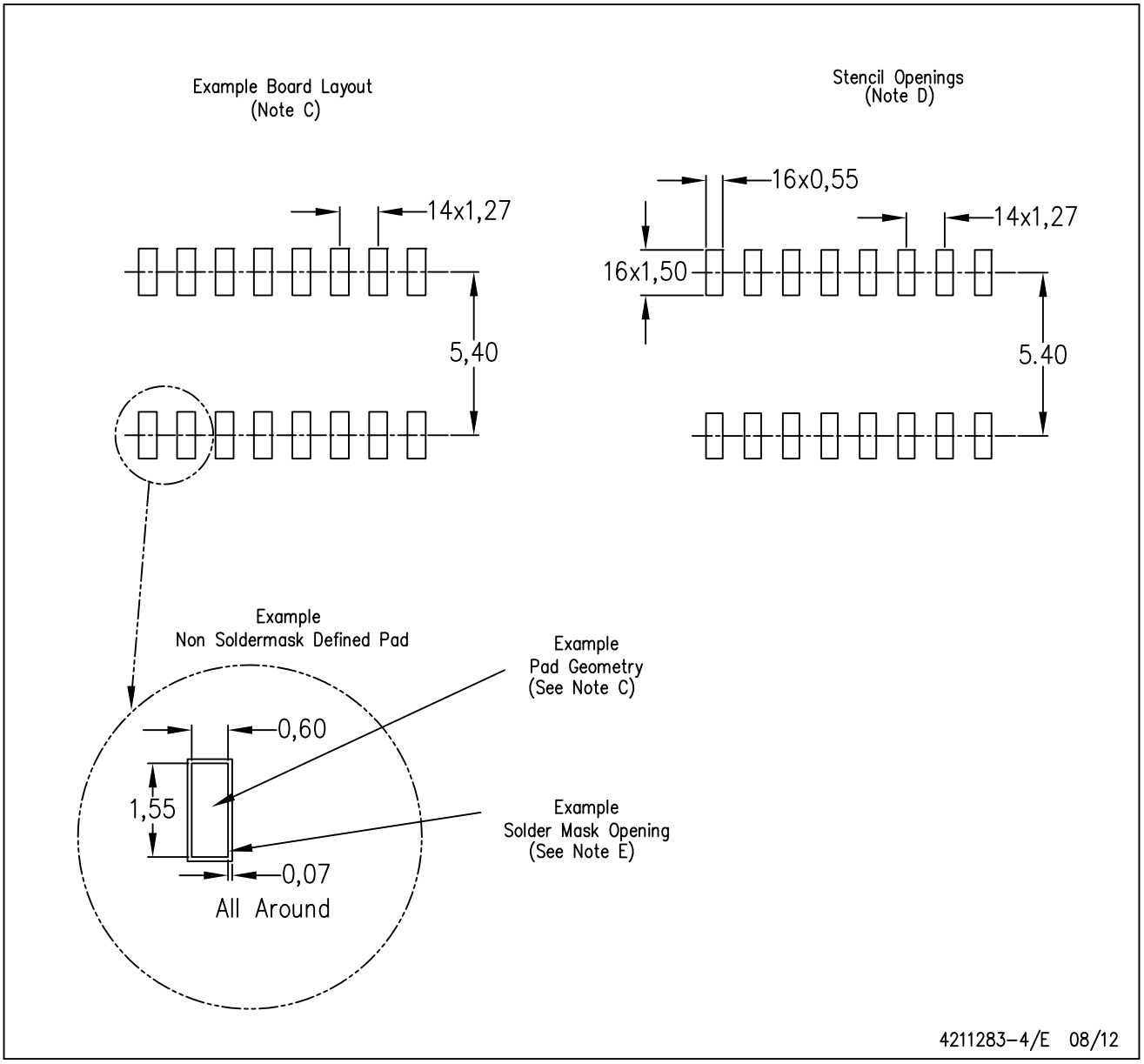


NOTES:
A. All linear dimensions are in millimeters.
B. This drawing is subject to change without notice.
C. Publication IPC–7351 is recommended for alternate designs.
D. Laser cutting apertures with trapezoidal walls and also rounding corners will offer better paste release. Customers should contact their board assembly site for stencil design recommendations. Refer to IPC–7525 for other stencil recommendations.
E. Customers should contact their board fabrication site for solder mask tolerances between and around signal pads.

## MECHANICAL DATA

**NS (R-PDSO-G**)** **PLASTIC SMALL-OUTLINE PACKAGE**

**14-PINS SHOWN**

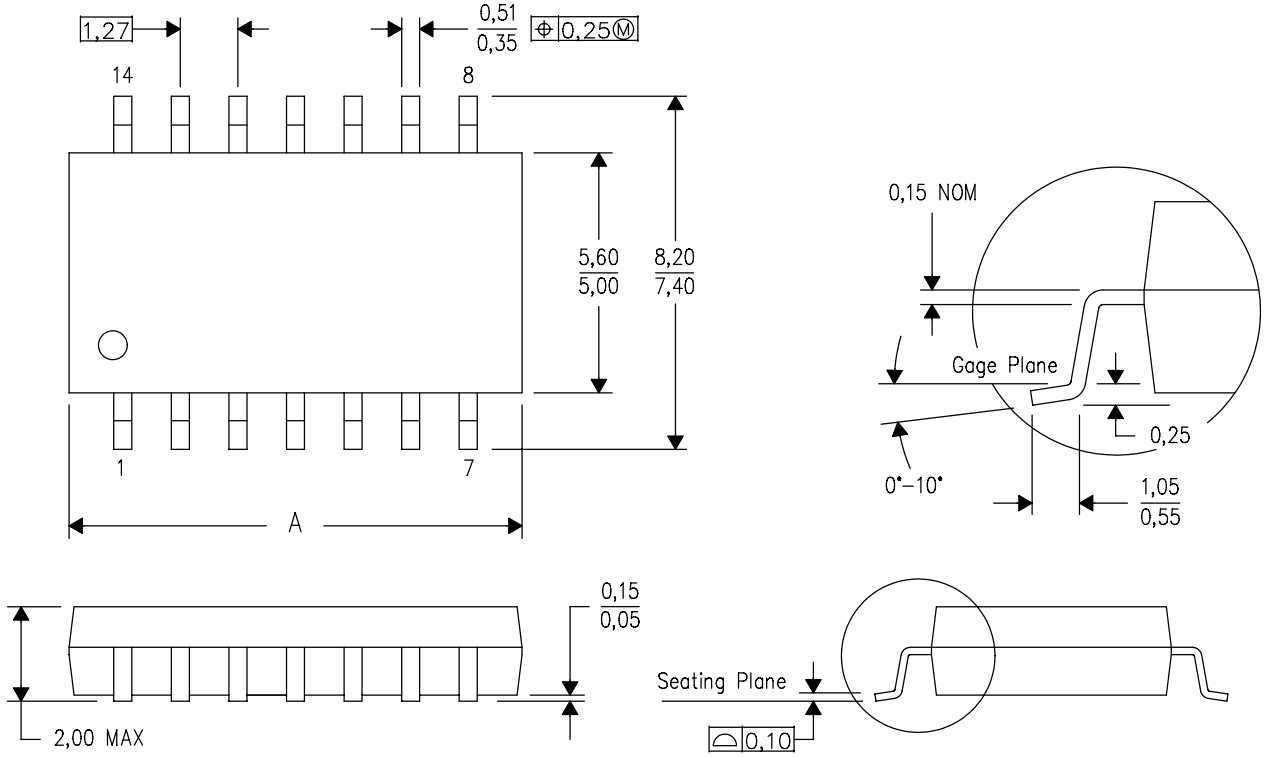


| DIM \ PINS ** | 14 | 16 | 20 | 24 |
|---|---|---|---|---|
| A MAX | 10,50 | 10,50 | 12,90 | 15,30 |
| A MIN | 9,90 | 9,90 | 12,30 | 14,70 |

4040062/C 03/03

NOTES:
A. All linear dimensions are in millimeters.
B. This drawing is subject to change without notice.
C. Body dimensions do not include mold flash or protrusion, not to exceed 0,15.

## N (R–PDIP–T**) PLASTIC DUAL–IN–LINE PACKAGE

16 PINS SHOWN

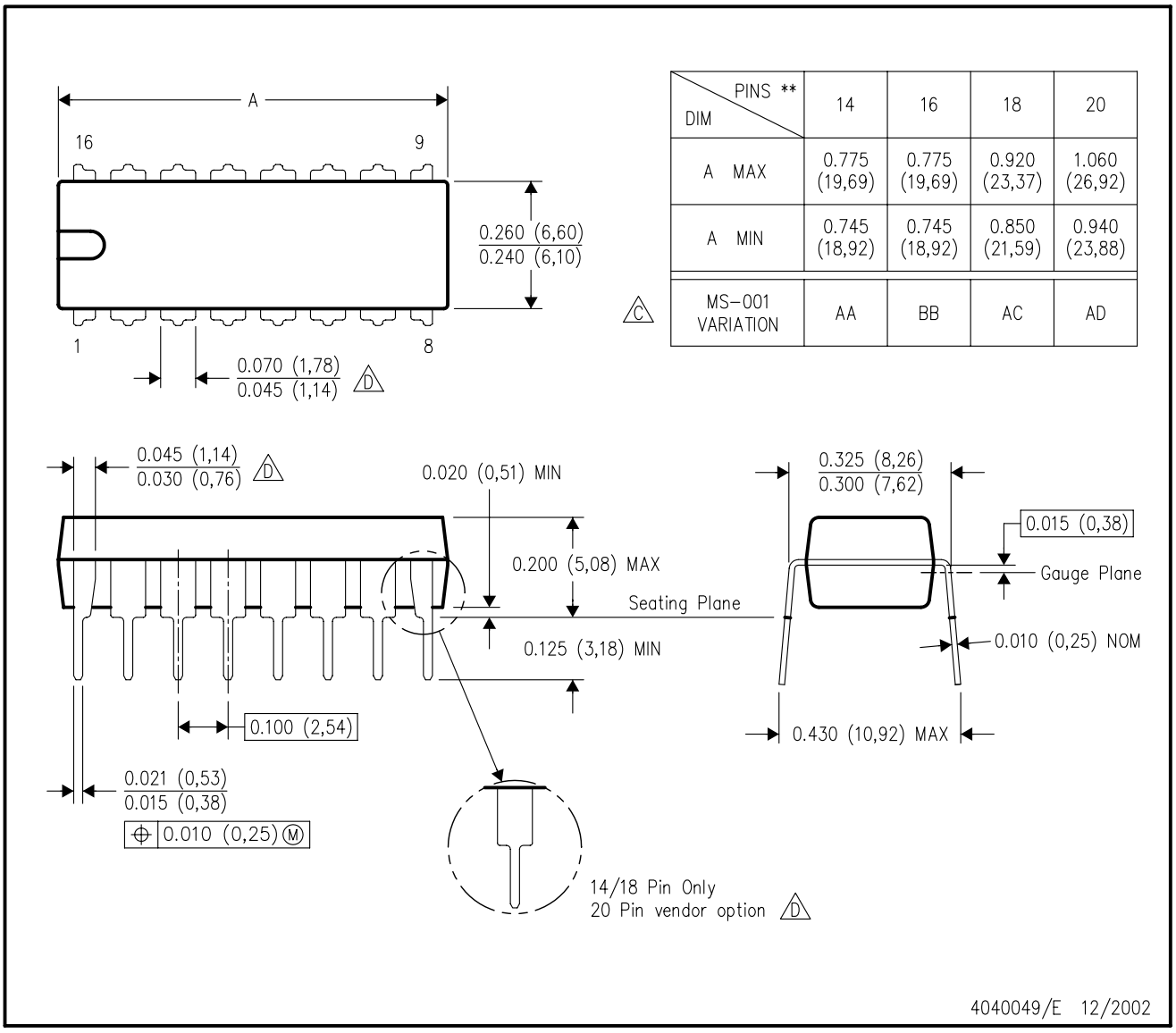


| DIM \ PINS ** | 14 | 16 | 18 | 20 |
|---|---|---|---|---|
| A MAX | 0.775 (19,69) | 0.775 (19,69) | 0.920 (23,37) | 1.060 (26,92) |
| A MIN | 0.745 (18,92) | 0.745 (18,92) | 0.850 (21,59) | 0.940 (23,88) |
| MS–001 VARIATION (C) | AA | BB | AC | AD |

NOTES:
A. All linear dimensions are in inches (millimeters).
B. This drawing is subject to change without notice.
C. Falls within JEDEC MS–001, except 18 and 20 pin minimum body length (Dim A).
D. The 20 pin end lead shoulder width is a vendor option, either half or full width.

## IMPORTANT NOTICE AND DISCLAIMER

TI PROVIDES TECHNICAL AND RELIABILITY DATA (INCLUDING DATASHEETS), DESIGN RESOURCES (INCLUDING REFERENCE DESIGNS), APPLICATION OR OTHER DESIGN ADVICE, WEB TOOLS, SAFETY INFORMATION, AND OTHER RESOURCES “AS IS” AND WITH ALL FAULTS, AND DISCLAIMS ALL WARRANTIES, EXPRESS AND IMPLIED, INCLUDING WITHOUT LIMITATION ANY IMPLIED WARRANTIES OF MERCHANTABILITY, FITNESS FOR A PARTICULAR PURPOSE OR NON-INFRINGEMENT OF THIRD PARTY INTELLECTUAL PROPERTY RIGHTS.

These resources are intended for skilled developers designing with TI products. You are solely responsible for (1) selecting the appropriate TI products for your application, (2) designing, validating and testing your application, and (3) ensuring your application meets applicable standards, and any other safety, security, or other requirements. These resources are subject to change without notice. TI grants you permission to use these resources only for development of an application that uses the TI products described in the resource. Other reproduction and display of these resources is prohibited. No license is granted to any other TI intellectual property right or to any third party intellectual property right. TI disclaims responsibility for, and you will fully indemnify TI and its representatives against, any claims, damages, costs, losses, and liabilities arising out of your use of these resources.

TI’s products are provided subject to TI’s Terms of Sale (www.ti.com/legal/termsofsale.html) or other applicable terms available either on ti.com or provided in conjunction with such TI products. TI’s provision of these resources does not expand or otherwise alter TI’s applicable warranties or warranty disclaimers for TI products.

Mailing Address: Texas Instruments, Post Office Box 655303, Dallas, Texas 75265
Copyright © 2020, Texas Instruments Incorporated