- Parallel Access
- Typical Propagation Delay Time . . . 20 ns
- Typical Power Dissipation . . . 120 mW
- Applications:
  - N-Bit Storage Files
  - Hex/BCD Serial-To-Parallel Converters

description

These octal registers are organized as two 4-bit bytes of storage. Upon application of a positive-going clock signal, the information stored in byte 1 is transferred into byte 2 as a new 4-bit byte is loaded into the byte 1 location via the four data lines. The full 8-bit word is available at the outputs after two clock cycles. Both the clock and the strobe lines are fully buffered.

SN54LS396 . . . J OR W PACKAGE
SN74LS396 . . . D OR N PACKAGE
(TOP VIEW)

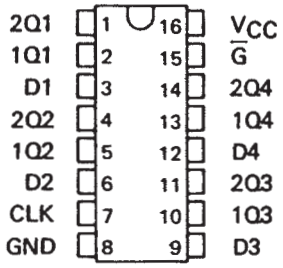

SN54LS396 . . . FK PACKAGE
(TOP VIEW)

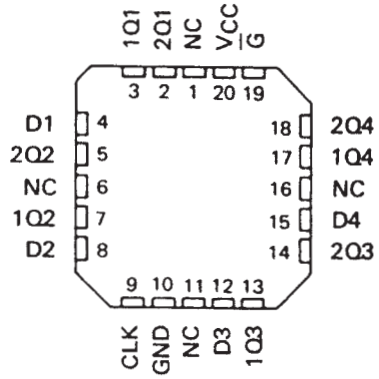

NC - No internal connection

logic symbol†

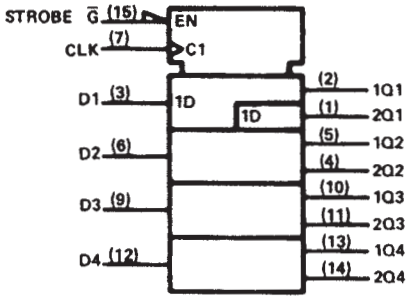

†This symbol is in accordance with ANSI/IEEE Std. 91-1984 and IEC Publication 617-12.
Pin numbers shown are for D, J, N, and W packages.

FUNCTION TABLE

INPUTS						OUTPUTS							
STROBE $\overline{G}$	CLOCK	DATA				BYTE 1				BYTE 2			
		D1	D2	D3	D4	1Q1	1Q2	1Q3	1Q4	2Q1	2Q2	2Q3	2Q4
H	X	X	X	X	X	L	L	L	L	L	L	L	L
L	↑	a	b	c	d	a	b	c	d	$1Q1_n$	$1Q2_n$	$1Q3_n$	$1Q4_n$

H = high level (steady state), L = low level (steady state), X = irrelevant (any input, including transitions)
↑ = transition from low to high level
$1Q1_n$, $1Q2_n$, $1Q3_n$, $1Q4_n$ = the level of 1Q1, 1Q2, 1Q3, and 1Q4, respectively, before the most recent ↑ transition of the clock.

PRODUCTION DATA information is current as of publication date. Products conform to specifications per the terms of Texas Instruments standard warranty. Production processing does not necessarily include testing of all parameters.

Copyright © 1988, Texas Instruments Incorporated

logic diagram (positive logic)

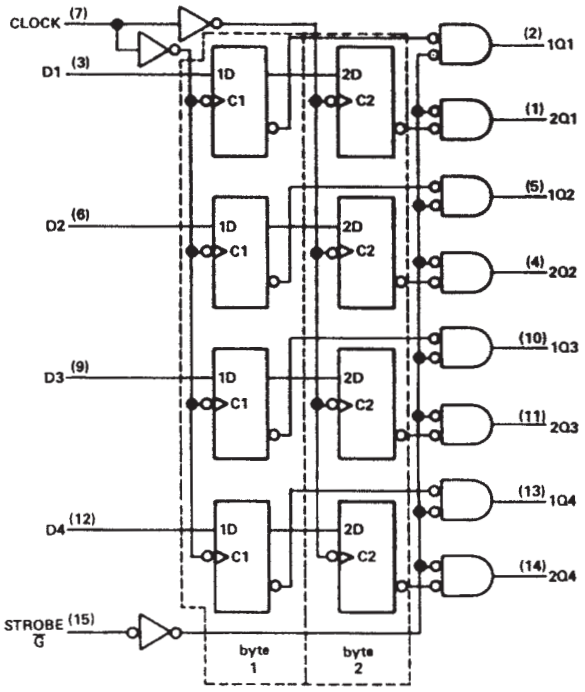

schematics of inputs and outputs

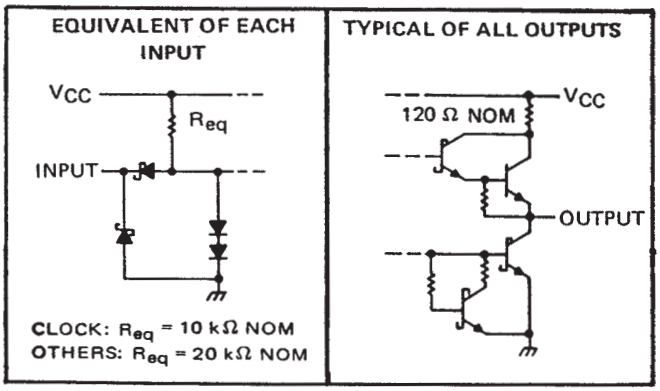

Pin numbers shown are for D, J, N, and W packages.

absolute maximum ratings over operating free-air temperature range (unless otherwise noted)

Supply voltage, V_{CC} (see Note 1) . . . . . 7 V
Input voltage . . . . . 7 V
Operating free-air temperature range: SN54LS396 . . . . . −55°C to 125°C
SN74LS396 . . . . . 0°C to 70°C
Storage temperature range . . . . . −65°C to 150°C

NOTE 1: Voltage values are with respect to network ground terminal.

recommended operating conditions

	SN54LS396			SN74LS396			UNIT
	MIN	NOM	MAX	MIN	NOM	MAX	
Supply voltage, V_{CC}	4.5	5	5.5	4.75	5	5.25	V
High-level output current, I_{OH}			−400			−400	μA
Low-level output current, I_{OL}			4			8	mA
Clock frequency, f_{clock}	0		30	0		30	MHz
Width of clock pulse, t_w	20			20			ns
Setup time, t_{su}	20			20			ns
Hold time, t_h	5			5			ns
Operating free-air temperature, T_A	−55		125	0		70	°C

electrical characteristics over recommended operating free-air temperature range (unless otherwise noted)

PARAMETER			TEST CONDITIONS†		SN54LS396			SN74LS396			UNIT
					MIN	TYP‡	MAX	MIN	TYP‡	MAX	
V_{IH}	High-level input voltage				2			2			V
V_{IL}	Low-level input voltage						0.7			0.8	V
V_{IK}	Input clamp voltage		V_{CC} = MIN,	I_I = −18 mA			−1.5			−1.5	V
V_{OH}	High-level output voltage		V_{CC} = MIN, V_{IL} = MAX,	V_{IH} = 2 V, I_{OH} = −400 μA	2.5	3.4		2.7	3.4		V
V_{OL}	Low-level output voltage		V_{CC} = MIN, V_{IH} = 2 V, V_{IL} = MAX	I_{OL} = 4 mA		0.25	0.4		0.25	0.4	V
				I_{OL} = 8 mA					0.35	0.5	
I_I	Input current at maximum input voltage	Clock input	V_{CC} = MAX,	V_I = 7 V			0.2			0.2	mA
		Other inputs					0.1			0.1	
I_{IH}	High-level input current	Clock input	V_{CC} = MAX,	V_I = 2.7 V			40			40	μA
		Other inputs					20			20	
I_{IL}	Low-level input current	Clock input	V_{CC} = MAX,	V_I = 0.4 V			−0.8			−0.8	mA
		Other inputs					−0.4			−0.4	
I_{OS}	Short-circuit output current§		V_{CC} = MAX		−20		−100	−20		−100	mA
I_{CC}	Supply current		V_{CC} = MAX,	See Note 2		24	40		24	40	mA

†For conditions shown as MIN or MAX, use the appropriate value specified under recommended operating conditions.
‡All typical values are at V_{CC} = 5 V, T_A = 25°C.
§Not more than one output should be shorted at a time and duration of the short-circuit should not exceed one second.
NOTE 2: I_{CC} is measured with 4.5 V applied to all inputs and all outputs open.

switching characteristics, V_{CC} = 5 V, T_A = 25°C

PARAMETER		TEST CONDITIONS	MIN	TYP	MAX	UNIT
t_{PLH}	Propagation delay time, low-to-high-level output from clock	C_L = 15 pF, R_L = 2 kΩ, See Note 3		20	30	ns
t_{PHL}	Propagation delay time, high-to-low-level output from clock			20	30	
t_{PLH}	Propagation delay time, low-to-high-level output from strobe			20	30	ns
t_{PHL}	Propagation delay time, high-to-low-level output from strobe			20	30	

NOTE 3: Load circuits and voltage waveforms are shown in Section 1.

IMPORTANT NOTICE

Texas Instruments and its subsidiaries (TI) reserve the right to make changes to their products or to discontinue any product or service without notice, and advise customers to obtain the latest version of relevant information to verify, before placing orders, that information being relied on is current and complete. All products are sold subject to the terms and conditions of sale supplied at the time of order acknowledgement, including those pertaining to warranty, patent infringement, and limitation of liability.

TI warrants performance of its semiconductor products to the specifications applicable at the time of sale in accordance with TI's standard warranty. Testing and other quality control techniques are utilized to the extent TI deems necessary to support this warranty. Specific testing of all parameters of each device is not necessarily performed, except those mandated by government requirements.

CERTAIN APPLICATIONS USING SEMICONDUCTOR PRODUCTS MAY INVOLVE POTENTIAL RISKS OF DEATH, PERSONAL INJURY, OR SEVERE PROPERTY OR ENVIRONMENTAL DAMAGE ("CRITICAL APPLICATIONS"). TI SEMICONDUCTOR PRODUCTS ARE NOT DESIGNED, AUTHORIZED, OR WARRANTED TO BE SUITABLE FOR USE IN LIFE-SUPPORT DEVICES OR SYSTEMS OR OTHER CRITICAL APPLICATIONS. INCLUSION OF TI PRODUCTS IN SUCH APPLICATIONS IS UNDERSTOOD TO BE FULLY AT THE CUSTOMER'S RISK.

In order to minimize risks associated with the customer's applications, adequate design and operating safeguards must be provided by the customer to minimize inherent or procedural hazards.

TI assumes no liability for applications assistance or customer product design. TI does not warrant or represent that any license, either express or implied, is granted under any patent right, copyright, mask work right, or other intellectual property right of TI covering or relating to any combination, machine, or process in which such semiconductor products or services might be or are used. TI's publication of information regarding any third party's products or services does not constitute TI's approval, warranty or endorsement thereof.

Copyright © 1999, Texas Instruments Incorporated