SN54192, SN54193, SN54LS192, SN54LS193, SN74192, SN74193, SN74LS192, SN74LS193
SYNCHRONOUS 4-BIT UP/DOWN COUNTERS (DUAL CLOCK WITH CLEAR)

SDLS074 – DECEMBER 1972 – REVISED MARCH 1988

- **Cascading Circuitry Provided Internally**
- **Synchronous Operation**
- **Individual Preset to Each Flip-Flop**
- **Fully Independent Clear Input**

TYPES	TYPICAL MAXIMUM COUNT FREQUENCY	TYPICAL POWER DISSIPATION
'192,'193	32 MHz	325 mW
'LS192,'LS193	32 MHz	95 mW

SN54192, SN54193, SN54LS192, SN54LS193 . . . J OR W PACKAGE
SN74192, SN74193 . . . N PACKAGE
SN74LS192, SN74LS193 . . . D OR N PACKAGE
(TOP VIEW)

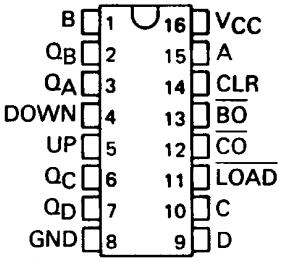

SN54LS192, SN54LS193 . . . FK PACKAGE
(TOP VIEW)

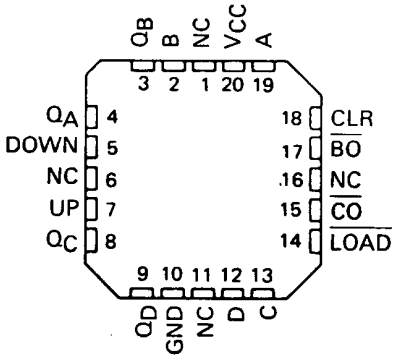

NC - No internal connection

description

These monolithic circuits are synchronous reversible (up/down) counters having a complexity of 55 equivalent gates. The '192 and 'LS192 circuits are BCD counters and the '193 and 'LS193 are 4-bit binary counters. Synchronous operation is provided by having all flip-flops clocked simultaneously so that the outputs change coincidently with each other when so instructed by the steering logic. This mode of operation eliminates the output counting spikes which are normally associated with asynchronous (ripple-clock) counters.

The outputs of the four master-slave flip-flops are triggered by a low-to-high-level transition of either count (clock) input. The direction of counting is determined by which count input is pulsed while the other count input is high.

All four counters are fully programmable; that is, each output may be preset to either level by entering the desired data at the data inputs while the load input is low. The output will change to agree with the data inputs independently of the count pulses. This feature allows the counters to be used as modulo-N dividers by simply modifying the count length with the preset inputs.

A clear input has been provided which forces all outputs to the low level when a high level is applied. The clear function is independent of the count and load inputs. The clear, count, and load inputs are buffered to lower the drive requirements. This reduces the number of clock drivers, etc., required for long words.

These counters were designed to be cascaded without the need for external circuitry. Both borrow and carry outputs are available to cascade both the up- and down-counting functions. The borrow output produces a pulse equal in width to the count-down input when the counter underflows. Similarly, the carry output produces a pulse equal in width to the count-up input when an overflow condition exists. The counters can then be easily cascaded by feeding the borrow and carry outputs to the count-down and count-up inputs respectively of the succeeding counter.

absolute maximum ratings over operating free-air temperature range (unless otherwise noted)

	SN54'	SN54LS'	SN74'	SN74LS'	UNIT
Supply voltage, V_{CC} (see Note 1)	7	7	7	7	V
Input voltage	5.5	7	5.5	7	V
Operating free-air temperature range	−55 to 125		0 to 70		°C
Storage temperature range	−65 to 150		−65 to 150		°C

NOTE 1: Voltage values are with respect to network ground terminal.

PRODUCTION DATA information is current as of publication date. Products conform to specifications per the terms of Texas Instruments standard warranty. Production processing does not necessarily include testing of all parameters.

Copyright © 1988, Texas Instruments Incorporated

logic diagram (positive logic)

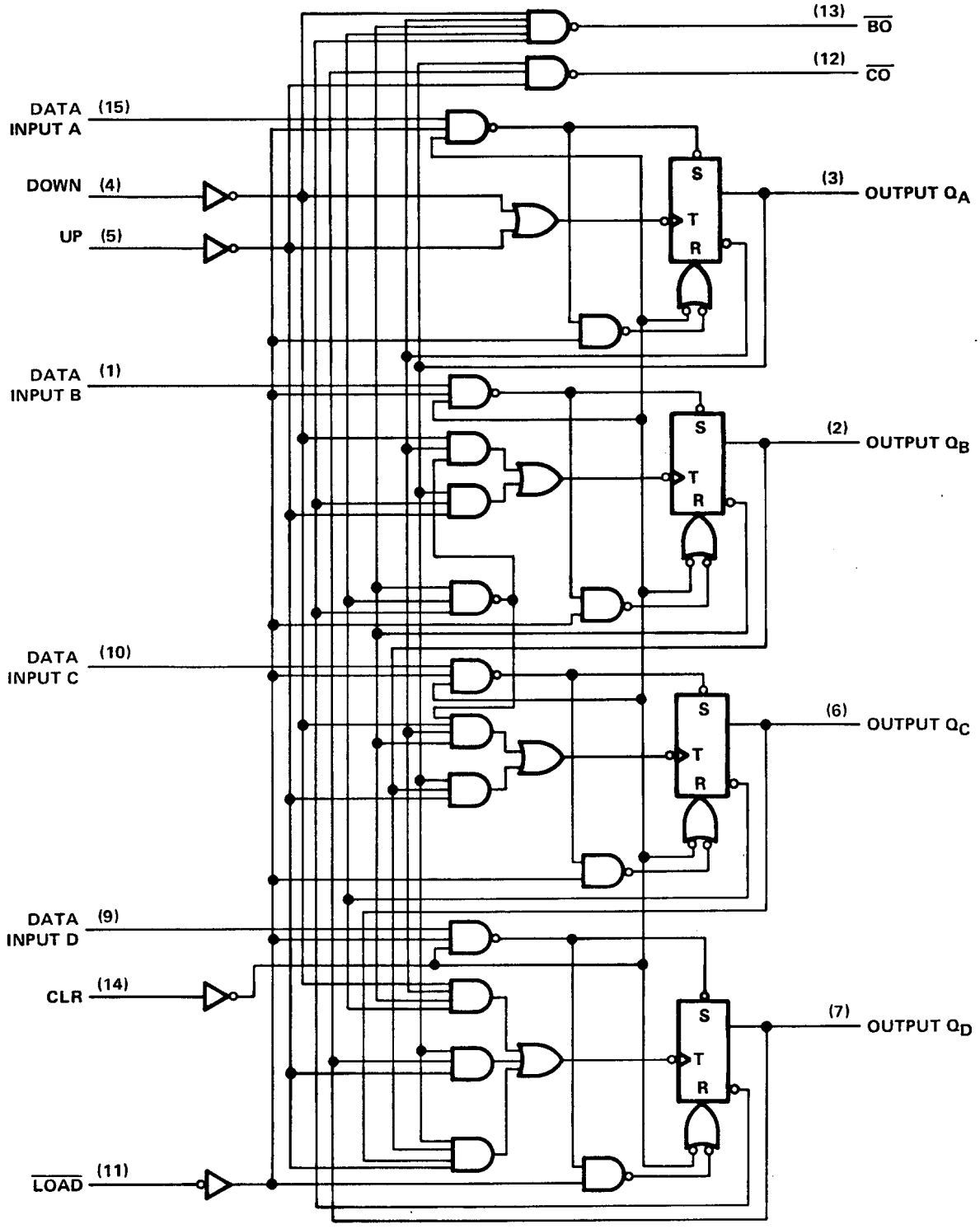

Pin numbers shown are for D, J, N, and W packages.

logic diagram (positive logic)

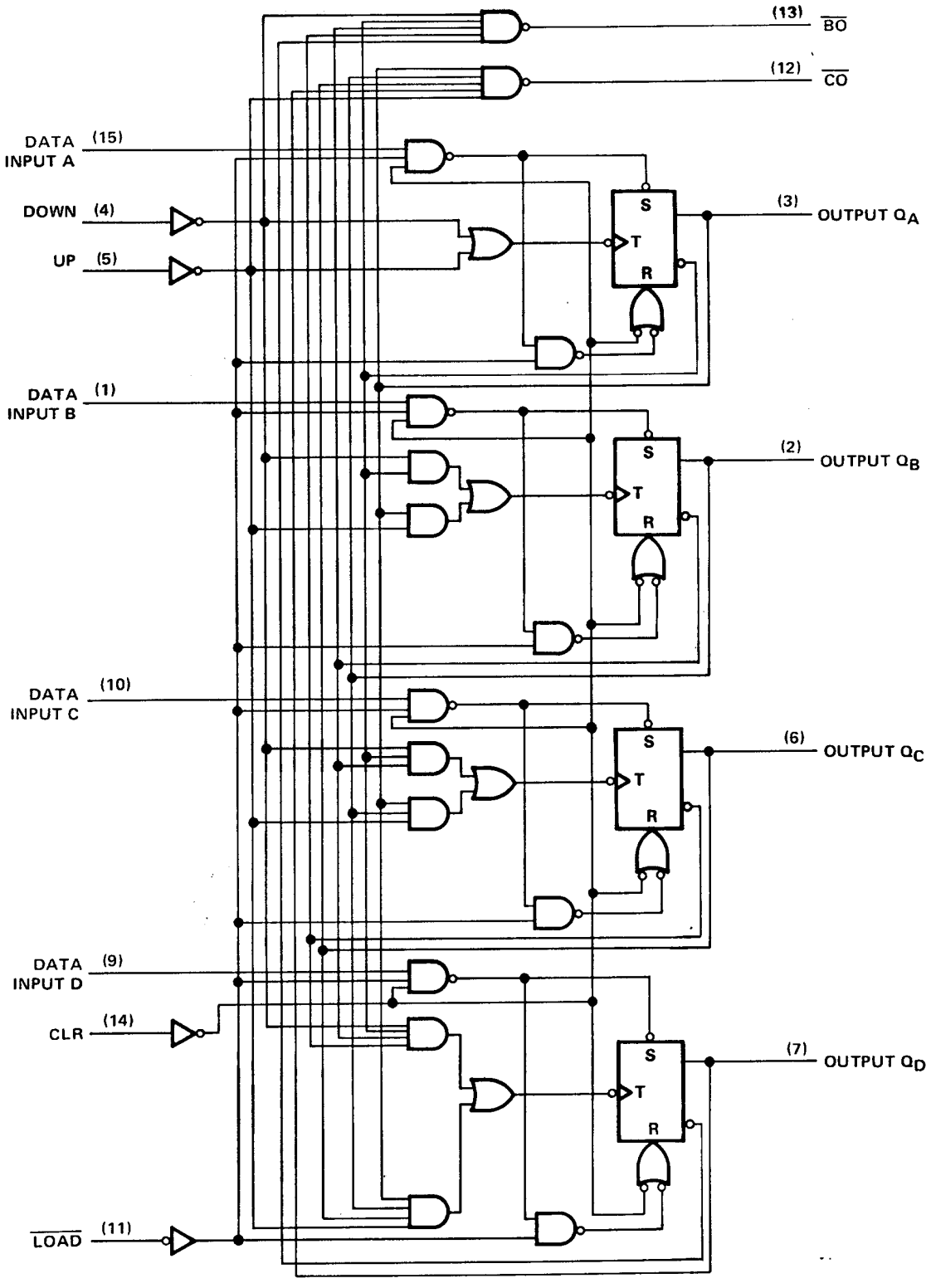

Pin numbers shown are for D, J, N, and W packages.

logic symbols†

'192

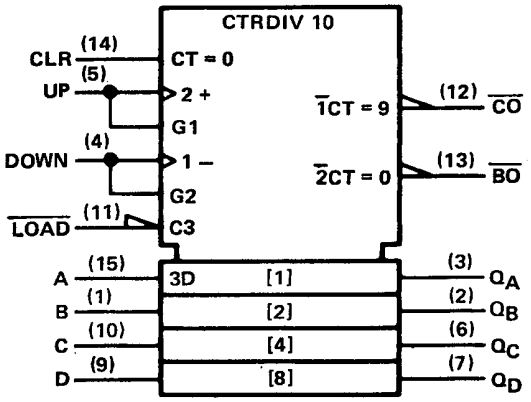

'193

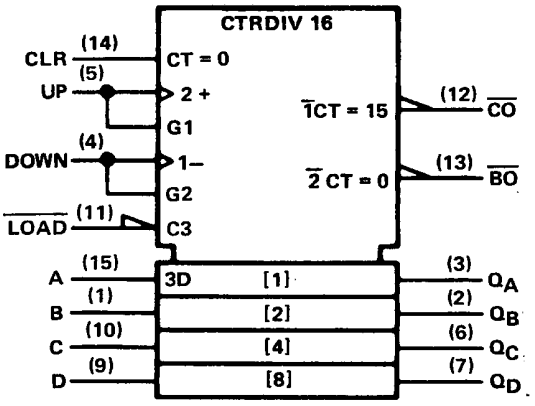

†These symbols are in accordance with ANSI/IEEE Std. 91-1984 and IEC Publication 617-12.
Pin numbers shown are for D, J, N, and W packages.

schematics of inputs and outputs

EQUIVALENT OF INPUTS
OF '192, '193

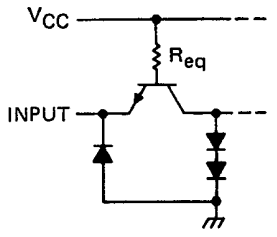

'192, '193: R_{eq} = 4 kΩ NOM

TYPICAL OF OUTPUTS
OF '192, '193

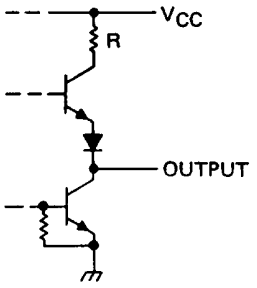

'192, '193: R = 130 Ω NOM

EQUIVALENT OF INPUTS
OF 'LS192, 'LS193

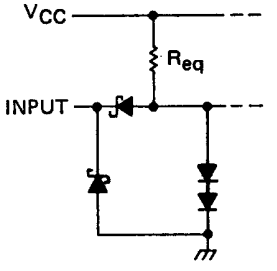

Load input: R_{eq} = 25 kΩ NOM
All other inputs: R_{eq} = 17 kΩ NOM

TYPICAL OF OUTPUTS
OF 'LS192, 'LS193

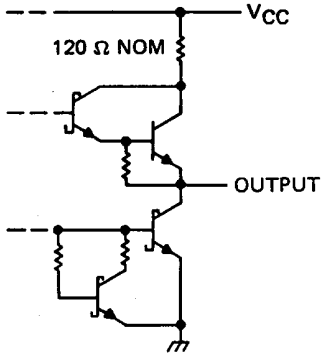

'192, 'LS192 DECADE COUNTERS

typical clear, load, and count sequences

Illustrated below is the following sequence:

1. Clear outputs to zero.
2. Load (preset) to BCD seven.
3. Count up to eight, nine, carry, zero, one, and two.
4. Count down to one, zero, borrow, nine, eight, and seven.

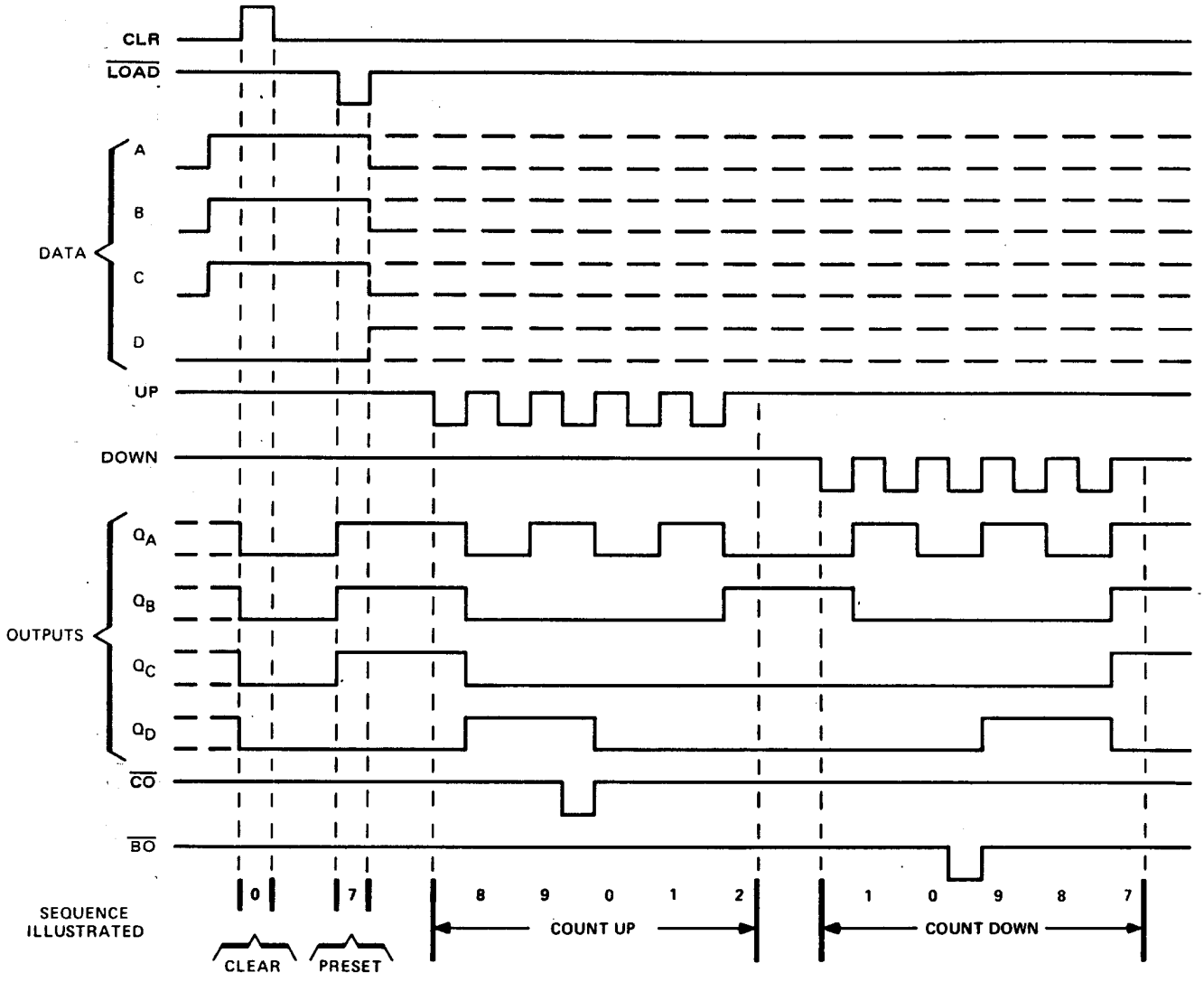

NOTES: A. Clear overrides load, data, and count inputs.
B. When counting up, count-down input must be high; when counting down, count-up input must be high.

'193, 'LS193 BINARY COUNTERS

typical clear, load, and count sequences

Illustrated below is the following sequence:

1. Clear outputs to zero.
2. Load (preset) to binary thirteen.
3. Count up to fourteen, fifteen, carry, zero, one, and two.
4. Count down to one, zero, borrow, fifteen, fourteen, and thirteen.

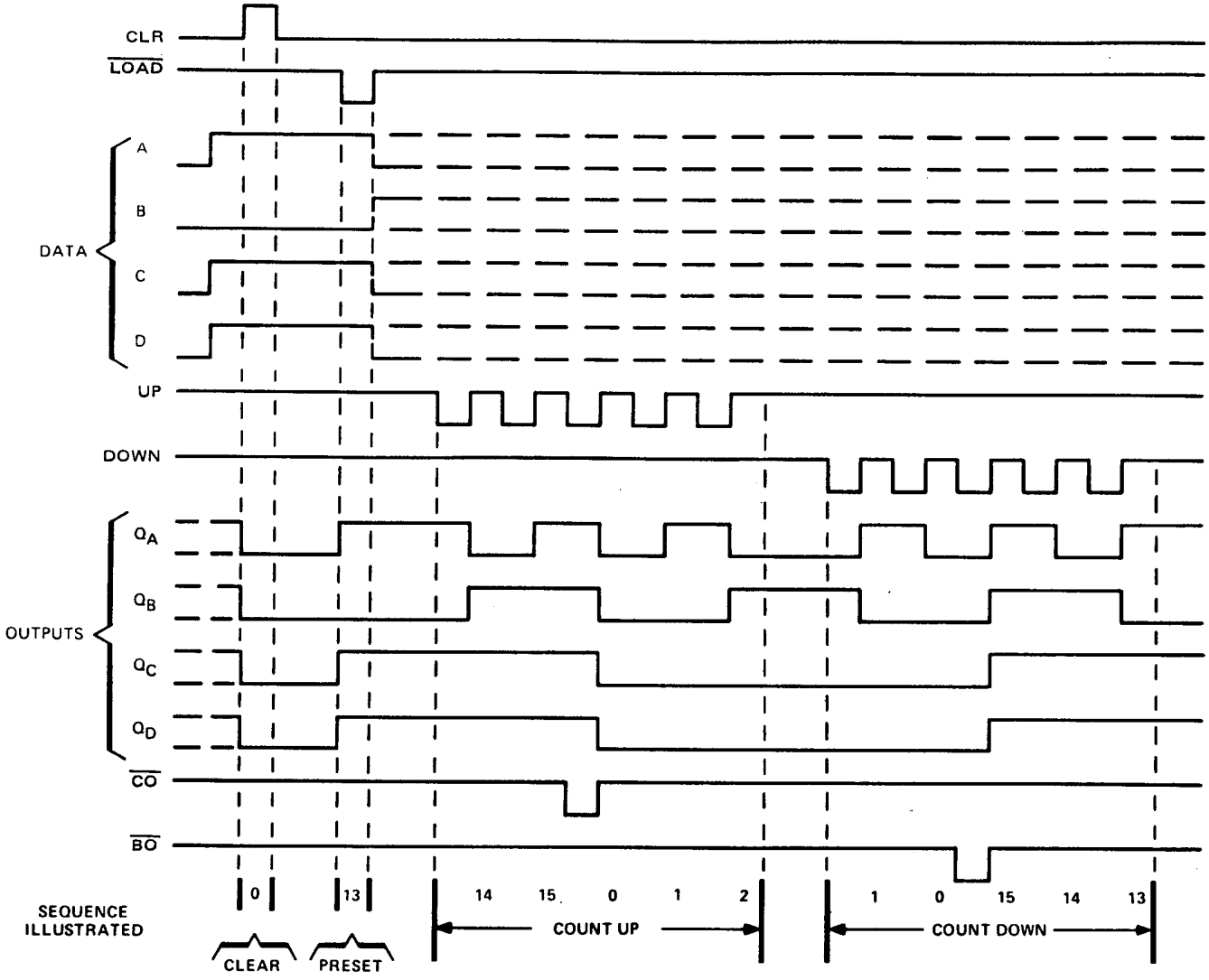

NOTES: A. Clear overrides load, data, and count inputs.

B. When counting up, count-down input must be high; when counting down, count-up input must be high.

recommended operating conditions

			SN54192 SN54193			SN74192 SN74193			UNIT
			MIN	NOM	MAX	MIN	NOM	MAX	
V_{CC}	Supply voltage		4.5	5	5.5	4.75	5	5.25	V
I_{OH}	High-level output current				−0.4			−0.4	mA
I_{OL}	Low-level output current				16			16	mA
f_{clock}	Clock frequency		0		25	0		25	MHz
t_w	Width of any input pulse		20			20			ns
t_{su}	Data setup time, (see Figure 1)		20			20			ns
t_h	Hold time	Data, high or low	0			0			ns
		$\overline{LOAD}$	3			3			
T_A	Operating free-air temperature		−55		125	0		70	°C

electrical characteristics over recommended operating free-air temperature range (unless otherwise noted)

PARAMETER		TEST CONDITIONS†	SN54192 SN54193			SN74192 SN74193			UNIT
			MIN	TYP‡	MAX	MIN	TYP‡	MAX	
V_{IH}	High-level input voltage		2			2			V
V_{IL}	Low-level input voltage				0.8			0.8	V
V_{IK}	Input clamp voltage	V_{CC} = MIN, I_I = −12 mA			−1.5			−1.5	V
V_{OH}	High-level output voltage	V_{CC} = MIN, V_{IH} = 2 V, V_{IL} = 0.8 V, I_{OH} = −0.4 mA	2.4	3.4		2.4	3.4		V
V_{OL}	Low-level output voltage	V_{CC} = MIN, V_{IH} = 2 V, V_{IL} = 0.8 V, I_{OL} = 16 mA		0.2	0.4		0.2	0.4	V
I_I	Input current at maximum input voltage	V_{CC} = MAX, V_I = 5.5 V			1			1	mA
I_{IH}	High-level input current	V_{CC} = MAX, V_I = 2.4 V			40			40	μA
I_{IL}	Low-level input current	V_{CC} = MAX, V_I = 0.4 V			−1.6			−1.6	mA
I_{OS}	Short-circuit output current§	V_{CC} = MAX	−20		−65	−18		−65	mA
I_{CC}	Supply current	V_{CC} = MAX, See Note 2		65	89		65	102	mA

†For conditions shown as MIN or MAX, use the appropriate value specified under recommended operating conditions for the applicable type.
‡All typical values are at V_{CC} = 5 V, T_A = 25°C.
§Not more than one output should be shorted at a time.
NOTE 2: I_{CC} is measured with all outputs open, clear and load inputs grounded, and all other inputs at 4.5 V.

switching characteristics, V_{CC} = 5 V, T_A = 25°C

PARAMETER¶	FROM INPUT	TO OUTPUT	TEST CONDITIONS	MIN	TYP	MAX	UNIT
f_{max}			C_L = 15 pF, R_L = 400 Ω, See Figures 1 and 2	25	32		MHz
t_{PLH}	UP	$\overline{CO}$			17	26	ns
t_{PHL}					16	24	
t_{PLH}	DOWN	$\overline{BO}$			16	24	ns
t_{PHL}					16	24	
t_{PLH}	UP OR DOWN	Q			25	38	ns
t_{PHL}					31	47	
t_{PLH}	$\overline{LOAD}$	Q			27	40	ns
t_{PHL}					29	40	
t_{PHL}	CLR	Q			22	35	ns

¶f_{max} ≡ maximum clock frequency
t_{PLH} ≡ propagation delay time, low-to-high-level output
t_{PHL} ≡ propagation delay time, high-to-low-level output

recommended operating conditions

		SN54LS192 SN54LS193			SN74LS192 SN74LS193			UNIT
		MIN	NOM	MAX	MIN	NOM	MAX	
V_{CC}	Supply voltage	4.5	5	5.5	4.75	5	5.25	V
I_{OH}	High-level output current			−400			−400	μA
I_{OL}	Low-level output current			4			8	mA
f_{clock}	Clock frequency	0		25	0		25	MHz
t_w	Width of any input pulse	20			20			ns
t_{su}	Clear inactive-state setup time	15			15			ns
	Load inactive-state setup time	15			15			ns
	Data setup time (see Figure 1)	20			20			ns
t_h	Data hold time	5			5			ns
T_A	Operating free-air temperature range	−55		125	0		70	°C

electrical characteristics over recommended operating free-air temperature range (unless otherwise noted)

PARAMETER		TEST CONDITIONS†		SN54LS192 SN54LS193			SN74LS192 SN74LS193			UNIT
				MIN	TYP‡	MAX	MIN	TYP‡	MAX	
V_{IH}	High-level input voltage			2			2			V
V_{IL}	Low-level input voltage					0.7			0.8	V
V_{IK}	Input clamp voltage	V_{CC} = MIN, I_I = −18 mA				−1.5			−1.5	V
V_{OH}	High-level output voltage	V_{CC} = MIN, V_{IH} = 2 V, V_{IL} = V_{IL} max, I_{OH} = −400 μA		2.5	3.4		2.7	3.4		V
V_{OL}	Low-level output voltage	V_{CC} = MIN, V_{IH} = 2 V, V_{IL} = V_{IL} max	I_{OL} = 4 mA		0.25	0.4		0.15	0.4	V
			I_{OL} = 8 mA					0.35	0.5	
I_I	Input current at maximum input voltage	V_{CC} = MAX, V_I = 7 V				0.1			0.1	mA
I_{IH}	High-level input current	V_{CC} = MAX, V_I = 2.7 V				20			20	μA
I_{IL}	Low-level input current	V_{CC} = MAX, V_I = 0.4 V				−0.4			−0.4	mA
I_{OS}	Short-circuit output current§	V_{CC} = MAX		−20		−100	−20		−100	mA
I_{CC}	Supply current	V_{CC} = MAX, See Note 2			19	34		19	34	mA

†For conditions shown as MIN or MAX, use the appropriate value specified under recommended operating conditions for the applicable type.
‡All typical values are at V_{CC} = 5 V, T_A = 25°C.
§Not more than one output should be shorted at a time, and duration of the short-circuit should not exceed one second.
NOTE 2: I_{CC} is measured with all outputs open, clear and load inputs grounded, and all other inputs at 4.5 V.

switching characteristics, V_{CC} = 5 V, T_A = 25°C

PARAMETER	FROM INPUT	TO OUTPUT	TEST CONDITIONS	MIN	TYP	MAX	UNIT
f_{max}			C_L = 15 pF, R_L = 2 kΩ, See Figures 1 and 2	25	32		MHz
t_{PLH}	UP	$\overline{CO}$			17	26	ns
t_{PHL}					18	24	
t_{PLH}	DOWN	$\overline{BO}$			16	24	ns
t_{PHL}					15	24	
t_{PLH}	UP OR DOWN	Q			27	38	ns
t_{PHL}					30	47	
t_{PLH}	$\overline{LOAD}$	Q			24	40	ns
t_{PHL}					25	40	
t_{PHL}	CLR	Q			23	35	ns

PARAMETER MEASUREMENT INFORMATION

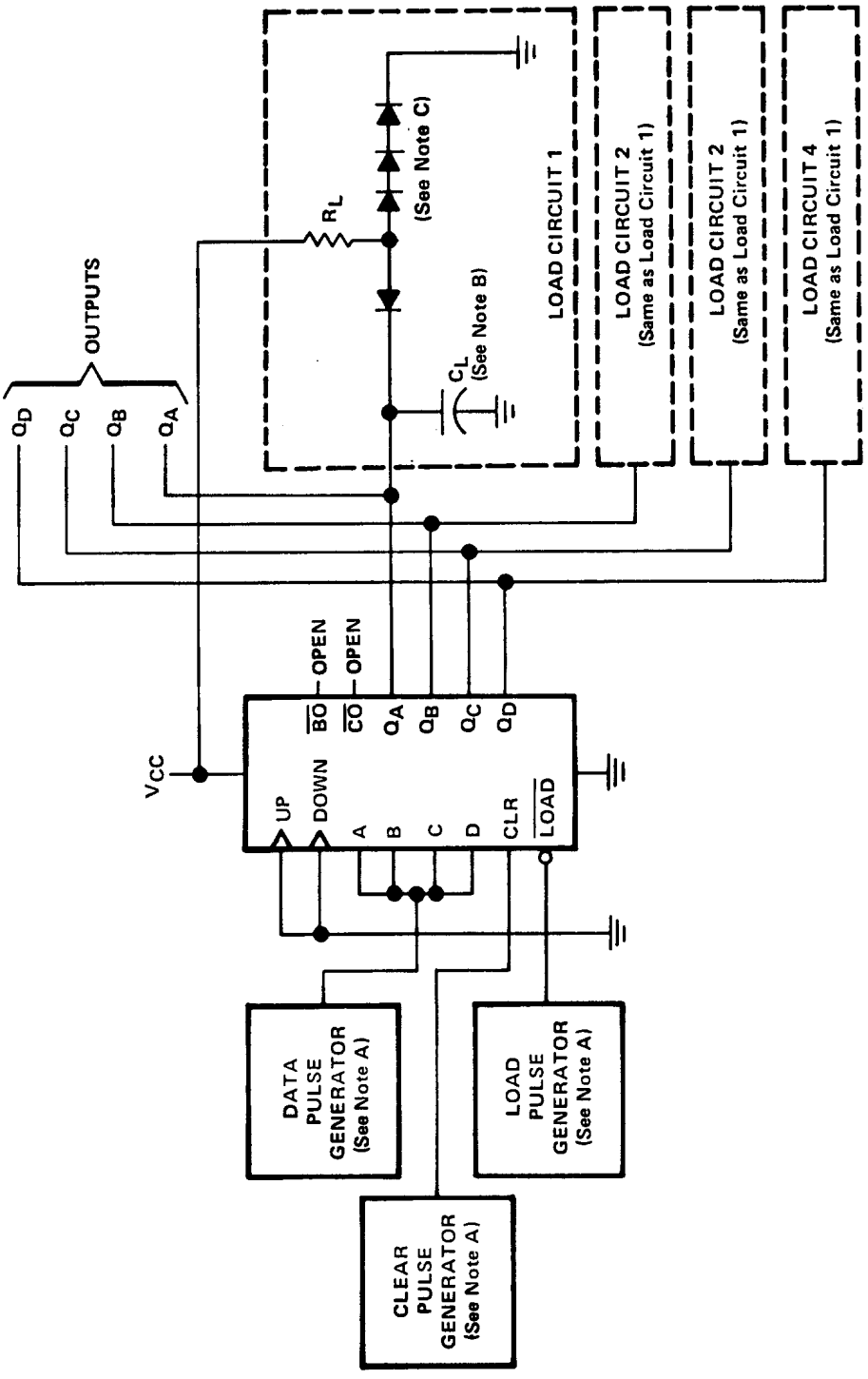

TEST CIRCUIT

NOTES: A. The pulse generators have the following characteristics: $Z_{out} \approx 50\ \Omega$ and for the data pulse generator PRR $\leq$ 500 kHz, duty cycle = 50%; for the load pulse generator PRR is two times data PRR, duty cycle = 50%
B. C_L includes probe and jig capacitance.
C. Diodes are 1N3064 or equivalent.
D. t_r and $t_f \leq 7$ ns.
E. V_{ref} is 1.5 V for '192 and '193, 1.3 V for 'LS192 and 'LS193.

FIGURE 1A – CLEAR, SETUP AND LOAD TIMES

PARAMETER MEASUREMENT INFORMATION

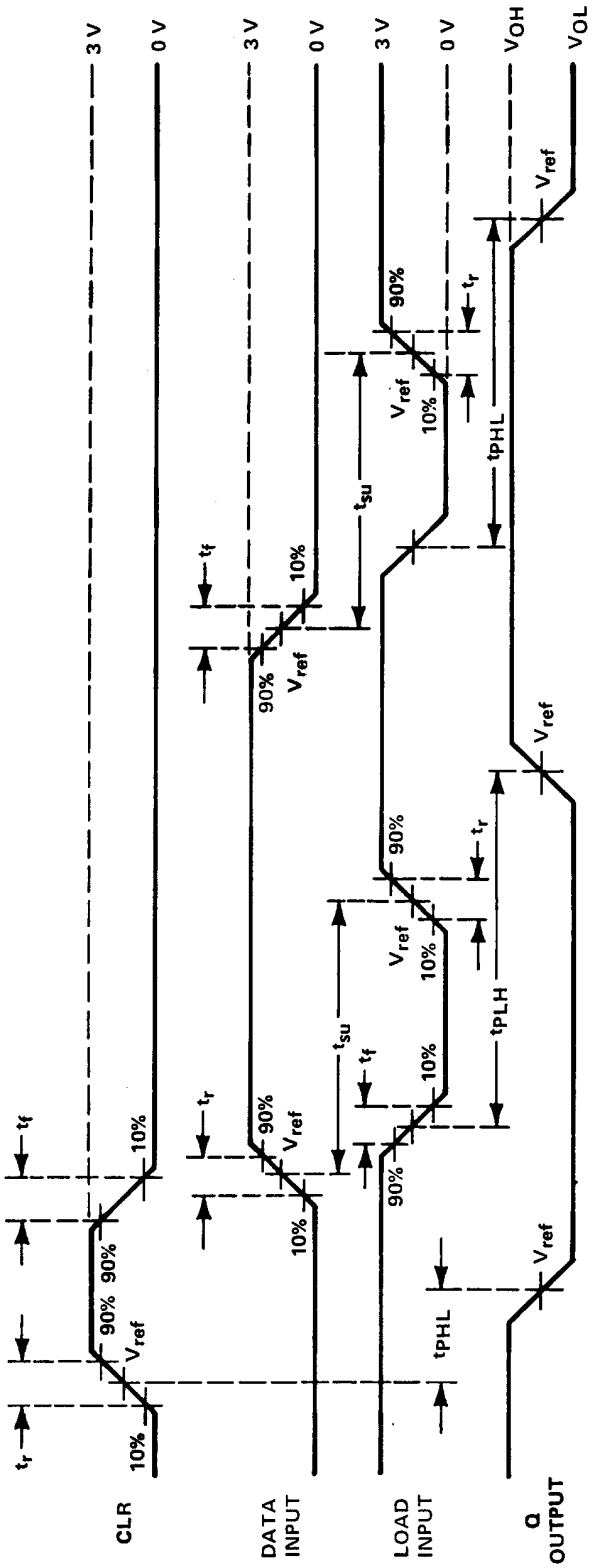

VOLTAGE WAVEFORMS

NOTES: A. The pulse generators have the following characteristics: $Z_{out} \approx 50\ \Omega$ and for the data pulse generator PRR ≤ 500 kHz, duty cycle = 50%; for the load pulse generator PRR is two times data PRR, duty cycle = 50%
B. C_L includes probe and jig capacitance.
C. Diodes are 1N3064 or equivalent.
D. t_r and $t_f \leq 7$ ns.
E. V_{ref} is 1.5 V for '192 and '193, 1.3 V for 'LS192 and 'LS193.

FIGURE 1B – CLEAR, SETUP, AND LOAD TIMES

PARAMETER MEASUREMENT INFORMATION

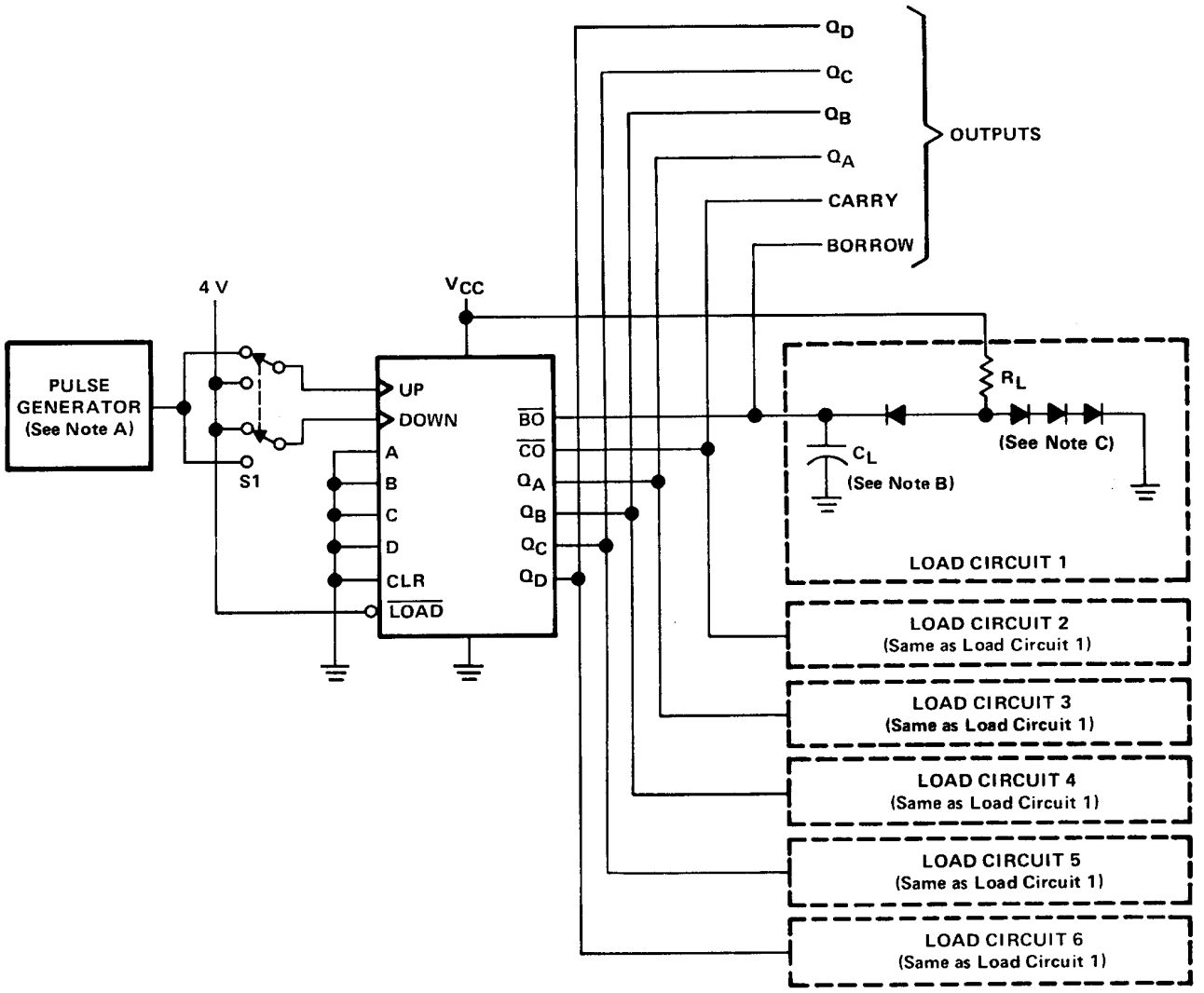

TEST CIRCUIT

NOTES: A. The pulse generators have the following characteristics: PRR ≈ 1 MHz, Z_{out} ≈ 50 Ω, duty cycle = 50%.
B. C_L includes probe and jig capacitance.
C. Diodes are 1N3064 or equivalent.
D. Cout-up and dount-down pulse shown are for the '193 and 'LS193 binary counters. Count cycle for '192 and 'LS192 decade counters is 1 through 10.
E. Waveforms for outputs Q_A, Q_B, and Q_C are omitted to simplify the drawing.
F. t_r and t_f ≤ 7 ns.
G. V_{ref} is 1.5 V for '192 and '193, 1.3 V for 'LS192 and 'LS193.

FIGURE 2A – PROPAGATION DELAY TIMES

PARAMETER MEASUREMENT INFORMATION

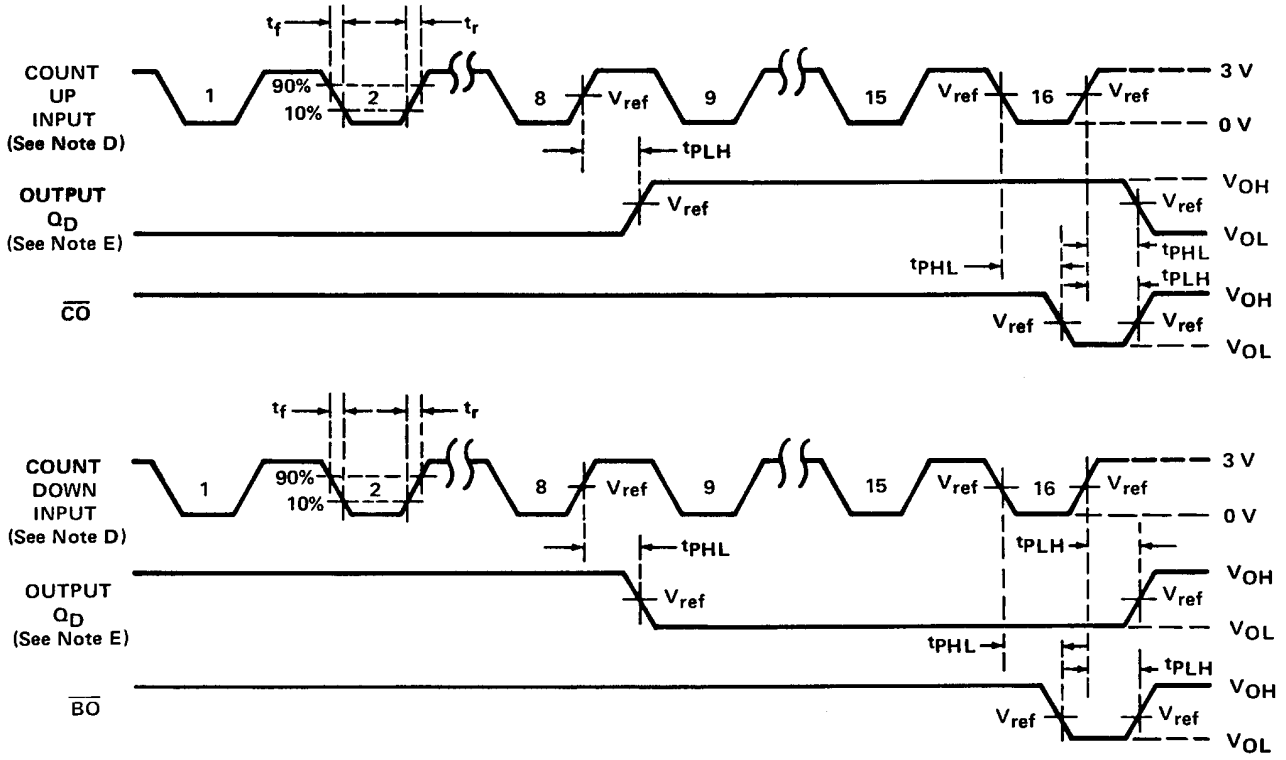

VOLTAGE WAVEFORMS

NOTES: A. The pulse generators have the following characteristics: PRR ≈ 1 MHz, Z_{out} ≈ 50 Ω, duty cycle = 50%.
B. C_L includes probe and jig capacitance.
C. Diodes are 1N3064 or equivalent.
D. Cout-up and dount-down pulse shown are for the '193 and 'LS193 binary counters. Count cycle for '192 and 'LS192 decade counters is 1 through 10.
E. Waveforms for outputs Q_A, Q_B, and Q_C are omitted to simplify the drawing.
F. t_r and t_f ≤ 7 ns.
G. V_{ref} is 1.5 V for '192 and '193, 1.3 V for 'LS192 and 'LS193.

FIGURE 2B – PROPAGATION DELAY TIMES

PACKAGING INFORMATION

Orderable Device	Status (1)	Package Type	Package Drawing	Pins	Package Qty	Eco Plan (2)	Lead/Ball Finish (6)	MSL Peak Temp (3)	Op Temp (°C)	Device Marking (4/5)	Samples
5962-9558401QEA	ACTIVE	CDIP	J	16	1	TBD	A42	N / A for Pkg Type	-55 to 125	5962-9558401QE A SNJ54192J	Samples
5962-9558401QFA	ACTIVE	CFP	W	16	1	TBD	A42	N / A for Pkg Type	-55 to 125	5962-9558401QF A SNJ54192W	Samples
5962-9558401QFA	ACTIVE	CFP	W	16	1	TBD	A42	N / A for Pkg Type	-55 to 125	5962-9558401QF A SNJ54192W	Samples
76006012A	ACTIVE	LCCC	FK	20	1	TBD	POST-PLATE	N / A for Pkg Type	-55 to 125	76006012A SNJ54LS 193FK	Samples
76006012A	ACTIVE	LCCC	FK	20	1	TBD	POST-PLATE	N / A for Pkg Type	-55 to 125	76006012A SNJ54LS 193FK	Samples
7600601EA	ACTIVE	CDIP	J	16	1	TBD	A42	N / A for Pkg Type	-55 to 125	7600601EA SNJ54LS193J	Samples
7600601EA	ACTIVE	CDIP	J	16	1	TBD	A42	N / A for Pkg Type	-55 to 125	7600601EA SNJ54LS193J	Samples
7600601FA	ACTIVE	CFP	W	16	1	TBD	A42	N / A for Pkg Type	-55 to 125	7600601FA SNJ54LS193W	Samples
7600601FA	ACTIVE	CFP	W	16	1	TBD	A42	N / A for Pkg Type	-55 to 125	7600601FA SNJ54LS193W	Samples
JM38510/01309BEA	OBSOLETE	CDIP	J	16		TBD	Call TI	Call TI	-55 to 125		
JM38510/01309BEA	OBSOLETE	CDIP	J	16		TBD	Call TI	Call TI	-55 to 125		
JM38510/31508B2A	ACTIVE	LCCC	FK	20	1	TBD	POST-PLATE	N / A for Pkg Type	-55 to 125	JM38510/ 31508B2A	Samples
JM38510/31508B2A	ACTIVE	LCCC	FK	20	1	TBD	POST-PLATE	N / A for Pkg Type	-55 to 125	JM38510/ 31508B2A	Samples
JM38510/31508BEA	ACTIVE	CDIP	J	16	1	TBD	A42	N / A for Pkg Type	-55 to 125	JM38510/ 31508BEA	Samples
JM38510/31508BEA	ACTIVE	CDIP	J	16	1	TBD	A42	N / A for Pkg Type	-55 to 125	JM38510/ 31508BEA	Samples
JM38510/31508BFA	ACTIVE	CFP	W	16	1	TBD	A42	N / A for Pkg Type	-55 to 125	JM38510/ 31508BFA	Samples

Orderable Device	Status (1)	Package Type	Package Drawing	Pins	Package Qty	Eco Plan (2)	Lead/Ball Finish (6)	MSL Peak Temp (3)	Op Temp (°C)	Device Marking (4/5)	Samples
JM38510/31508BFA	ACTIVE	CFP	W	16	1	TBD	A42	N / A for Pkg Type	-55 to 125	JM38510/ 31508BFA	Samples
JM38510/31508SFA	ACTIVE	CFP	W	16	25	TBD	A42	N / A for Pkg Type	-55 to 125	JM38510/ 31508SFA	Samples
JM38510/31508SFA	ACTIVE	CFP	W	16	25	TBD	A42	N / A for Pkg Type	-55 to 125	JM38510/ 31508SFA	Samples
M38510/31508B2A	ACTIVE	LCCC	FK	20	1	TBD	POST-PLATE	N / A for Pkg Type	-55 to 125	JM38510/ 31508B2A	Samples
M38510/31508B2A	ACTIVE	LCCC	FK	20	1	TBD	POST-PLATE	N / A for Pkg Type	-55 to 125	JM38510/ 31508B2A	Samples
M38510/31508BEA	ACTIVE	CDIP	J	16	1	TBD	A42	N / A for Pkg Type	-55 to 125	JM38510/ 31508BEA	Samples
M38510/31508BEA	ACTIVE	CDIP	J	16	1	TBD	A42	N / A for Pkg Type	-55 to 125	JM38510/ 31508BEA	Samples
M38510/31508BFA	ACTIVE	CFP	W	16	1	TBD	A42	N / A for Pkg Type	-55 to 125	JM38510/ 31508BFA	Samples
M38510/31508BFA	ACTIVE	CFP	W	16	1	TBD	A42	N / A for Pkg Type	-55 to 125	JM38510/ 31508BFA	Samples
M38510/31508SFA	ACTIVE	CFP	W	16	25	TBD	A42	N / A for Pkg Type	-55 to 125	JM38510/ 31508SFA	Samples
M38510/31508SFA	ACTIVE	CFP	W	16	25	TBD	A42	N / A for Pkg Type	-55 to 125	JM38510/ 31508SFA	Samples
SN54192J	ACTIVE	CDIP	J	16	1	TBD	A42	N / A for Pkg Type	-55 to 125	SN54192J	Samples
SN54192J	ACTIVE	CDIP	J	16	1	TBD	A42	N / A for Pkg Type	-55 to 125	SN54192J	Samples
SN54193J	OBSOLETE	CDIP	J	16		TBD	Call TI	Call TI	-55 to 125		
SN54193J	OBSOLETE	CDIP	J	16		TBD	Call TI	Call TI	-55 to 125		
SN54LS193J	ACTIVE	CDIP	J	16	1	TBD	A42	N / A for Pkg Type	-55 to 125	SN54LS193J	Samples
SN54LS193J	ACTIVE	CDIP	J	16	1	TBD	A42	N / A for Pkg Type	-55 to 125	SN54LS193J	Samples
SN74192N	OBSOLETE	PDIP	N	16		TBD	Call TI	Call TI	0 to 70		
SN74192N	OBSOLETE	PDIP	N	16		TBD	Call TI	Call TI	0 to 70		
SN74193N	OBSOLETE	PDIP	N	16		TBD	Call TI	Call TI	0 to 70		
SN74193N	OBSOLETE	PDIP	N	16		TBD	Call TI	Call TI	0 to 70		

Orderable Device	Status (1)	Package Type	Package Drawing	Pins	Package Qty	Eco Plan (2)	Lead/Ball Finish (6)	MSL Peak Temp (3)	Op Temp (°C)	Device Marking (4/5)	Samples
SN74193N3	OBSOLETE	PDIP	N	16		TBD	Call TI	Call TI	0 to 70		
SN74193N3	OBSOLETE	PDIP	N	16		TBD	Call TI	Call TI	0 to 70		
SN74LS192D	OBSOLETE	SOIC	D	16		TBD	Call TI	Call TI	0 to 70		
SN74LS192D	OBSOLETE	SOIC	D	16		TBD	Call TI	Call TI	0 to 70		
SN74LS192N	OBSOLETE	PDIP	N	16		TBD	Call TI	Call TI	0 to 70		
SN74LS192N	OBSOLETE	PDIP	N	16		TBD	Call TI	Call TI	0 to 70		
SN74LS193D	ACTIVE	SOIC	D	16	40	Green (RoHS & no Sb/Br)	CU NIPDAU	Level-1-260C-UNLIM	0 to 70	LS193	Samples
SN74LS193D	ACTIVE	SOIC	D	16	40	Green (RoHS & no Sb/Br)	CU NIPDAU	Level-1-260C-UNLIM	0 to 70	LS193	Samples
SN74LS193DR	ACTIVE	SOIC	D	16	2500	Green (RoHS & no Sb/Br)	CU NIPDAU	Level-1-260C-UNLIM	0 to 70	LS193	Samples
SN74LS193DR	ACTIVE	SOIC	D	16	2500	Green (RoHS & no Sb/Br)	CU NIPDAU	Level-1-260C-UNLIM	0 to 70	LS193	Samples
SN74LS193J	OBSOLETE	CDIP	J	16		TBD	Call TI	Call TI	0 to 70		
SN74LS193J	OBSOLETE	CDIP	J	16		TBD	Call TI	Call TI	0 to 70		
SN74LS193N	ACTIVE	PDIP	N	16	25	Pb-Free (RoHS)	CU NIPDAU	N / A for Pkg Type	0 to 70	SN74LS193N	Samples
SN74LS193N	ACTIVE	PDIP	N	16	25	Pb-Free (RoHS)	CU NIPDAU	N / A for Pkg Type	0 to 70	SN74LS193N	Samples
SN74LS193N3	OBSOLETE	PDIP	N	16		TBD	Call TI	Call TI	0 to 70		
SN74LS193N3	OBSOLETE	PDIP	N	16		TBD	Call TI	Call TI	0 to 70		
SN74LS193NE4	ACTIVE	PDIP	N	16	25	Pb-Free (RoHS)	CU NIPDAU	N / A for Pkg Type	0 to 70	SN74LS193N	Samples
SN74LS193NE4	ACTIVE	PDIP	N	16	25	Pb-Free (RoHS)	CU NIPDAU	N / A for Pkg Type	0 to 70	SN74LS193N	Samples
SN74LS193NSR	ACTIVE	SO	NS	16	2000	Green (RoHS & no Sb/Br)	CU NIPDAU	Level-1-260C-UNLIM	0 to 70	74LS193	Samples
SN74LS193NSR	ACTIVE	SO	NS	16	2000	Green (RoHS & no Sb/Br)	CU NIPDAU	Level-1-260C-UNLIM	0 to 70	74LS193	Samples
SNJ54192J	ACTIVE	CDIP	J	16	1	TBD	A42	N / A for Pkg Type	-55 to 125	5962-9558401QE A SNJ54192J	Samples
SNJ54192J	ACTIVE	CDIP	J	16	1	TBD	A42	N / A for Pkg Type	-55 to 125	5962-9558401QE A	Samples

Orderable Device	Status (1)	Package Type	Package Drawing	Pins	Package Qty	Eco Plan (2)	Lead/Ball Finish (6)	MSL Peak Temp (3)	Op Temp (°C)	Device Marking (4/5)	Samples
										SNJ54192J	
SNJ54192W	ACTIVE	CFP	W	16	1	TBD	A42	N / A for Pkg Type	-55 to 125	5962-9558401QF A SNJ54192W	Samples
SNJ54192W	ACTIVE	CFP	W	16	1	TBD	A42	N / A for Pkg Type	-55 to 125	5962-9558401QF A SNJ54192W	Samples
SNJ54193J	OBSOLETE	CDIP	J	16		TBD	Call TI	Call TI	-55 to 125		
SNJ54193J	OBSOLETE	CDIP	J	16		TBD	Call TI	Call TI	-55 to 125		
SNJ54193W	OBSOLETE	CFP	W	16		TBD	Call TI	Call TI	-55 to 125		
SNJ54193W	OBSOLETE	CFP	W	16		TBD	Call TI	Call TI	-55 to 125		
SNJ54LS193FK	ACTIVE	LCCC	FK	20	1	TBD	POST-PLATE	N / A for Pkg Type	-55 to 125	76006012A SNJ54LS 193FK	Samples
SNJ54LS193FK	ACTIVE	LCCC	FK	20	1	TBD	POST-PLATE	N / A for Pkg Type	-55 to 125	76006012A SNJ54LS 193FK	Samples
SNJ54LS193J	ACTIVE	CDIP	J	16	1	TBD	A42	N / A for Pkg Type	-55 to 125	7600601EA SNJ54LS193J	Samples
SNJ54LS193J	ACTIVE	CDIP	J	16	1	TBD	A42	N / A for Pkg Type	-55 to 125	7600601EA SNJ54LS193J	Samples
SNJ54LS193W	ACTIVE	CFP	W	16	1	TBD	A42	N / A for Pkg Type	-55 to 125	7600601FA SNJ54LS193W	Samples
SNJ54LS193W	ACTIVE	CFP	W	16	1	TBD	A42	N / A for Pkg Type	-55 to 125	7600601FA SNJ54LS193W	Samples

(1) The marketing status values are defined as follows:
ACTIVE: Product device recommended for new designs.
LIFEBUY: TI has announced that the device will be discontinued, and a lifetime-buy period is in effect.
NRND: Not recommended for new designs. Device is in production to support existing customers, but TI does not recommend using this part in a new design.
PREVIEW: Device has been announced but is not in production. Samples may or may not be available.
OBSOLETE: TI has discontinued the production of the device.

(2) Eco Plan - The planned eco-friendly classification: Pb-Free (RoHS), Pb-Free (RoHS Exempt), or Green (RoHS & no Sb/Br) - please check http://www.ti.com/productcontent for the latest availability information and additional product content details.
TBD: The Pb-Free/Green conversion plan has not been defined.
Pb-Free (RoHS): TI's terms "Lead-Free" or "Pb-Free" mean semiconductor products that are compatible with the current RoHS requirements for all 6 substances, including the requirement that lead not exceed 0.1% by weight in homogeneous materials. Where designed to be soldered at high temperatures, TI Pb-Free products are suitable for use in specified lead-free processes.

Pb-Free (RoHS Exempt): This component has a RoHS exemption for either 1) lead-based flip-chip solder bumps used between the die and package, or 2) lead-based die adhesive used between the die and leadframe. The component is otherwise considered Pb-Free (RoHS compatible) as defined above.
Green (RoHS & no Sb/Br): TI defines "Green" to mean Pb-Free (RoHS compatible), and free of Bromine (Br) and Antimony (Sb) based flame retardants (Br or Sb do not exceed 0.1% by weight in homogeneous material)

(3) MSL, Peak Temp. - The Moisture Sensitivity Level rating according to the JEDEC industry standard classifications, and peak solder temperature.

(4) There may be additional marking, which relates to the logo, the lot trace code information, or the environmental category on the device.

(5) Multiple Device Markings will be inside parentheses. Only one Device Marking contained in parentheses and separated by a "~" will appear on a device. If a line is indented then it is a continuation of the previous line and the two combined represent the entire Device Marking for that device.

(6) Lead/Ball Finish - Orderable Devices may have multiple material finish options. Finish options are separated by a vertical ruled line. Lead/Ball Finish values may wrap to two lines if the finish value exceeds the maximum column width.

Important Information and Disclaimer: The information provided on this page represents TI's knowledge and belief as of the date that it is provided. TI bases its knowledge and belief on information provided by third parties, and makes no representation or warranty as to the accuracy of such information. Efforts are underway to better integrate information from third parties. TI has taken and continues to take reasonable steps to provide representative and accurate information but may not have conducted destructive testing or chemical analysis on incoming materials and chemicals. TI and TI suppliers consider certain information to be proprietary, and thus CAS numbers and other limited information may not be available for release.

In no event shall TI's liability arising out of such information exceed the total purchase price of the TI part(s) at issue in this document sold by TI to Customer on an annual basis.

OTHER QUALIFIED VERSIONS OF SN54192, SN54193, SN54LS193, SN54LS193-SP, SN74192, SN74193, SN74LS193 :

- Catalog: SN74192, SN74193, SN74LS193, SN54LS193
- Military: SN54192, SN54193, SN54LS193
- Space: SN54LS193-SP

NOTE: Qualified Version Definitions:

- Catalog - TI's standard catalog product
- Military - QML certified for Military and Defense Applications
- Space - Radiation tolerant, ceramic packaging and qualified for use in Space-based application

TAPE AND REEL INFORMATION

REEL DIMENSIONS

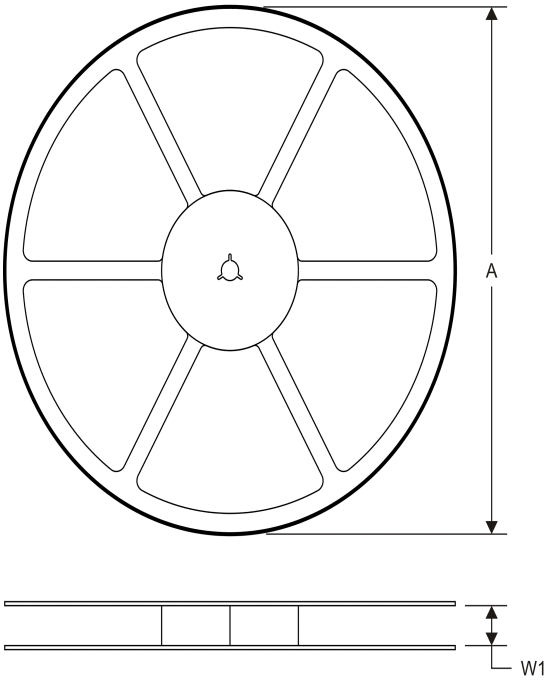

TAPE DIMENSIONS

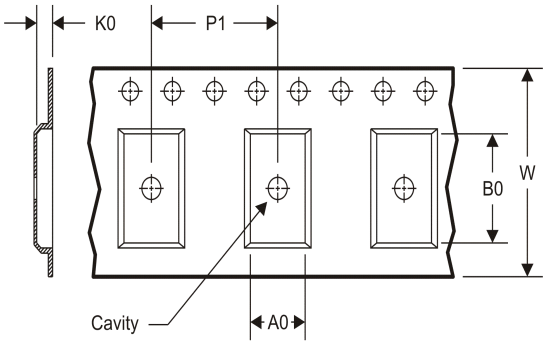

A0	Dimension designed to accommodate the component width
B0	Dimension designed to accommodate the component length
K0	Dimension designed to accommodate the component thickness
W	Overall width of the carrier tape
P1	Pitch between successive cavity centers

TAPE AND REEL INFORMATION

*All dimensions are nominal

Device	Package Type	Package Drawing	Pins	SPQ	Reel Diameter (mm)	Reel Width W1 (mm)	A0 (mm)	B0 (mm)	K0 (mm)	P1 (mm)	W (mm)	Pin1 Quadrant
SN74LS193DR	SOIC	D	16	2500	330.0	16.4	6.5	10.3	2.1	8.0	16.0	Q1
SN74LS193NSR	SO	NS	16	2000	330.0	16.4	8.2	10.5	2.5	12.0	16.0	Q1

TAPE AND REEL BOX DIMENSIONS

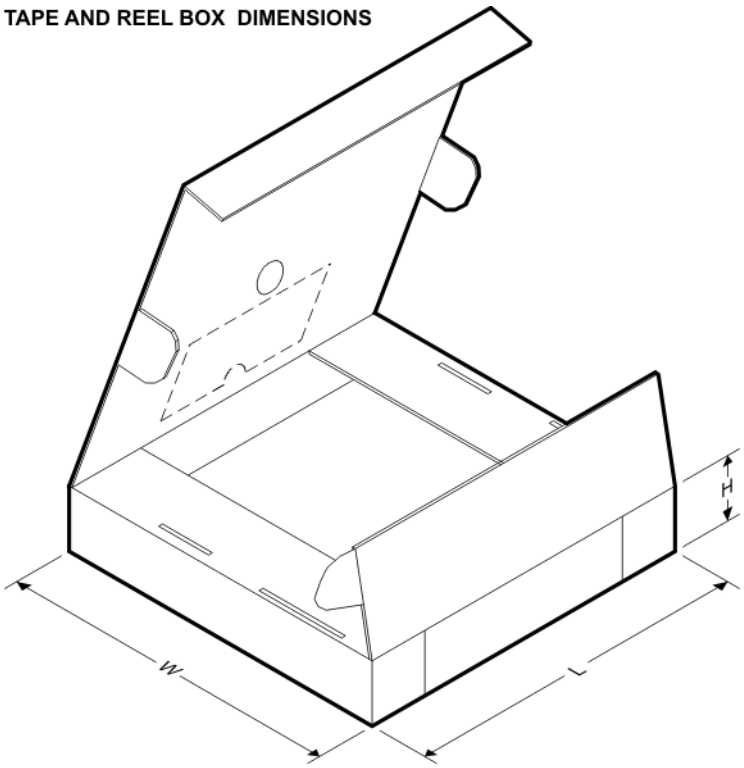

*All dimensions are nominal

Device	Package Type	Package Drawing	Pins	SPQ	Length (mm)	Width (mm)	Height (mm)
SN74LS193DR	SOIC	D	16	2500	333.2	345.9	28.6
SN74LS193NSR	SO	NS	16	2000	367.0	367.0	38.0

J (R–GDIP–T**)

14 LEADS SHOWN

CERAMIC DUAL IN–LINE PACKAGE

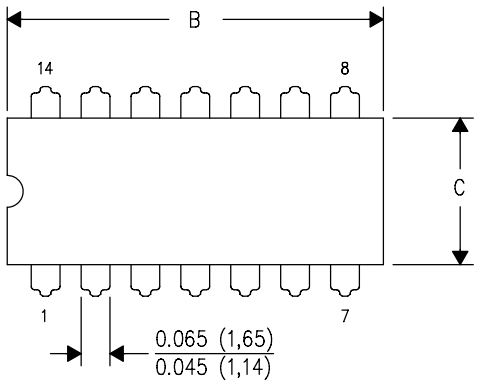

DIM \ PINS **	14	16	18	20
A	0.300 (7,62) BSC	0.300 (7,62) BSC	0.300 (7,62) BSC	0.300 (7,62) BSC
B MAX	0.785 (19,94)	.840 (21,34)	0.960 (24,38)	1.060 (26,92)
B MIN	—	—	—	—
C MAX	0.300 (7,62)	0.300 (7,62)	0.310 (7,87)	0.300 (7,62)
C MIN	0.245 (6,22)	0.245 (6,22)	0.220 (5,59)	0.245 (6,22)

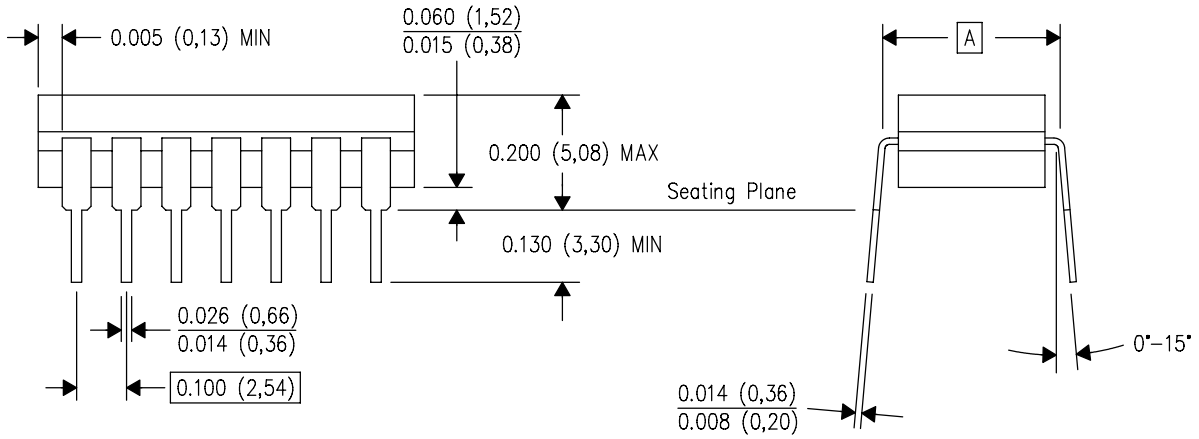

4040083/F 03/03

NOTES:
A. All linear dimensions are in inches (millimeters).
B. This drawing is subject to change without notice.
C. This package is hermetically sealed with a ceramic lid using glass frit.
D. Index point is provided on cap for terminal identification only on press ceramic glass frit seal only.
E. Falls within MIL STD 1835 GDIP1–T14, GDIP1–T16, GDIP1–T18 and GDIP1–T20.

W (R–GDFP–F16) CERAMIC DUAL FLATPACK

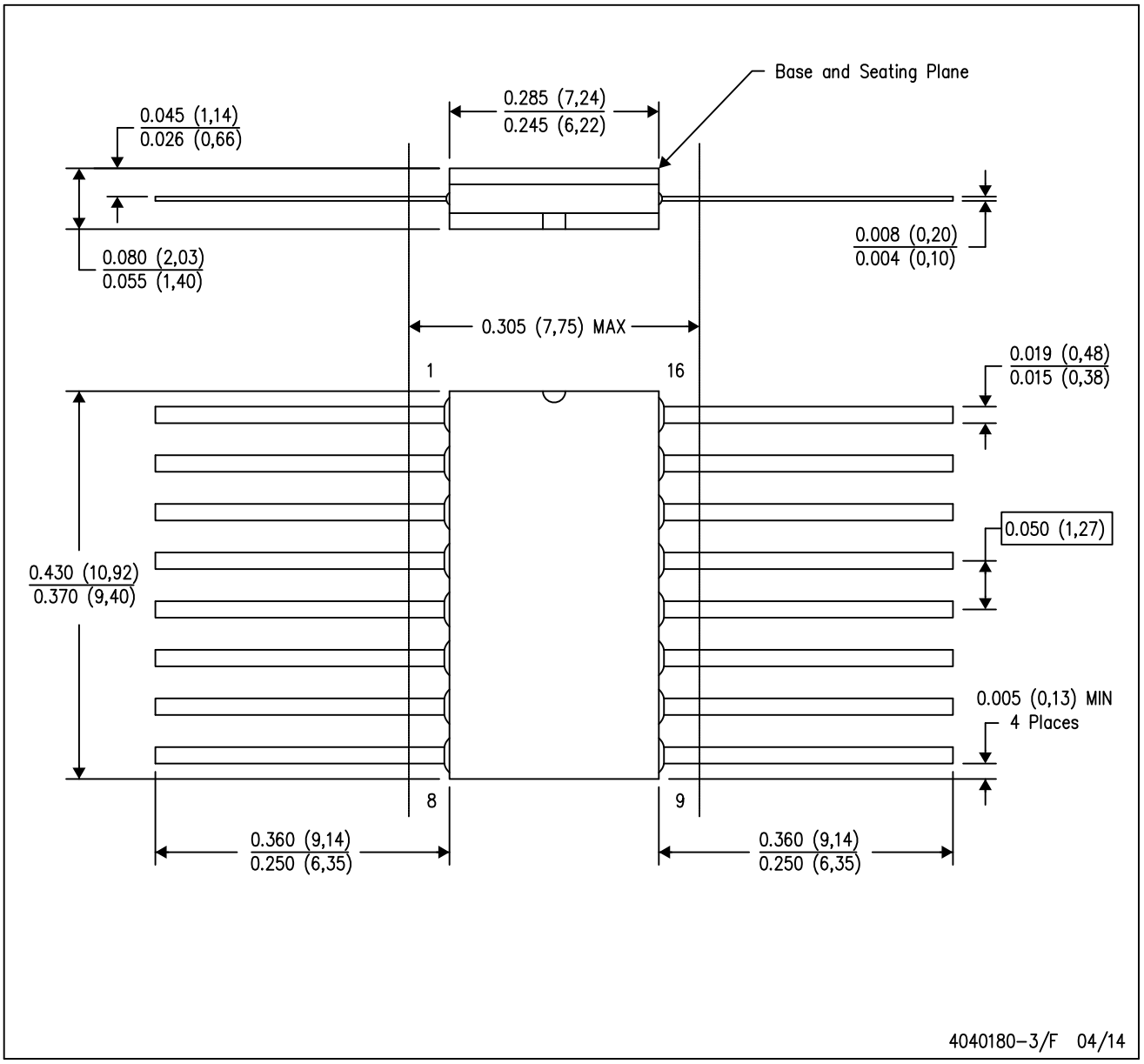

NOTES:
A. All linear dimensions are in inches (millimeters).
B. This drawing is subject to change without notice.
C. This package can be hermetically sealed with a ceramic lid using glass frit.
D. Index point is provided on cap for terminal identification only.
E. Falls within MIL STD 1835 GDFP2–F16

FK (S–CQCC–N**) LEADLESS CERAMIC CHIP CARRIER

28 TERMINAL SHOWN

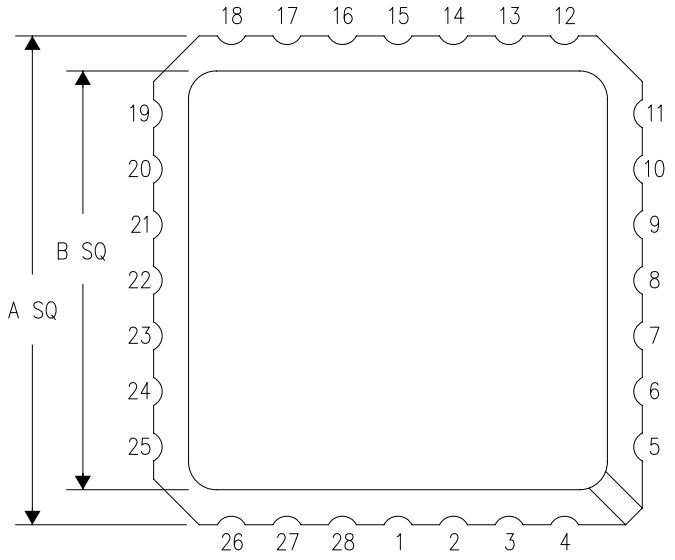

NO. OF TERMINALS **	A		B	
	MIN	MAX	MIN	MAX
20	0.342 (8,69)	0.358 (9,09)	0.307 (7,80)	0.358 (9,09)
28	0.442 (11,23)	0.458 (11,63)	0.406 (10,31)	0.458 (11,63)
44	0.640 (16,26)	0.660 (16,76)	0.495 (12,58)	0.560 (14,22)
52	0.740 (18,78)	0.761 (19,32)	0.495 (12,58)	0.560 (14,22)
68	0.938 (23,83)	0.962 (24,43)	0.850 (21,6)	0.858 (21,8)
84	1.141 (28,99)	1.165 (29,59)	1.047 (26,6)	1.063 (27,0)

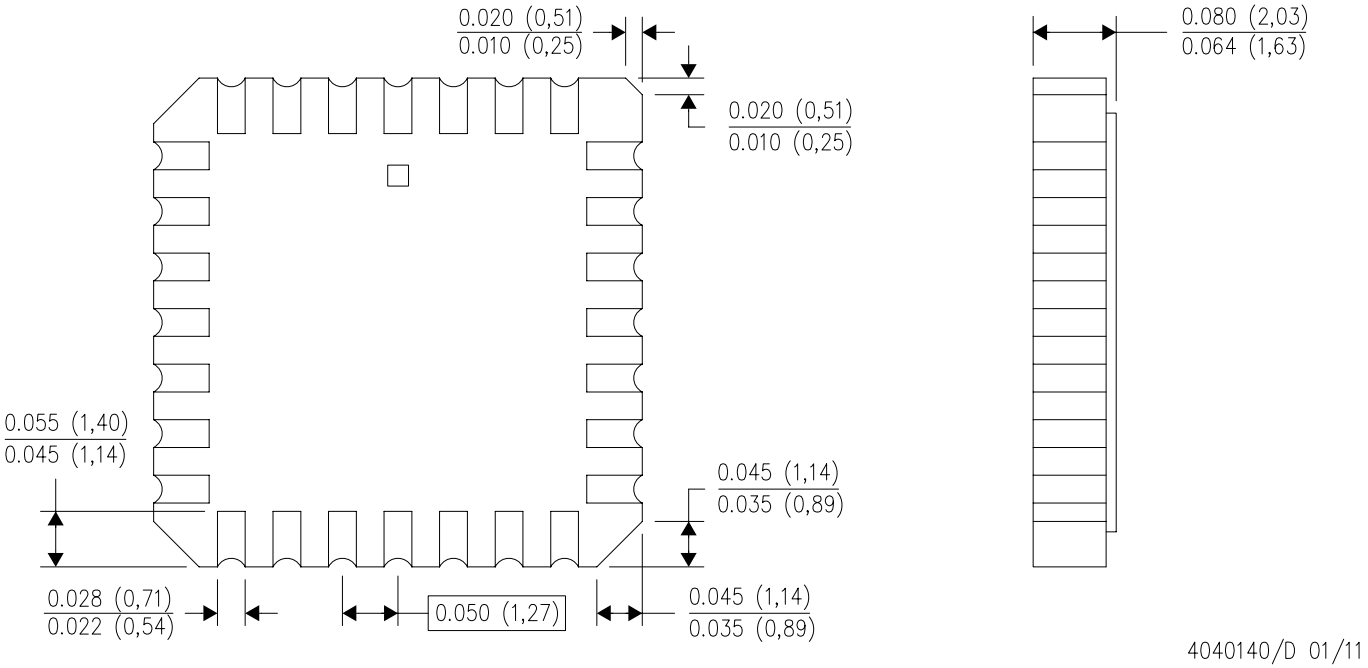

4040140/D 01/11

NOTES:
A. All linear dimensions are in inches (millimeters).
B. This drawing is subject to change without notice.
C. This package can be hermetically sealed with a metal lid.
D. Falls within JEDEC MS–004

N (R–PDIP–T**)

PLASTIC DUAL–IN–LINE PACKAGE

16 PINS SHOWN

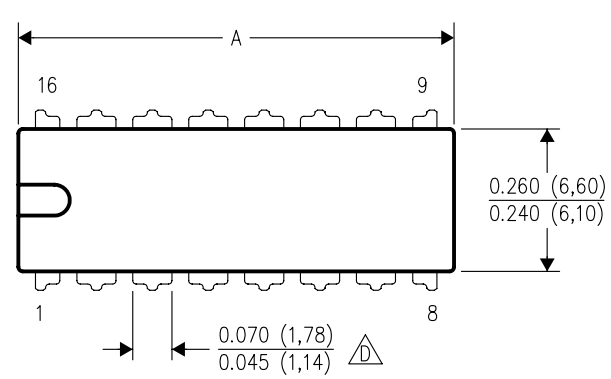

DIM \ PINS **	14	16	18	20
A MAX	0.775 (19,69)	0.775 (19,69)	0.920 (23,37)	1.060 (26,92)
A MIN	0.745 (18,92)	0.745 (18,92)	0.850 (21,59)	0.940 (23,88)
MS–001 VARIATION (C)	AA	BB	AC	AD

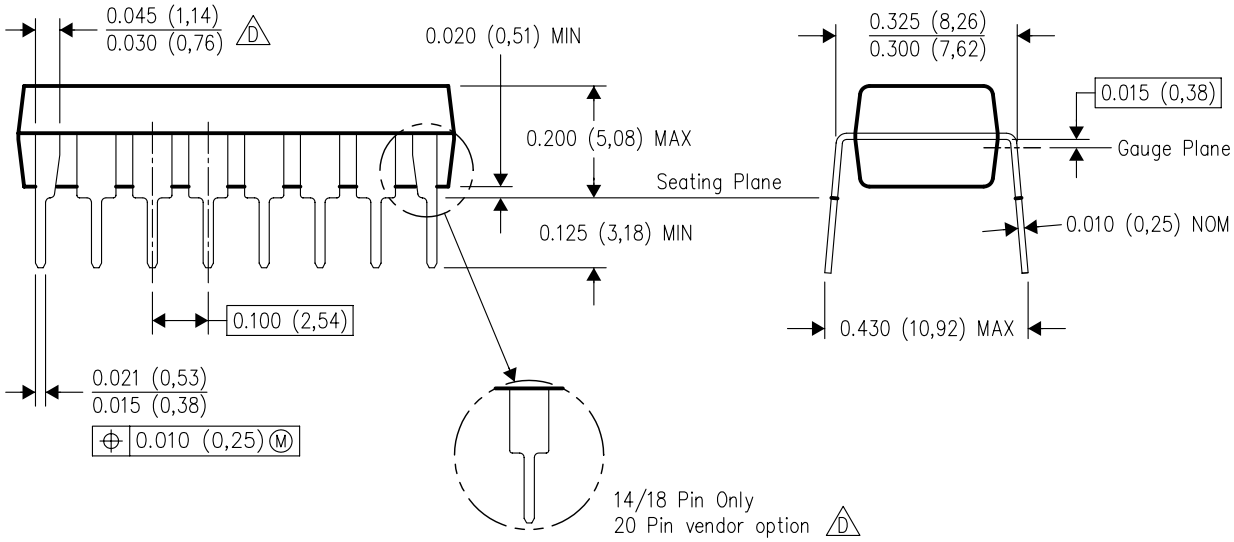

4040049/E 12/2002

NOTES:
A. All linear dimensions are in inches (millimeters).
B. This drawing is subject to change without notice.
C. Falls within JEDEC MS–001, except 18 and 20 pin minimum body length (Dim A).
D. The 20 pin end lead shoulder width is a vendor option, either half or full width.

D (R–PDSO–G16) PLASTIC SMALL OUTLINE

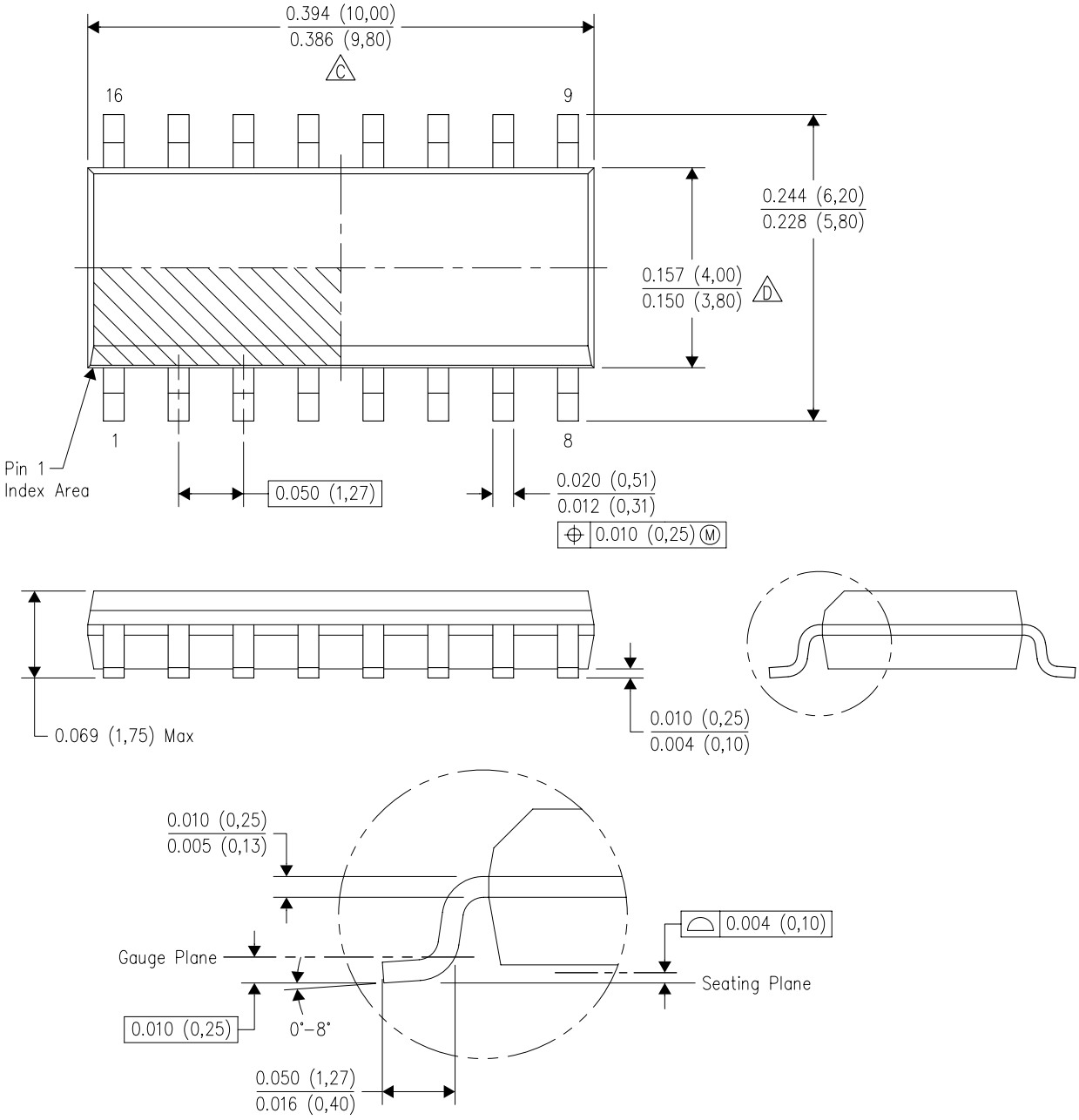

NOTES:
A. All linear dimensions are in inches (millimeters).
B. This drawing is subject to change without notice.
C. Body length does not include mold flash, protrusions, or gate burrs. Mold flash, protrusions, or gate burrs shall not exceed 0.006 (0,15) each side.
D. Body width does not include interlead flash. Interlead flash shall not exceed 0.017 (0,43) each side.
E. Reference JEDEC MS–012 variation AC.

D (R–PDSO–G16) PLASTIC SMALL OUTLINE

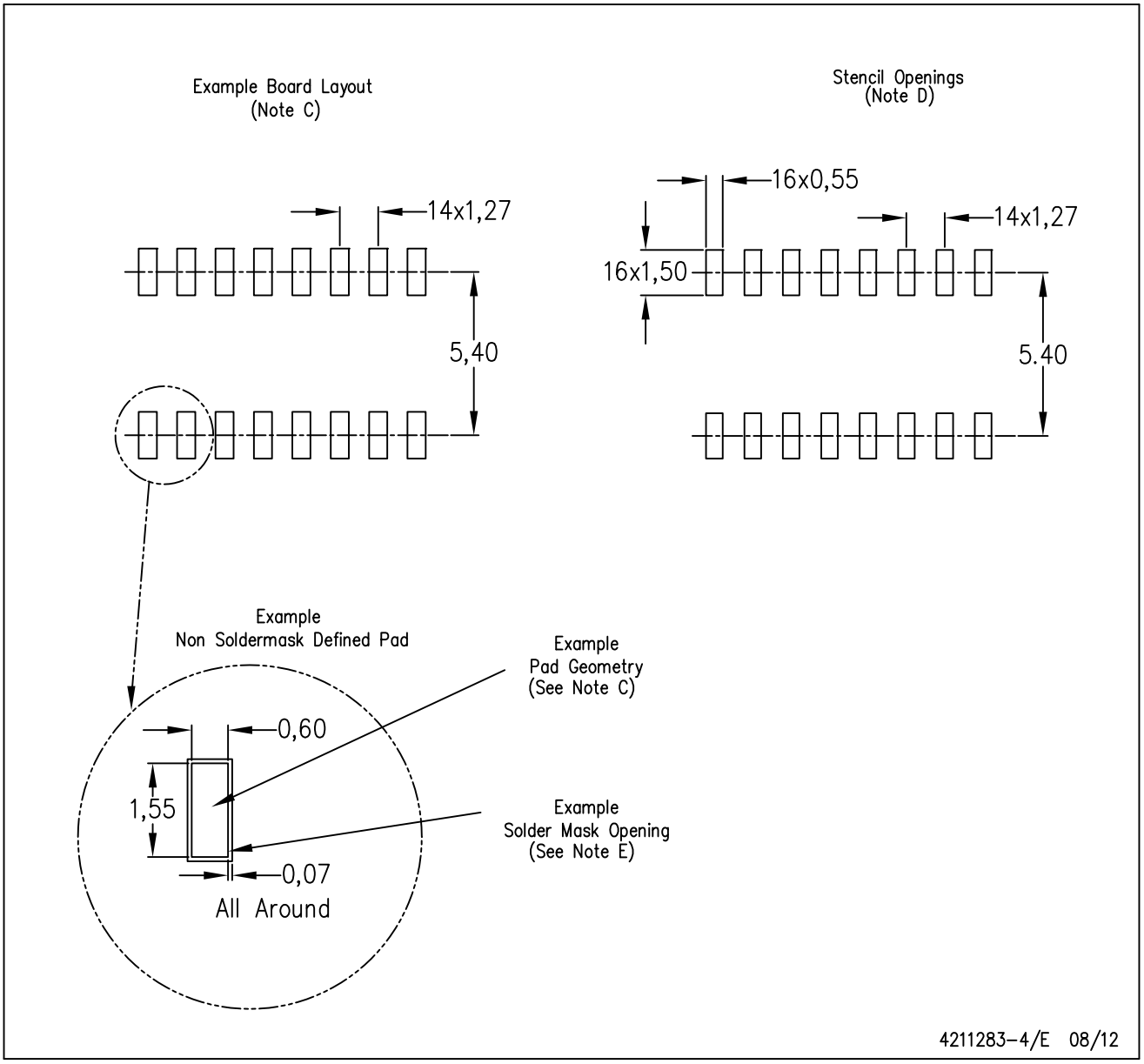

NOTES:
A. All linear dimensions are in millimeters.
B. This drawing is subject to change without notice.
C. Publication IPC–7351 is recommended for alternate designs.
D. Laser cutting apertures with trapezoidal walls and also rounding corners will offer better paste release. Customers should contact their board assembly site for stencil design recommendations. Refer to IPC–7525 for other stencil recommendations.
E. Customers should contact their board fabrication site for solder mask tolerances between and around signal pads.

MECHANICAL DATA

NS (R-PDSO-G)** **PLASTIC SMALL-OUTLINE PACKAGE**

14-PINS SHOWN

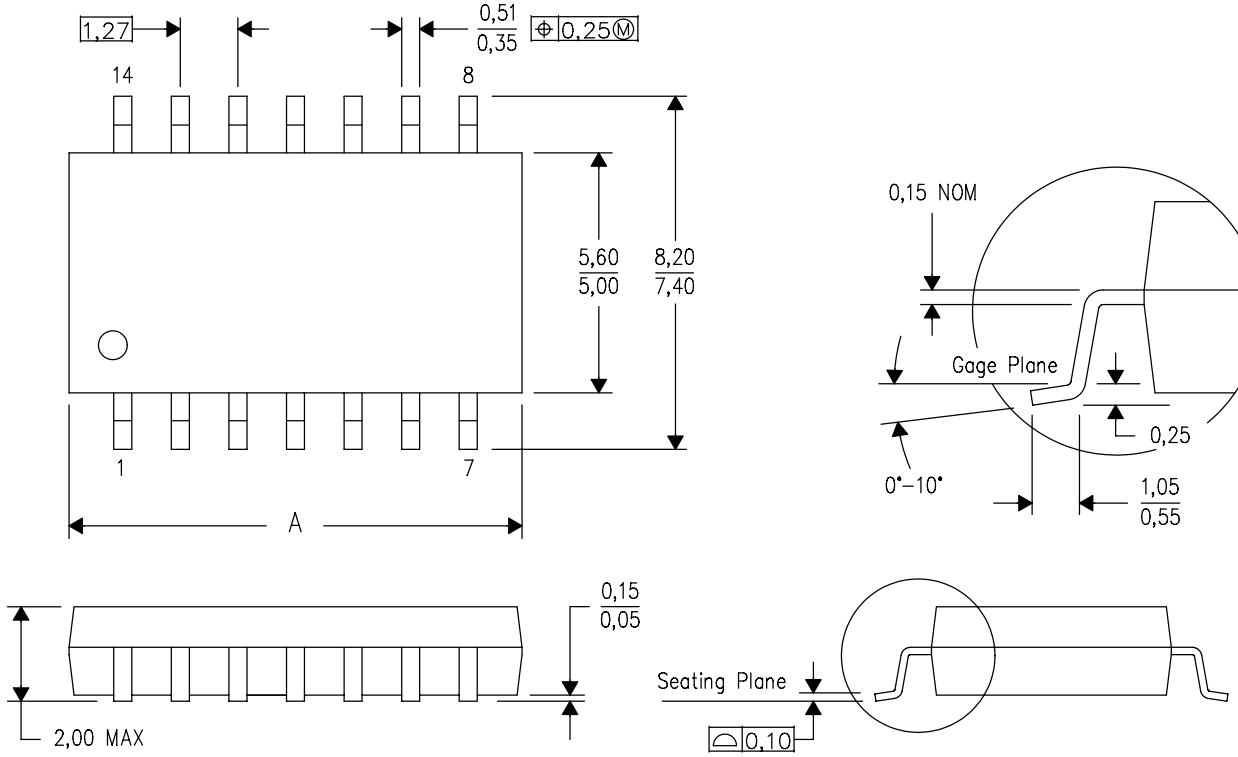

DIM \ PINS **	14	16	20	24
A MAX	10,50	10,50	12,90	15,30
A MIN	9,90	9,90	12,30	14,70

4040062/C 03/03

NOTES:
A. All linear dimensions are in millimeters.
B. This drawing is subject to change without notice.
C. Body dimensions do not include mold flash or protrusion, not to exceed 0,15.

IMPORTANT NOTICE

Texas Instruments Incorporated and its subsidiaries (TI) reserve the right to make corrections, enhancements, improvements and other changes to its semiconductor products and services per JESD46, latest issue, and to discontinue any product or service per JESD48, latest issue. Buyers should obtain the latest relevant information before placing orders and should verify that such information is current and complete. All semiconductor products (also referred to herein as “components”) are sold subject to TI’s terms and conditions of sale supplied at the time of order acknowledgment.

TI warrants performance of its components to the specifications applicable at the time of sale, in accordance with the warranty in TI’s terms and conditions of sale of semiconductor products. Testing and other quality control techniques are used to the extent TI deems necessary to support this warranty. Except where mandated by applicable law, testing of all parameters of each component is not necessarily performed.

TI assumes no liability for applications assistance or the design of Buyers’ products. Buyers are responsible for their products and applications using TI components. To minimize the risks associated with Buyers’ products and applications, Buyers should provide adequate design and operating safeguards.

TI does not warrant or represent that any license, either express or implied, is granted under any patent right, copyright, mask work right, or other intellectual property right relating to any combination, machine, or process in which TI components or services are used. Information published by TI regarding third-party products or services does not constitute a license to use such products or services or a warranty or endorsement thereof. Use of such information may require a license from a third party under the patents or other intellectual property of the third party, or a license from TI under the patents or other intellectual property of TI.

Reproduction of significant portions of TI information in TI data books or data sheets is permissible only if reproduction is without alteration and is accompanied by all associated warranties, conditions, limitations, and notices. TI is not responsible or liable for such altered documentation. Information of third parties may be subject to additional restrictions.

Resale of TI components or services with statements different from or beyond the parameters stated by TI for that component or service voids all express and any implied warranties for the associated TI component or service and is an unfair and deceptive business practice. TI is not responsible or liable for any such statements.

Buyer acknowledges and agrees that it is solely responsible for compliance with all legal, regulatory and safety-related requirements concerning its products, and any use of TI components in its applications, notwithstanding any applications-related information or support that may be provided by TI. Buyer represents and agrees that it has all the necessary expertise to create and implement safeguards which anticipate dangerous consequences of failures, monitor failures and their consequences, lessen the likelihood of failures that might cause harm and take appropriate remedial actions. Buyer will fully indemnify TI and its representatives against any damages arising out of the use of any TI components in safety-critical applications.

In some cases, TI components may be promoted specifically to facilitate safety-related applications. With such components, TI’s goal is to help enable customers to design and create their own end-product solutions that meet applicable functional safety standards and requirements. Nonetheless, such components are subject to these terms.

No TI components are authorized for use in FDA Class III (or similar life-critical medical equipment) unless authorized officers of the parties have executed a special agreement specifically governing such use.

Only those TI components which TI has specifically designated as military grade or “enhanced plastic” are designed and intended for use in military/aerospace applications or environments. Buyer acknowledges and agrees that any military or aerospace use of TI components which have ***not*** been so designated is solely at the Buyer's risk, and that Buyer is solely responsible for compliance with all legal and regulatory requirements in connection with such use.

TI has specifically designated certain components as meeting ISO/TS16949 requirements, mainly for automotive use. In any case of use of non-designated products, TI will not be responsible for any failure to meet ISO/TS16949.

Products		**Applications**	
Audio	www.ti.com/audio	Automotive and Transportation	www.ti.com/automotive
Amplifiers	amplifier.ti.com	Communications and Telecom	www.ti.com/communications
Data Converters	dataconverter.ti.com	Computers and Peripherals	www.ti.com/computers
DLP® Products	www.dlp.com	Consumer Electronics	www.ti.com/consumer-apps
DSP	dsp.ti.com	Energy and Lighting	www.ti.com/energy
Clocks and Timers	www.ti.com/clocks	Industrial	www.ti.com/industrial
Interface	interface.ti.com	Medical	www.ti.com/medical
Logic	logic.ti.com	Security	www.ti.com/security
Power Mgmt	power.ti.com	Space, Avionics and Defense	www.ti.com/space-avionics-defense
Microcontrollers	microcontroller.ti.com	Video and Imaging	www.ti.com/video
RFID	www.ti-rfid.com		
OMAP Applications Processors	www.ti.com/omap	**TI E2E Community**	e2e.ti.com
Wireless Connectivity	www.ti.com/wirelessconnectivity		

Mailing Address: Texas Instruments, Post Office Box 655303, Dallas, Texas 75265
Copyright © 2015, Texas Instruments Incorporated