MOTOROLA

QUAD 2-INPUT MULTIPLEXER

SN54/74LS158

The LSTTL/MSI SN54L/74LS158 is a high speed Quad 2-input Multiplexer. It selects four bits of data from two sources using the common Select and Enable inputs. The four buffered outputs present the selected data in the inverted form. The LS158 can also generate any four of the 16 different functions of two variables. The LS158 is fabricated with the Schottky barrier diode process for high speed and is completely compatible with all Motorola TTL families.

- Schottky Process for High Speed
- Multifunction Capability
- Inverted Outputs
- Input Clamp Diodes Limit High Speed Termination Effects
- ESD > 3500 Volts
- Special Circuitry Ensures Glitch Free Multiplexing

QUAD 2-INPUT MULTIPLEXER

LOW POWER SCHOTTKY

CONNECTION DIAGRAM DIP (TOP VIEW)

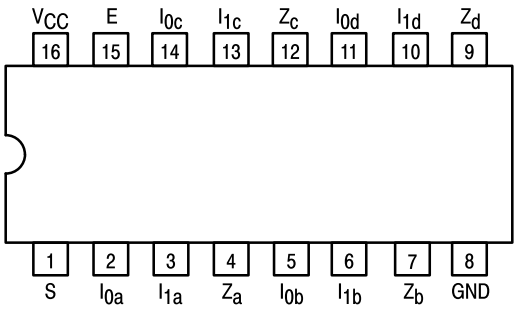

NOTE:
The Flatpak version has the same pinouts (Connection Diagram) as the Dual In-Line Package.

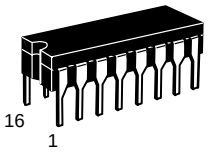

J SUFFIX
CERAMIC
CASE 620-09

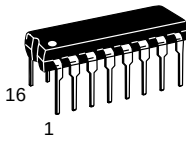

N SUFFIX
PLASTIC
CASE 648-08

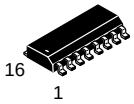

D SUFFIX
SOIC
CASE 751B-03

PIN NAMES

		LOADING (Note a) HIGH	LOW
$\overline{S}$	Common Select Input	1.0 U.L.	0.5 U.L.
E	Enable (Active LOW) Input	1.0 U.L.	0.5 U.L.
$I_{0a}-I_{0d}$	Data Inputs from Source 0	0.5 U.L.	0.25 U.L.
$I_{1a}-I_{1d}$	Data Inputs from Source 1	0.5 U.L.	0.25 U.L.
Z_a-Z_d	Inverted Outputs (Note b)	10 U.L.	5 (2.5) U.L.

NOTES:
a) 1 TTL Unit Load (U.L.) = 40 µA HIGH/1.6 mA LOW.
b) The Output LOW drive factor is 2.5 U.L. for Military (54) and 5 U.L. for Commercial (74) Temperature Ranges.

ORDERING INFORMATION

SN54LSXXXJ	Ceramic
SN74LSXXXN	Plastic
SN74LSXXXD	SOIC

LOGIC DIAGRAM

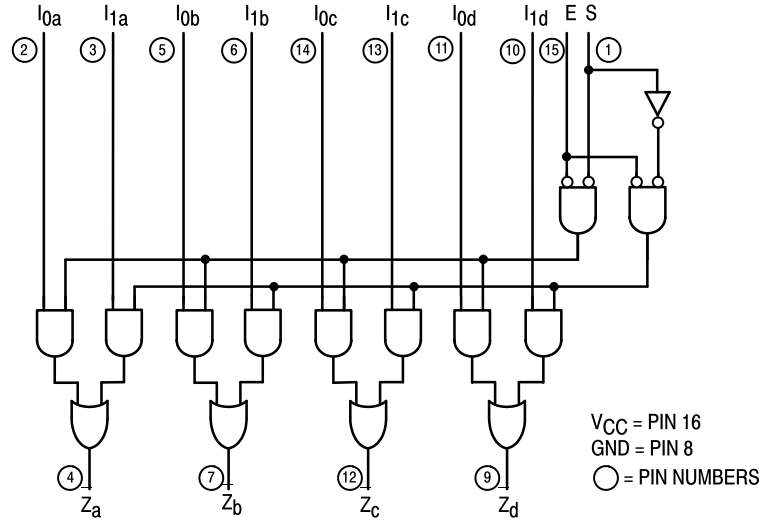

LOGIC SYMBOL

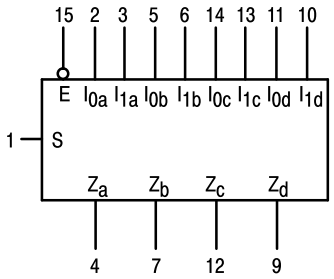

VCC = PIN 16
GND = PIN 8

FUNCTIONAL DESCRIPTION

The LS158 is a Quad 2-input Multiplexer fabricated with the Schottky barrier diode process for high speed. It selects four bits of data from two sources under the control of a common Select Input (S) and presents the data in inverted form at the four outputs. The Enable Input ($\overline{E}$) is active LOW. When $\overline{E}$ is HIGH, all of the outputs ($\overline{Z}$) are forced HIGH regardless of all other inputs.

The LS158 is the logic implementation of a 4-pole, 2-position switch where the position of the switch is determined by the logic levels supplied to the Select Input.

A common use of the LS158 is the moving of data from two groups of registers to four common output busses. The particular register from which the data comes is determined by the state of the Select Input. A less obvious use is as a function generator. The LS158 can generate four functions of two variables with one variable common. This is useful for implementing gating functions.

TRUTH TABLE

ENABLE	SELECT INPUT	INPUTS		OUTPUT
$\overline{E}$	S	I_0	I_1	$\overline{Z}$
H	X	X	X	H
L	L	L	X	H
L	L	H	X	L
L	H	X	L	H
L	H	X	H	L

H = HIGH Voltage Level
L = LOW Voltage Level
X = Don't Care

GUARANTEED OPERATING RANGES

Symbol	Parameter		Min	Typ	Max	Unit
V_{CC}	Supply Voltage	54 74	4.5 4.75	5.0 5.0	5.5 5.25	V
T_A	Operating Ambient Temperature Range	54 74	–55 0	25 25	125 70	°C
I_{OH}	Output Current — High	54, 74			–0.4	mA
I_{OL}	Output Current — Low	54 74			4.0 8.0	mA

DC CHARACTERISTICS OVER OPERATING TEMPERATURE RANGE (unless otherwise specified)

Symbol	Parameter		Limits Min	Limits Typ	Limits Max	Unit	Test Conditions	
V_{IH}	Input HIGH Voltage		2.0			V	Guaranteed Input HIGH Voltage for All Inputs	
V_{IL}	Input LOW Voltage	54			0.7	V	Guaranteed Input LOW Voltage for All Inputs	
		74			0.8			
V_{IK}	Input Clamp Diode Voltage			−0.65	−1.5	V	V_{CC} = MIN, I_{IN} = −18 mA	
V_{OH}	Output HIGH Voltage	54	2.5	3.5		V	V_{CC} = MIN, I_{OH} = MAX, V_{IN} = V_{IH} or V_{IL} per Truth Table	
		74	2.7	3.5		V		
V_{OL}	Output LOW Voltage	54, 74		0.25	0.4	V	I_{OL} = 4.0 mA	V_{CC} = V_{CC} MIN, V_{IN} = V_{IL} or V_{IH} per Truth Table
		74		0.35	0.5	V	I_{OL} = 8.0 mA	
I_{IH}	Input HIGH Current $\overline{I_0}$, I_1 E, S				20 40	μA	V_{CC} = MAX, V_{IN} = 2.7 V	
	$\overline{I_0}$, I_1 E, S				0.1 0.2	mA	V_{CC} = MAX, V_{IN} = 7.0 V	
I_{IL}	Input LOW Current $\overline{I_0}$, I_1 E, S				−0.4 −0.8	mA	V_{CC} = MAX, V_{IN} = 0.4 V	
I_{OS}	Short Circuit Current (Note 1)		−20		−100	mA	V_{CC} = MAX	
I_{CC}	Power Supply Current				8.0	mA	V_{CC} = MAX	All inputs at 4.5 V. All outputs open.
I_{CC}	Power Supply Current				11	mA	V_{CC} = MAX	All other input combinations. All outputs open.

Note 1: Not more than one output should be shorted at a time, nor for more than 1 second.

AC CHARACTERISTICS (T_A = 25°C)

Symbol	Parameter	Limits Min	Limits Typ	Limits Max	Unit	Test Conditions	
t_{PLH} t_{PHL}	Propagation Delay Data to Output		7.0 10	12 15	ns	Figure 2	V_{CC} = 5.0 V C_L = 15 pF
t_{PLH} t_{PHL}	Propagation Delay Enable to Output		11 18	17 24	ns	Figure 1	
t_{PLH} t_{PHL}	Propagation Delay Select to Output		13 16	20 24	ns	Figure 2	

AC WAVEFORMS

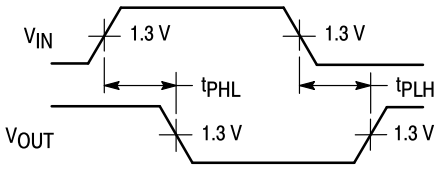

Figure 1

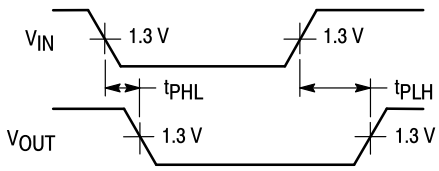

Figure 2

Case 751B-03 D Suffix
16-Pin Plastic
SO-16

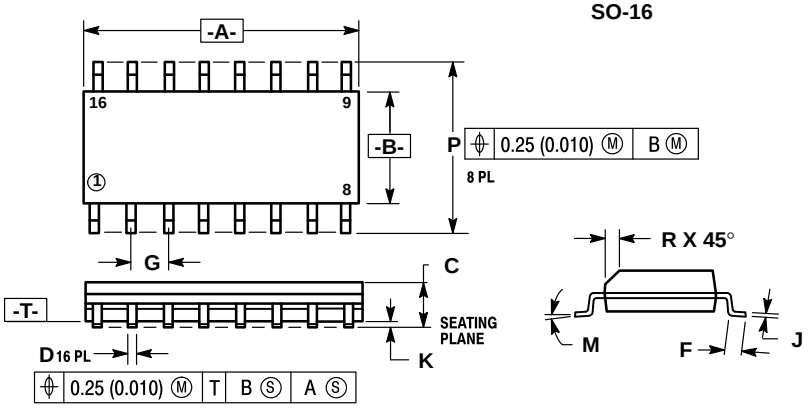

NOTES:
1. DIMENSIONING AND TOLERANCING PER ANSI Y14.5M, 1982.
2. CONTROLLING DIMENSION: MILLIMETER.
3. DIMENSION A AND B DO NOT INCLUDE MOLD PROTRUSION.
4. MAXIMUM MOLD PROTRUSION 0.15 (0.006) PER SIDE.
5. 751B-01 IS OBSOLETE, NEW STANDARD 751B-03.

	MILLIMETERS		INCHES	
DIM	MIN	MAX	MIN	MAX
A	9.80	10.00	0.386	0.393
B	3.80	4.00	0.150	0.157
C	1.35	1.75	0.054	0.068
D	0.35	0.49	0.014	0.019
F	0.40	1.25	0.016	0.049
G	1.27 BSC		0.050 BSC	
J	0.19	0.25	0.008	0.009
K	0.10	0.25	0.004	0.009
M	0°	7°	0°	7°
P	5.80	6.20	0.229	0.244
R	0.25	0.50	0.010	0.019

Case 648-08 N Suffix
16-Pin Plastic

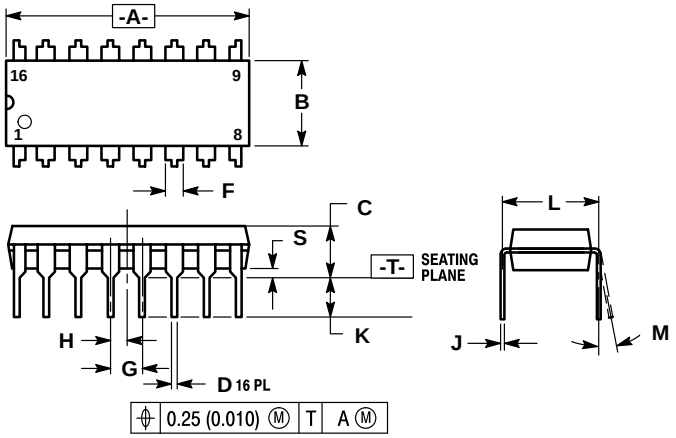

NOTES:
1. DIMENSIONING AND TOLERANCING PER ANSI Y14.5M, 1982.
2. CONTROLLING DIMENSION: INCH.
3. DIMENSION "L" TO CENTER OF LEADS WHEN FORMED PARALLEL.
4. DIMENSION "B" DOES NOT INCLUDE MOLD FLASH.
5. ROUNDED CORNERS OPTIONAL.
6. 648-01 THRU -07 OBSOLETE, NEW STANDARD 648-08.

	MILLIMETERS		INCHES	
DIM	MIN	MAX	MIN	MAX
A	18.80	19.55	0.740	0.770
B	6.35	6.85	0.250	0.270
C	3.69	4.44	0.145	0.175
D	0.39	0.53	0.015	0.021
F	1.02	1.77	0.040	0.070
G	2.54 BSC		0.100 BSC	
H	1.27 BSC		0.050 BSC	
J	0.21	0.38	0.008	0.015
K	2.80	3.30	0.110	0.130
L	7.50	7.74	0.295	0.305
M	0°	10°	0°	10°
S	0.51	1.01	0.020	0.040

Case 620-09 J Suffix
16-Pin Ceramic Dual In-Line

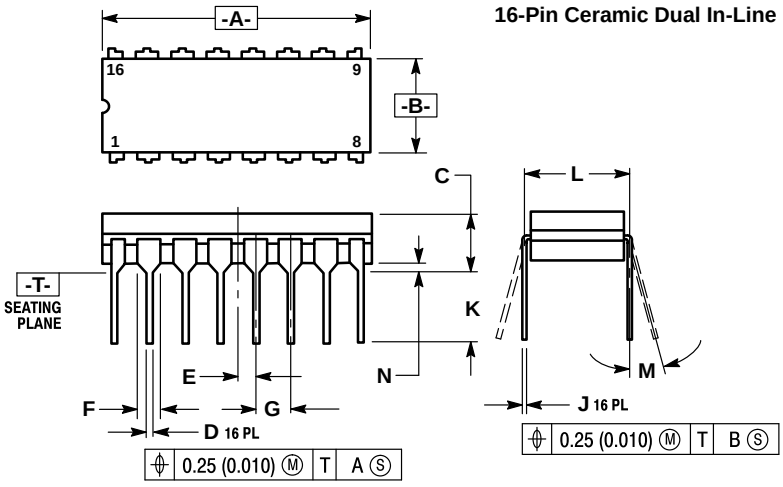

NOTES:
1. DIMENSIONING AND TOLERANCING PER ANSI Y14.5M, 1982.
2. CONTROLLING DIMENSION: INCH.
3. DIMENSION L TO CENTER OF LEAD WHEN FORMED PARALLEL.
4. DIM F MAY NARROW TO 0.76 (0.030) WHERE THE LEAD ENTERS THE CERAMIC BODY.
5. 620-01 THRU -08 OBSOLETE, NEW STANDARD 620-09.

	MILLIMETERS		INCHES	
DIM	MIN	MAX	MIN	MAX
A	19.05	19.55	0.750	0.770
B	6.10	7.36	0.240	0.290
C	—	4.19	—	0.165
D	0.39	0.53	0.015	0.021
E	1.27 BSC		0.050 BSC	
F	1.40	1.77	0.055	0.070
G	2.54 BSC		0.100 BSC	
J	0.23	0.27	0.009	0.011
K	—	5.08	—	0.200
L	7.62 BSC		0.300 BSC	
M	0°	15°	0°	15°
N	0.39	0.88	0.015	0.035

Motorola reserves the right to make changes without further notice to any products herein. Motorola makes no warranty, representation or guarantee regarding the suitability of its products for any particular purpose, nor does Motorola assume any liability arising out of the application or use of any product or circuit, and specifically disclaims any and all liability, including without limitation consequential or incidental damages. “Typical” parameters can and do vary in different applications. All operating parameters, including “Typicals” must be validated for each customer application by customer’s technical experts. Motorola does not convey any license under its patent rights nor the rights of others. Motorola products are not designed, intended, or authorized for use as components in systems intended for surgical implant into the body, or other applications intended to support or sustain life, or for any other application in which the failure of the Motorola product could create a situation where personal injury or death may occur. Should Buyer purchase or use Motorola products for any such unintended or unauthorized application, Buyer shall indemnify and hold Motorola and its officers, employees, subsidiaries, affiliates, and distributors harmless against all claims, costs, damages, and expenses, and reasonable attorney fees arising out of, directly or indirectly, any claim of personal injury or death associated with such unintended or unauthorized use, even if such claim alleges that Motorola was negligent regarding the design or manufacture of the part. Motorola and ' are registered trademarks of Motorola, Inc. Motorola, Inc. is an Equal Opportunity/Affirmative Action Employer.

Literature Distribution Centers:
USA: Motorola Literature Distribution; P.O. Box 20912; Phoenix, Arizona 85036.
EUROPE: Motorola Ltd.; European Literature Centre; 88 Tanners Drive, Blakelands, Milton Keynes, MK14 5BP, England.
JAPAN: Nippon Motorola Ltd.; 4-32-1, Nishi-Gotanda, Shinagawa-ku, Tokyo 141, Japan.
ASIA PACIFIC: Motorola Semiconductors H.K. Ltd.; Silicon Harbour Center, No. 2 Dai King Street, Tai Po Industrial Estate, Tai Po, N.T., Hong Kong.