- **3-State Bus Driving Inverting Outputs**
- **Buffered Control Inputs**
- **Package Options Include Plastic Small-Outline (DW), Ceramic Chip Carriers (FK), and Standard Plastic (N) and Ceramic (J) 300-mil DIPs**

SN54ALS534A . . . J PACKAGE
SN74ALS534A, SN74AS534 . . . DW OR N PACKAGE
(TOP VIEW)

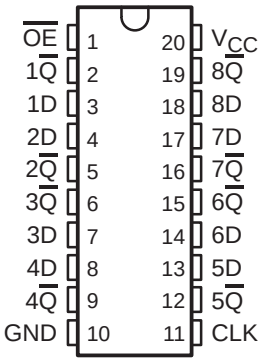

SN54ALS534A . . . FK PACKAGE
(TOP VIEW)

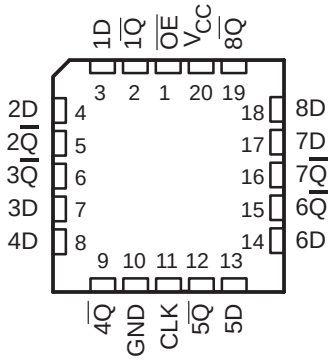

description

These octal D-type edge-triggered flip-flops feature 3-state outputs designed specifically for driving highly capacitive or relatively low-impedance loads. They are particularly suitable for implementing buffer registers, I/O ports, bidirectional bus drivers, and working registers.

On the positive transition of the clock (CLK) input, the $\overline{Q}$ outputs are set to the complement of the logic states set up at the data (D) inputs. The ’ALS534A and SN74AS534 have inverted outputs, but otherwise are functionally equivalent to the ’ALS374A and SN74AS374.

A buffered output-enable ($\overline{OE}$) input places the eight outputs in either a normal logic state (high or low logic levels) or a high-impedance state. In the high-impedance state, the outputs neither load nor drive the bus lines significantly. The high-impedance state and increased drive provide the capability to drive bus lines without interface or pullup components.

$\overline{OE}$ does not affect the internal operations of the flip-flops. Old data can be retained or new data can be entered while the outputs are off.

The SN54ALS534A is characterized for operation over the full military temperature range of –55°C to 125°C. The SN74ALS534A and SN74AS534 are characterized for operation from 0°C to 70°C.

FUNCTION TABLE
(each flip-flop)

INPUTS			OUTPUT
$\overline{OE}$	CLK	D	$\overline{Q}$
L	↑	H	L
L	↑	L	H
L	H or L	X	$\overline{Q}_0$
H	X	X	Z



Please be aware that an important notice concerning availability, standard warranty, and use in critical applications of Texas Instruments semiconductor products and disclaimers thereto appears at the end of this data sheet.

PRODUCTION DATA information is current as of publication date. Products conform to specifications per the terms of Texas Instruments standard warranty. Production processing does not necessarily include testing of all parameters.

Copyright © 1996, Texas Instruments Incorporated

logic symbol†

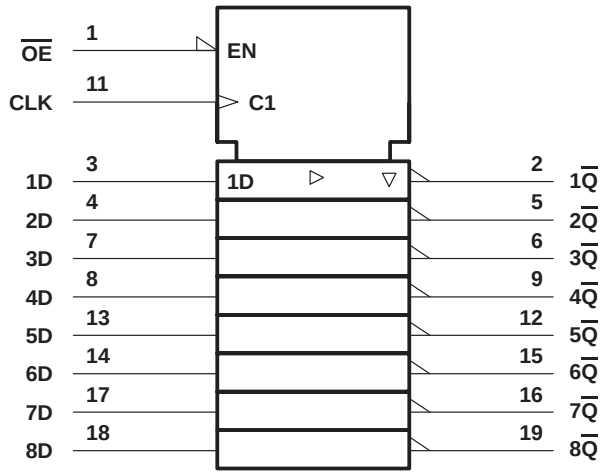

† This symbol is in accordance with ANSI/IEEE Std 91-1984 and IEC Publication 617-12.

logic diagram (positive logic)

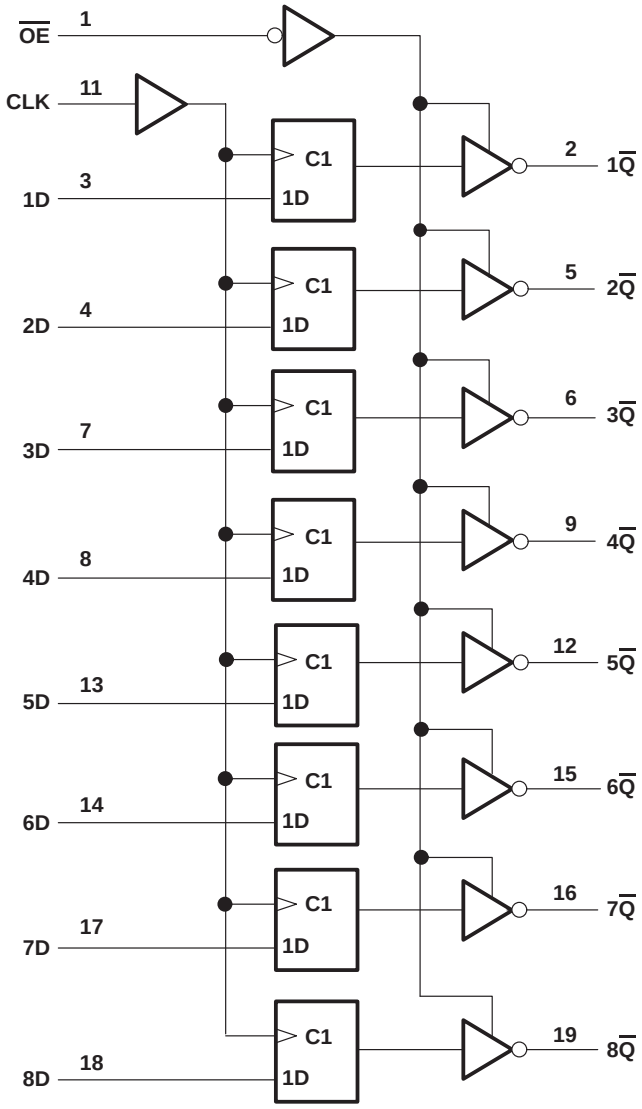

absolute maximum ratings over operating free-air temperature range (unless otherwise noted)†

Supply voltage, V_{CC} . . . . . 7 V
Input voltage, V_I . . . . . 7 V
Voltage applied to a disabled 3-state output . . . . . 5.5 V
Operating free-air temperature range, T_A: SN54ALS534A . . . . . –55°C to 125°C
SN74ALS534A . . . . . 0°C to 70°C
Storage temperature range, T_{stg} . . . . . –65°C to 150°C

† Stresses beyond those listed under "absolute maximum ratings" may cause permanent damage to the device. These are stress ratings only, and functional operation of the device at these or any other conditions beyond those indicated under "recommended operating conditions" is not implied. Exposure to absolute-maximum-rated conditions for extended periods may affect device reliability.

recommended operating conditions

		SN54ALS534A			SN74ALS534A			UNIT
		MIN	NOM	MAX	MIN	NOM	MAX	
V_{CC}	Supply voltage	4.5	5	5.5	4.5	5	5.5	V
V_{IH}	High-level input voltage	2			2			V
V_{IL}	Low-level input voltage			0.7			0.8	V
I_{OH}	High-level output current			–1			–2.6	mA
I_{OL}	Low-level output current			12			24	mA
f_{clock}	Clock frequency	0		30	0		35	MHz
t_w	Pulse duration, CLK high or low	16.5			14			ns
t_{su}	Setup time, data before CLK↑	10			10			ns
t_h	Hold time, data after CLK↑	0			0			ns
T_A	Operating free-air temperature	–55		125	0		70	°C

electrical characteristics over recommended operating free-air temperature range (unless otherwise noted)

PARAMETER		TEST CONDITIONS		SN54ALS534A			SN74ALS534A			UNIT
				MIN	TYP‡	MAX	MIN	TYP‡	MAX	
V_{IK}		V_{CC} = 4.5 V,	I_I = –18 mA			–1.5			–1.5	V
V_{OH}		V_{CC} = 4.5 V to 5.5 V,	I_{OH} = –0.4 mA	V_{CC} –2			V_{CC} –2			V
		V_{CC} = 4.5 V	I_{OH} = –1 mA	2.4	3.3					
			I_{OH} = –2.6 mA				2.4	3.2		
V_{OL}		V_{CC} = 4.5 V	I_{OL} = 12 mA		0.25	0.4		0.25	0.4	V
			I_{OL} = 24 mA					0.35	0.5	
I_{OZH}		V_{CC} = 5.5 V,	V_O = 2.7 V			20			20	µA
I_{OZL}		V_{CC} = 5.5 V,	V_O = 0.4 V			–20			–20	µA
I_I		V_{CC} = 5.5 V,	V_I = 7 V			0.1			0.1	mA
I_{IH}		V_{CC} = 5.5 V,	V_I = 2.7 V			20			20	µA
I_{IL}	CLK, $\overline{OE}$	V_{CC} = 5.5 V,	V_I = 0.4 V			–0.1			–0.1	mA
	D					–0.2			–0.2	
I_O§		V_{CC} = 5.5 V,	V_O = 2.25 V	–20		–112	–30		–112	mA
I_{CC}		V_{CC} = 5.5 V	Outputs high		11	19		11	19	mA
			Outputs low		19	28		19	28	
			Outputs disabled		10	31		20	31	

‡ All typical values are at V_{CC} = 5 V, T_A = 25°C.
§ The output conditions have been chosen to produce a current that closely approximates one half of the true short-circuit output current, I_{OS}.

switching characteristics (see Figure 1)

PARAMETER	FROM (INPUT)	TO (OUTPUT)	V_{CC} = 4.5 V to 5.5 V, C_L = 50 pF, R1 = 500 Ω, R2 = 500 Ω, T_A = MIN to MAX†				UNIT
			SN54ALS534A		SN74ALS534A		
			MIN	MAX	MIN	MAX	
f_{max}			30		35		MHz
t_{PLH}	CLK	Any $\overline{Q}$	3	17	3	12	ns
t_{PHL}			4	18	4	16	
t_{PZH}	$\overline{OE}$	Any $\overline{Q}$	3	19	3	17	ns
t_{PZL}			4	20	4	18	
t_{PHZ}	$\overline{OE}$	Any $\overline{Q}$	1	12	1	10	ns
t_{PLZ}			1	25	2	14	

† For conditions shown as MIN or MAX, use the appropriate value specified under recommended operating conditions.

absolute maximum ratings over operating free-air temperature range (unless otherwise noted)‡

Supply voltage, V_{CC} . . . . . 7 V
Input voltage, V_I . . . . . 7 V
Voltage applied to a disabled 3-state output . . . . . 5.5 V
Operating free-air temperature range, T_A: SN74AS534 . . . . . 0°C to 70°C
Storage temperature rang, T_{stg} . . . . . –65°C to 150°C

‡ Stresses beyond those listed under “absolute maximum ratings” may cause permanent damage to the device. These are stress ratings only, and functional operation of the device at these or any other conditions beyond those indicated under “recommended operating conditions” is not implied. Exposure to absolute-maximum-rated conditions for extended periods may affect device reliability.

recommended operating conditions

			SN74AS534			UNIT
			MIN	NOM	MAX	
V_{CC}	Supply voltage		4.5	5	5.5	V
V_{IH}	High-level input voltage		2			V
V_{IL}	Low-level input voltage				0.8	V
I_{OH}	High-level output current				–15	mA
I_{OL}	Low-level output current				48	mA
f_{clock}	Clock frequency		0		125	MHz
t_w	Pulse duration	CLK high	4			ns
		CLK low	3			
t_{su}	Setup time, data before CLK↑		2			ns
t_h	Hold time, data after CLK↑		2			ns
T_A	Operating free-air temperature		0		70	°C

electrical characteristics over recommended operating free-air temperature range (unless otherwise noted)

PARAMETER		TEST CONDITIONS		SN74AS534			UNIT
				MIN	TYP†	MAX	
V_{IK}		V_{CC} = 4.5 V,	I_I = –18 mA			–1.2	V
V_{OH}		V_{CC} = 4.5 V to 5.5 V,	I_{OH} = –2 mA	V_{CC} –2			V
		V_{CC} = 4.5 V,	I_{OH} = –15 mA	2.4	3.3		
V_{OL}		V_{CC} = 4.5 V,	I_{OL} = 48 mA		0.34	0.5	V
I_{OZH}		V_{CC} = 5.5 V,	V_O = 2.7 V			50	µA
I_{OZL}		V_{CC} = 5.5 V,	V_I = 0.4 V			–50	µA
I_I		V_{CC} = 5.5 V,	V_I = 7 V			0.1	mA
I_{IH}		V_{CC} = 5.5 V,	V_I = 2.7 V			20	µA
I_{IL}	$\overline{OE}$, CLK	V_{CC} = 5.5 V,	V_I = 0.4 V			–0.5	mA
	D					–2	
I_O‡		V_{CC} = 5.5 V,	V_O = 2.25 V	–30		–112	mA
I_{CC}		V_{CC} = 5.5 V	Outputs high		77	120	mA
			Outputs low		84	128	
			Outputs disabled		84	128	

† All typical values are at V_{CC} = 5 V, T_A = 25°C.
‡ The output conditions have been chosen to produce a current that closely approximates one half of the true short-circuit output current, I_{OS}.

switching characteristics (see Figure 1)

PARAMETER	FROM (INPUT)	TO (OUTPUT)	V_{CC} = 4.5 V to 5.5 V, C_L = 50 pF, R1 = 500 Ω, R2 = 500 Ω, T_A = MIN to MAX§		UNIT
			SN74AS534		
			MIN	MAX	
f_{max}			125		MHz
t_{PLH}	CLK	Any $\overline{Q}$	3	8	ns
t_{PHL}			4	9	
t_{PZH}	$\overline{OE}$	Any $\overline{Q}$	2	6	ns
t_{PZL}			3	10	
t_{PHZ}	$\overline{OE}$	Any $\overline{Q}$	2	6	ns
t_{PLZ}			2	6	

§ For conditions shown as MIN or MAX, use the appropriate value specified under recommended operating conditions.

PARAMETER MEASUREMENT INFORMATION
SERIES 54ALS/74ALS AND 54AS/74AS DEVICES

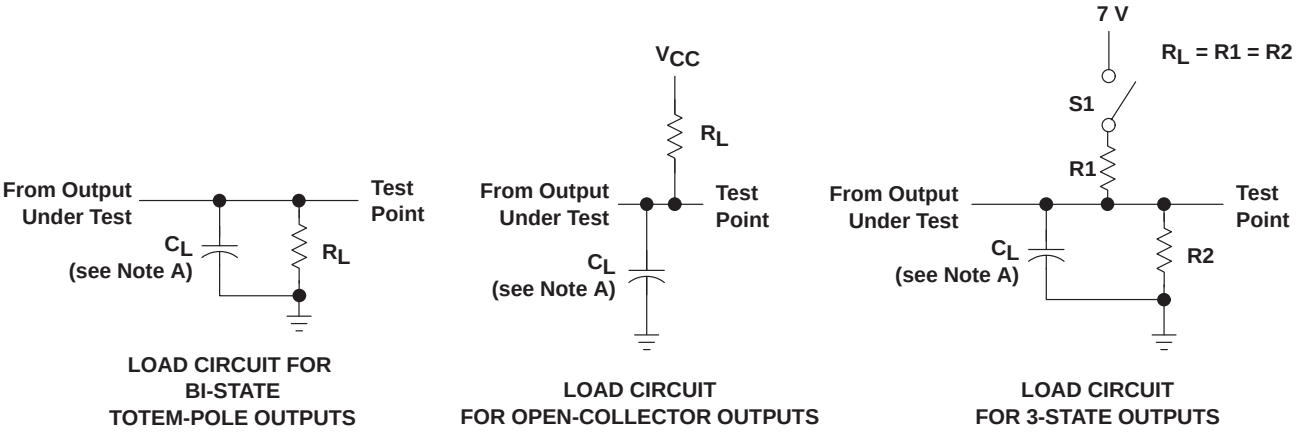

LOAD CIRCUIT FOR BI-STATE TOTEM-POLE OUTPUTS

LOAD CIRCUIT FOR OPEN-COLLECTOR OUTPUTS

LOAD CIRCUIT FOR 3-STATE OUTPUTS

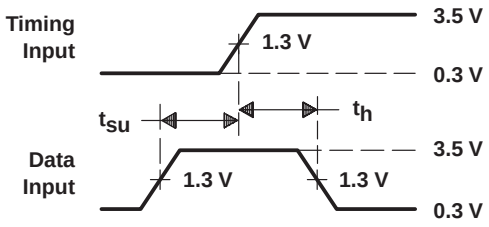

VOLTAGE WAVEFORMS
SETUP AND HOLD TIMES

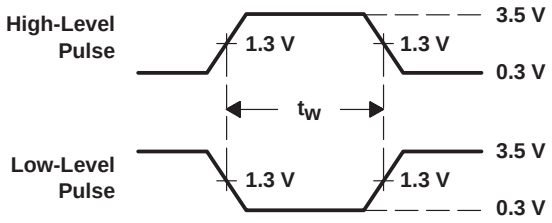

VOLTAGE WAVEFORMS
PULSE DURATIONS

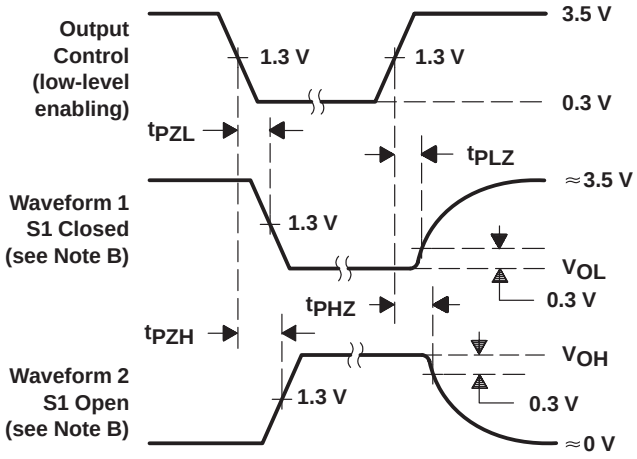

VOLTAGE WAVEFORMS
ENABLE AND DISABLE TIMES, 3-STATE OUTPUTS

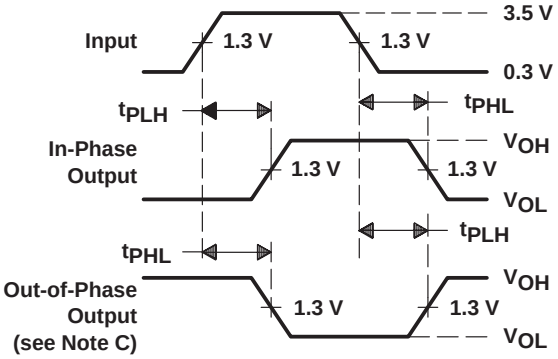

VOLTAGE WAVEFORMS
PROPAGATION DELAY TIMES

NOTES: A. C_L includes probe and jig capacitance.
B. Waveform 1 is for an output with internal conditions such that the output is low except when disabled by the output control. Waveform 2 is for an output with internal conditions such that the output is high except when disabled by the output control.
C. When measuring propagation delay items of 3-state outputs, switch S1 is open.
D. All input pulses have the following characteristics: PRR ≤ 1 MHz, $t_r = t_f = 2$ ns, duty cycle = 50%.
E. The outputs are measured one at a time with one transition per measurement.

Figure 1. Load Circuits and Voltage Waveforms

IMPORTANT NOTICE

Texas Instruments and its subsidiaries (TI) reserve the right to make changes to their products or to discontinue any product or service without notice, and advise customers to obtain the latest version of relevant information to verify, before placing orders, that information being relied on is current and complete. All products are sold subject to the terms and conditions of sale supplied at the time of order acknowledgement, including those pertaining to warranty, patent infringement, and limitation of liability.

TI warrants performance of its semiconductor products to the specifications applicable at the time of sale in accordance with TI's standard warranty. Testing and other quality control techniques are utilized to the extent TI deems necessary to support this warranty. Specific testing of all parameters of each device is not necessarily performed, except those mandated by government requirements.

CERTAIN APPLICATIONS USING SEMICONDUCTOR PRODUCTS MAY INVOLVE POTENTIAL RISKS OF DEATH, PERSONAL INJURY, OR SEVERE PROPERTY OR ENVIRONMENTAL DAMAGE ("CRITICAL APPLICATIONS"). TI SEMICONDUCTOR PRODUCTS ARE NOT DESIGNED, AUTHORIZED, OR WARRANTED TO BE SUITABLE FOR USE IN LIFE-SUPPORT DEVICES OR SYSTEMS OR OTHER CRITICAL APPLICATIONS. INCLUSION OF TI PRODUCTS IN SUCH APPLICATIONS IS UNDERSTOOD TO BE FULLY AT THE CUSTOMER'S RISK.

In order to minimize risks associated with the customer's applications, adequate design and operating safeguards must be provided by the customer to minimize inherent or procedural hazards.

TI assumes no liability for applications assistance or customer product design. TI does not warrant or represent that any license, either express or implied, is granted under any patent right, copyright, mask work right, or other intellectual property right of TI covering or relating to any combination, machine, or process in which such semiconductor products or services might be or are used. TI's publication of information regarding any third party's products or services does not constitute TI's approval, warranty or endorsement thereof.

Copyright © 1998, Texas Instruments Incorporated