SMTD-200

Thyristor-Diode Module

Type	V_{RSM}	V_{RRM} , V_{DRM}
SMTD-200-08	900	800
SMTD-200-12	1300	1200
SMTD-200-14	1500	1400
SMTD-200-16	1700	1600
SMTD-200-18	1900	1800

Type	I_{TAVM}, I_{FAVM}	I_{TRMS}, I_{FRMS}	T_C	I_{TSM}, I_{FSM}	(di/dt)cr	(dv/dt)cr	V_{TM}	I_{TM}, I_{FM}	V_{TO}	r_T	t_q	V_{GT}	I_{GT}	T_{VJM}	V_{isol}	R_{thJC}
	A	A	°C	kA	A/µs	V/µs	V	A	V	mΩ	µs	V	mA	°C	V	K/W
SMTD-200	200	340	85	6.5	150	500	1.6	600	0.85	1.1	150	2.0	100	125	2500	0.125

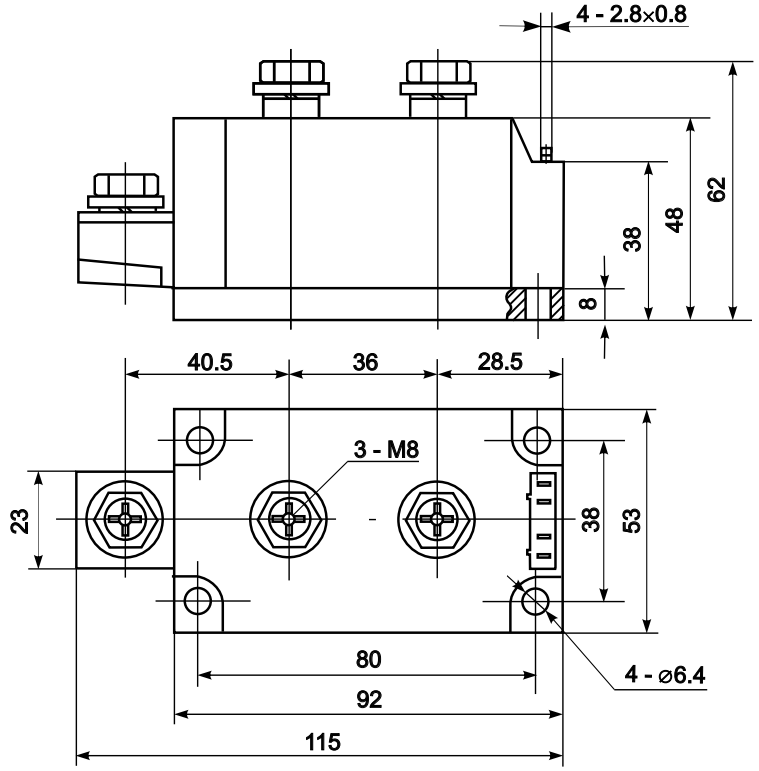

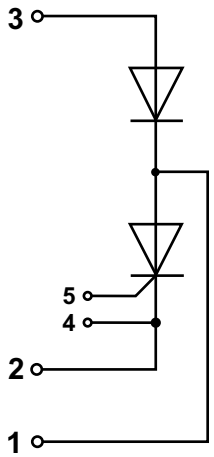

Features:

- Industrial standard package
- Heat tranasfer through aluminium nitride ceramic isolated metal baseplate
- Precise internal pressure contacts for high reability
- 2500V RMS isolation voltage

Typical Applications:

- DC motor control
- AC motor soft starter
- Temperature control (e.g. for ovens, chemical processes)
- Lighting control