SMTC2-1500

Phase Control Thyristor

Type	V_{RSM}	V_{RRM} , V_{DRM}
SMTC2-1500-16	1700	1600
SMTC2-1500-18	1900	1800
SMTC2-1500-20	2100	2000
SMTC2-1500-22	2300	2200

Type	I_{TAVM} T_C=55 °C	I_{TRMS}	I_{TSM}	(di/dt)cr	(dv/dt)cr	V_{TM}	I_{TM}	V_{TO}	r_T	t_q	V_{GT}	I_{GT}	T_{VJM}	R_{thJC}	F
	A	kA	kA	A/μs	V/μs	V	kA	V	mΩ	μs	V	mA	°C	K/W	kN
SMTC2-1500	1500	2.72	19	200	1000	2.1	3.5	1.10	0.25	400	2.5	250	125	0.017	34

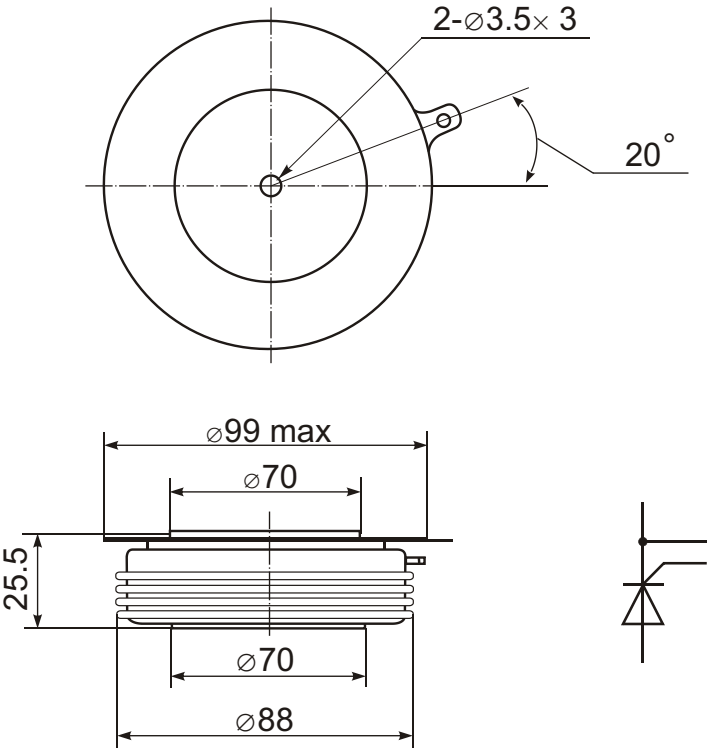

Features:

- Hermetic metal case with ceramic insulator
- Capsule packages for double sided cooling
- International standard case
- Amplifying gates

Typical Applications:

- DC motor control
- AC motor soft starter
- Controlled rectifiers
- AC controllers