SMP600G-EN

MECHANICAL DATA
Dimensions in mm.

P.I.N. PHOTODIODE

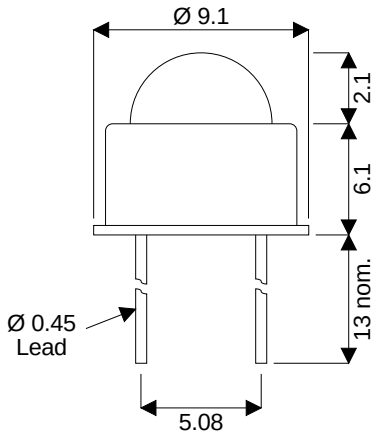

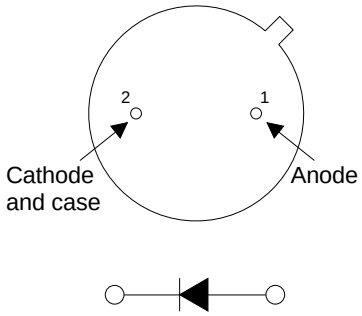

TO-39 Package

Pin 1 – Anode Pin 2 – Cathode & Case

FEATURES

- **HIGH SENSITIVITY**
- **WIDE RECEIVING ANGLES**
- **EXCELLENT LINEARITY**
- **LOW NOISE**
- **WIDE SPECTRAL RESPONSE**
- **WIDE INTRINSIC BANDWIDTH**
- **INTEGRAL OPTICAL FILTER OPTION note 1**
- **TO39 HERMETIC METAL CAN PACKAGE**
- **.EMI SCREENING MESH AVAILABLE**

Note 1 Contact Semelab Plc for filter options

DESCRIPTION

The SMP600G-EN is a Silicon P.I.N. photodiode incorporated in a lensed, hermetic metal can package. The electrical terminations are via two leads of diameter 0.018" on a pitch of 0.2". The cathode of the photodiode is electrically connected to the package.

The larger photodiode active area provides greater sensitivity than the SMP550 range of devices, with a slight reduction in speed. Inherent in the device geometry is a wide receiving angle. The photodiode structure has been optimised for high sensitivity, light measurement applications. The narrow viewing angles provide better coupling to on-axis illumination sources. The metal can and optional screening mesh ensure a rugged device with a high degree of immunity to radiated electrical interference.

ABSOLUTE MAXIMUM RATINGS (T_{case} = 25°C unless otherwise stated)

Operating temperature range	-40°C to +70°C
Storage temperature range	-45°C to +80°C
Temperature coefficient of responsively	0.35% per °C
Temperature coefficient of dark current	x2 per 8°C rise
Reverse breakdown voltage	60V

Semelab plc. Telephone (01455) 556565. Telex: 341927. Fax (01455) 552612.

SMP600G-EN

CHARACTERISTICS (T_{amb}=25°C unless otherwise stated)

Characteristic	Test Conditions.	Min.	Typ.	Max.	Units
Responsively	λ at 900nm	0.45	0.55		A/W
Active Area			15		mm^2
Dark Current	E = 0 Dark 1V Reverse		2	6	nA
	E = 0 Dark 10V Reverse				
Breakdown Voltage	E = 0 Dark 10µA Reverse	60	80		V
Capacitance	E = 0 Dark 0V Reverse		90		pF
	E = 0 Dark 20V Reverse		25		
Rise Time	30V Reverse 50Ω		12		ns
NEP	900nm		$20x10^{-14}$	0.45	W/√Hz

