DATA SHEET

SMP1302 Series: Switch and Attenuator Plastic Packaged PIN Diodes

Applications

- TV distribution and cellular base stations
- High volume switch and attenuators

Features

- Designed for base station and handset applications
- Low-distortion design
- Available in tape and reel packaging
- Packages rated MSL1 @ 260 °C per JEDEC J-STD-020



Skyworks Green™ products are compliant with all applicable legislation and are halogen-free. For additional information, refer to *Skyworks Definition of Green™*, document number SQ04-0074.

Description

The SMP1302 series of plastic packaged, surface mountable, low capacitance (0.3 pF) silicon PIN diodes is designed for high-volume switch and attenuator applications from 10 MHz to beyond 10 GHz.

These diodes are designed for use in low-distortion PI and TEE attenuators with low drive current (maximum resistance at 1 mA is 10 Ω) commonly used in TV distribution and cellular base station applications. The nominal 50 µm I region width, combined with a maximum resistance of 3 Ω at 10 mA, makes these diodes useful in large signal switch applications.

The SMP1302 series provides single, dual, and quad diodes in a selection of plastic packages including SOT-23, SOD-323, SC-79, an ultralow inductance (0.2 nH) SOT-143 (SMP1302-017), SC-70, SC-88, and a small footprint SOD-882.

A four-diode array is available in an SOT-5 package (SMP1302-027) designed for insertion in the commonly used four-diode PI attenuator circuits.

Table 1 describes the various packages and marking of the SMP1302 series.

Table 1. SMP1302 Series Packaging and Marking

										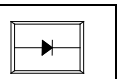
Single	Common Anode	Common Cathode	Series Pair	Reverse Series Pair	Single	Ultralow Inductance	PI	Single	Quad Common Cathode	Single
SOT-23	SOT-23	SOT-23	SOT-23	SOT-23	SOD-323 Green™	SOT-143	SOT-5	SC-79 Green™	SC-88	SOD-882 Green™
SMP1302-001 Marking: PF1	**SMP1302-003** Marking: PF9	**SMP1302-004** Marking: PF3	**SMP1302-005** Marking: PFS			**SMP1302-017** Marking: PFF	**SMP1302-027** Marking: PFM		**SMP1302-078LF** Marking: IXI	**SMP1302-040LF** Marking: W
SMP1302-001LF Green™ Marking: RF1	**SMP1302-003LF** Green™ Marking:RF9	**SMP1302-004LF** Green™ Marking: RF3	**SMP1302-005LF** Green™ Marking: RF2	**SMP1302-006LF** Green™ Marking: RF8	**SMP1302-011LF** Marking: RF	**SMP1302-017LF** Marking: RFF	**SMP1302-027LF** Green™ Marking: RFM	**♦SMP1302-079LF**		
L_S = 1.5 nH	L_S = 1.5 nH	L_S = 1.5 nH	L_S = 1.5 nH	L_S = 1.5 nH	L_S = 1.5 nH	L_S = 0.2 nH		L_S = 0.7 nH	L_S = 1.4 nH	L_S = 0.45 nH
		SC-70	SC-70							
		SMP1302-074 Marking: PF3								
		SMP1302-074LF Green™ Marking: RF3	**SMP1302-075LF** Green™ Marking: RF2							
		L_S = 1.4 nH	L_S = 1.4 nH							

The Pb-free symbol or "LF" in the part number denotes a lead-free, RoHS-compliant package unless otherwise noted as Green™. Tin/lead (Sn/Pb) packaging is not recommended for new designs.

Innovation to Go™
Select Linear Products (indicated by ♦) now available for purchase online.

SMP1302-017: Low Inductance PIN Diode in SOT-143 Package

The SMP1302-017 uses the SMP1302 PIN diode in a customized SOT-143 plastic package designed for high performance in high-frequency applications. Its effective inductance, based on the 3 GHz isolation, is <0.2 nH. The SOT-143 package is diagrammed in Figure 1.

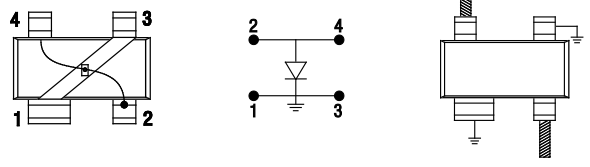

Lead Configuration **Schematic** **Switch Connection**

Figure 1. SOT-143 Package

SMP1302-078LF Pinout

Table 2 provides the signal pin assignments for the 6-pin SC-88 quad common cathode package.

Electrical and Mechanical Specifications

The absolute maximum ratings of the SMP1302 series are provided in Table 3. Electrical specifications are provided in Table 4. Resistance versus temperature measurements are provided in Table 5.

Typical performance characteristics of the SMP1302 series are illustrated in Figures 2 to 5. Package dimensions are shown in Figures 6 to 20 (even numbers), and tape and reel dimensions are provided in Figures 7 to 21 (odd numbers).

Table 2. SMP1302-078LF Pin Signals

Pin #	Name	Pin #	Name
1	Anode 1	4	Anode 3
2	Common cathode	5	Common cathode
3	Anode 2	6	Anode 4

Table 3. SMP1302 Series Absolute Maximum Ratings

Parameter	Symbol	Minimum	Maximum	Units
Reverse voltage	V_R		200	V
Power dissipation @ 25 °C lead temperature	P_D		250	mW
Storage temperature	T_{STG}	–65	+150	°C
Operating temperature	T_A	–65	+150	°C

Note: Exposure to maximum rating conditions for extended periods may reduce device reliability. There is no damage to device with only one parameter set at the limit and all other parameters set at or below their nominal value. Exceeding any of the limits listed here may result in permanent damage to the device.

***CAUTION**: Although this device is designed to be as robust as possible, Electrostatic Discharge (ESD) can damage this device. This device must be protected at all times from ESD. Static charges may easily produce potentials of several kilovolts on the human body or equipment, which can discharge without detection. Industry-standard ESD precautions should be used at all times. The SMP1302 series PIN diodes are Class 1C ESD devices.*

Table 4. SMP1302 Series Electrical Specifications (Note 1)
(T_A = +25 °C, Unless Otherwise Noted)

Parameter	Symbol	Test Condition	Min	Typical	Max	Units
Reverse current	I_R	V_R = 200 V			10	µA
Capacitance (Note 2)	C_T	f = 1 MHz, V = 30 V			0.3	pF
Resistance	R_S	f = 100 MHz I = 1 mA I = 10 mA I = 100 mA		 15	 20 3 1.5	 Ω Ω Ω
Forward voltage	V_F	I_F = 10 mA		0.8		V
Carrier lifetime	TI	I_F = 10 mA		0.7		µs
I region width				50		µm

Note 1: Performance is guaranteed only under the conditions listed in this Table.

Note 2: The SMP1302-017 and SMP1302-027 maximum capacitance is 0.45 pF.

Package and Handling Information

Instructions on the shipping container label regarding exposure to moisture after the container seal is broken must be followed. Otherwise, problems related to moisture absorption may occur when the part is subjected to high temperature during solder assembly.

The SMP1302 series is rated to Moisture Sensitivity Level 1 (MSL1) at 260 °C. It can be used for lead or lead-free soldering. For additional information, refer to the Skyworks Application Note, *Solder Reflow Information*, document number 200164.

Care must be taken when attaching this product, whether it is done manually or in a production solder reflow environment. Production quantities of this product are shipped in a standard tape and reel format.

Table 5. Resistance vs Temperature @ 100 MHz

I_F (mA)	R_S @ –55 °C (Ω)	R_S @ –15 °C (Ω)	R_S @ +25 °C (Ω)	R_S @ +65 °C (Ω)	R_S @ +100 °C (Ω)
0.02	599	653	692	715	722
0.10	123	135	143	154	161
0.3	42.2	46.6	49.7	54.3	56.8
1.0	13.5	15.0	16.2	17.9	18.8
10	2.0	2.3	2.6	2.9	3.0
20	1.34	1.50	1.70	2.00	2.00
100	0.60	0.74	1.00	1.10	1.10

Typical Performance Characteristics

(TA = +25 °C, Unless Otherwise Noted)

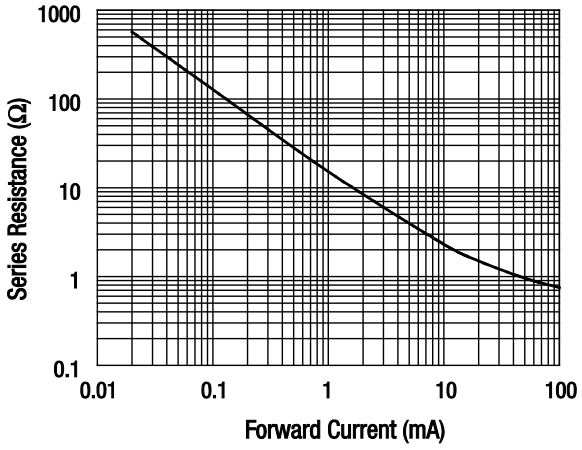

Figure 2. Series Resistance vs Current @ 100 MHz

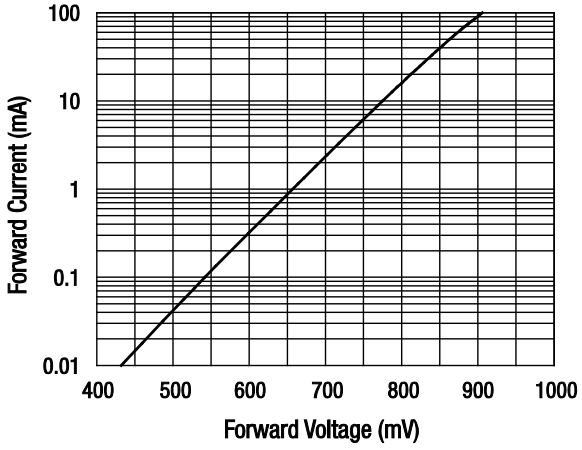

Figure 3. DC Characteristic

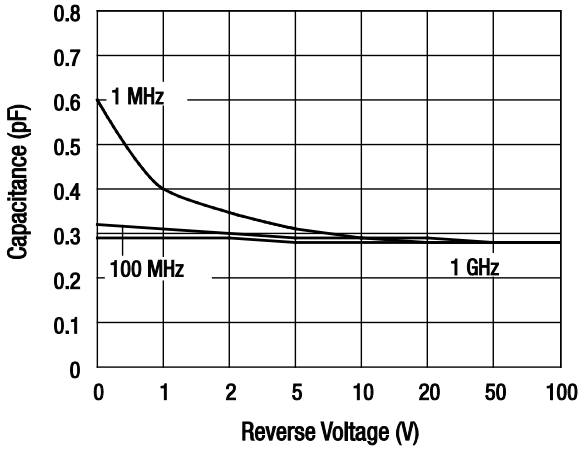

Figure 4. Capacitance vs Reverse Voltage

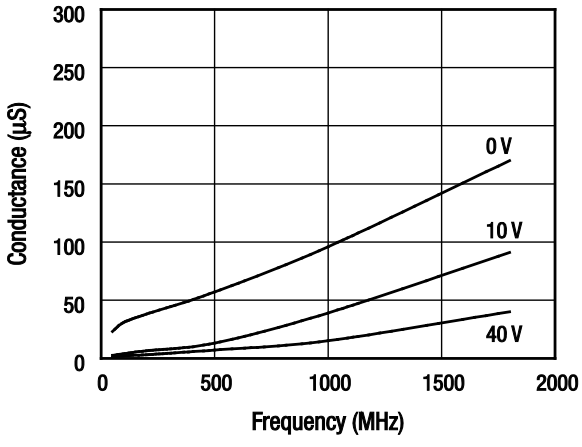

Figure 5. Conductance vs Frequency and Reverse Voltage

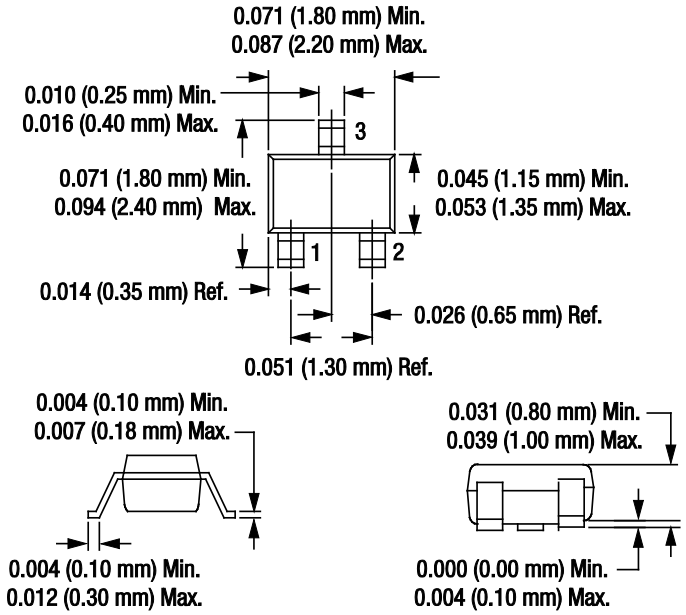

Figure 6. SC-70 Package Dimension Drawing

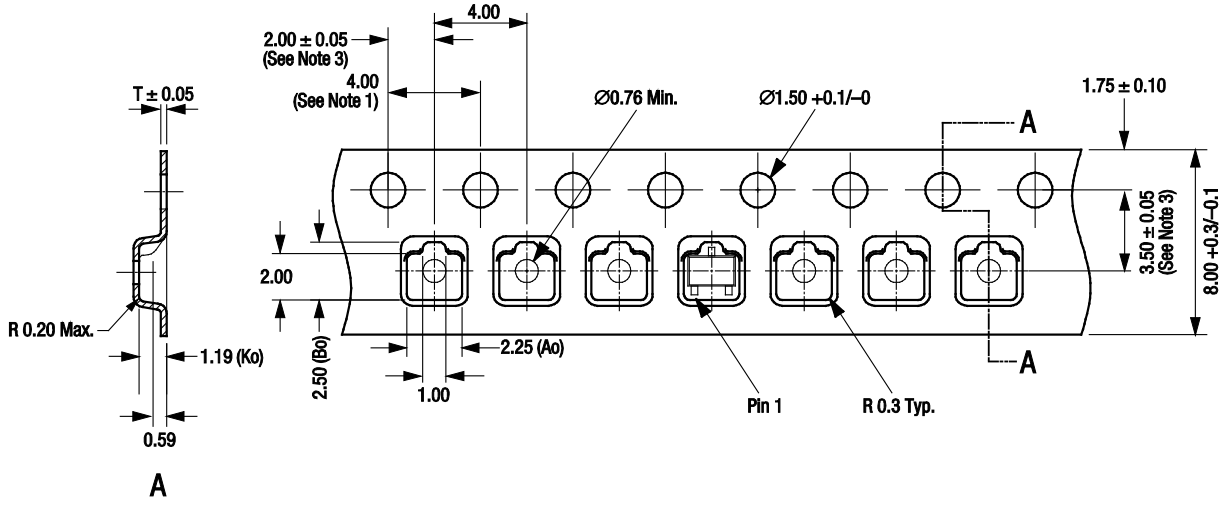

Notes:
1. *Sprocket hole pitch cumulative tolerance ±0.2.*
2. *Carrier tape: black conductive polystyrene.*
3. *Pocket position relative to sprocket hole measured as true position of pocket, not pocket hole.*
4. *Cover tape material: transparent conductive PSA with 9.2 mm width.*
5. *All measurements are in millimeters.*

S1685c

Figure 7. SC-70 Tape and Reel Dimensions

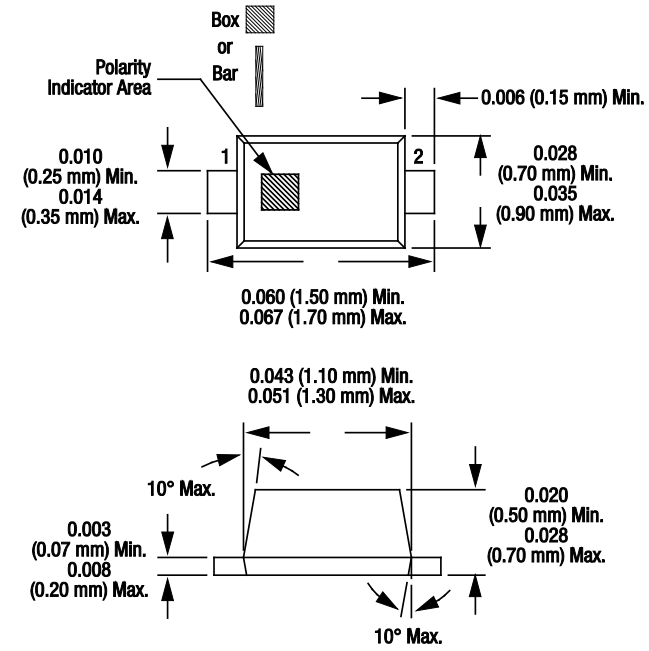

Figure 8. SC-79 Package Dimension Drawing

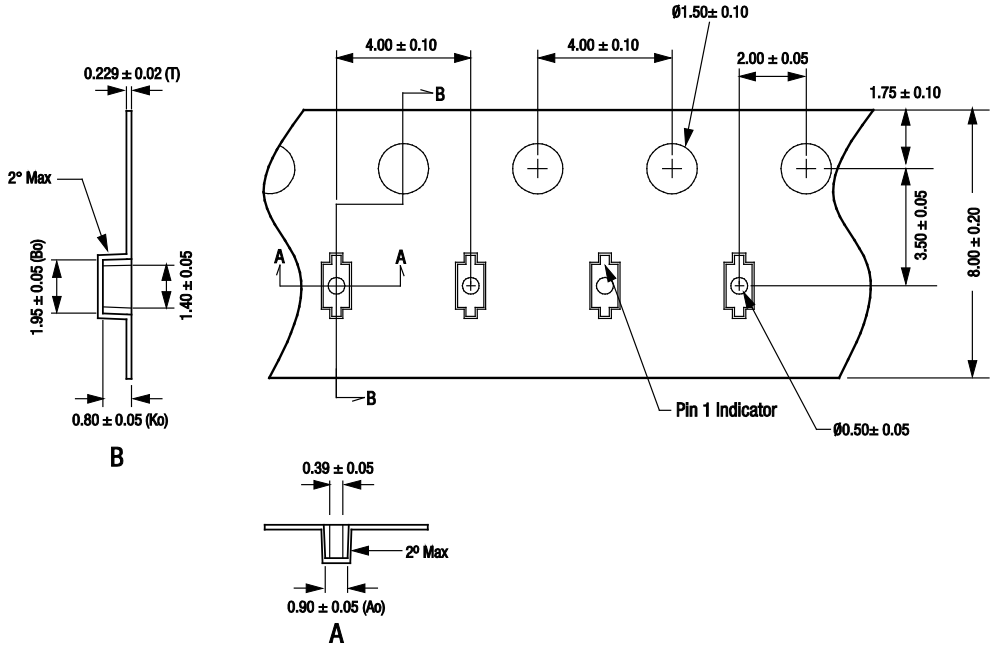

Notes:
1. *Carrier tape: black conductive polycarbonate or polystyrene.*
2. *Cover tape material: transparent conductive PSA.*
3. *Cover tape size: 5.4 mm width.*
4. *ESD-surface resistivity is ≤1 x 10^8 Ohms/square per EIA, JEDEC TNR Specification.*
4. *All measurements are in millimeters.*

S2929

Figure 9. SC-79 Tape and Reel Dimensions

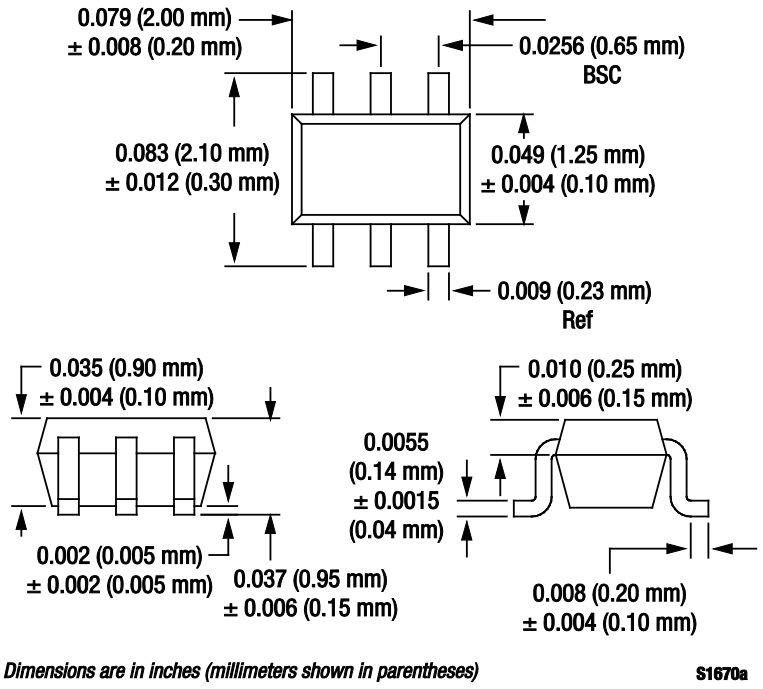

Figure 10. SC-88 Package Dimension Drawing

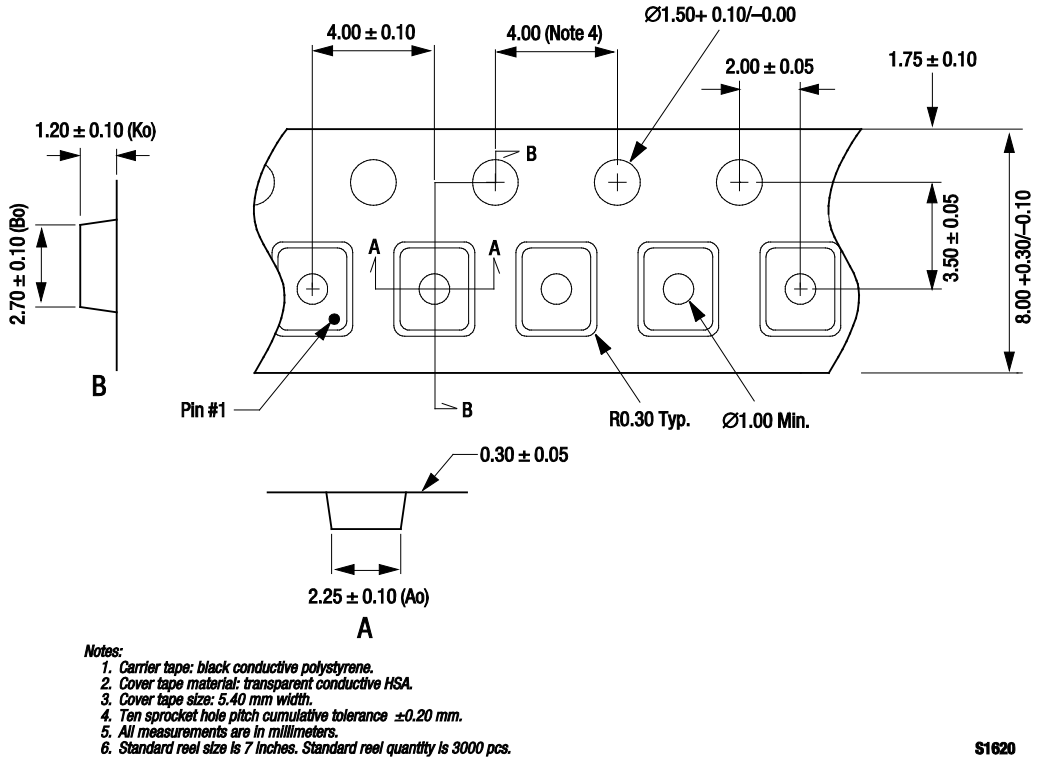

Figure 11. SC-88 Tape and Reel Dimensions

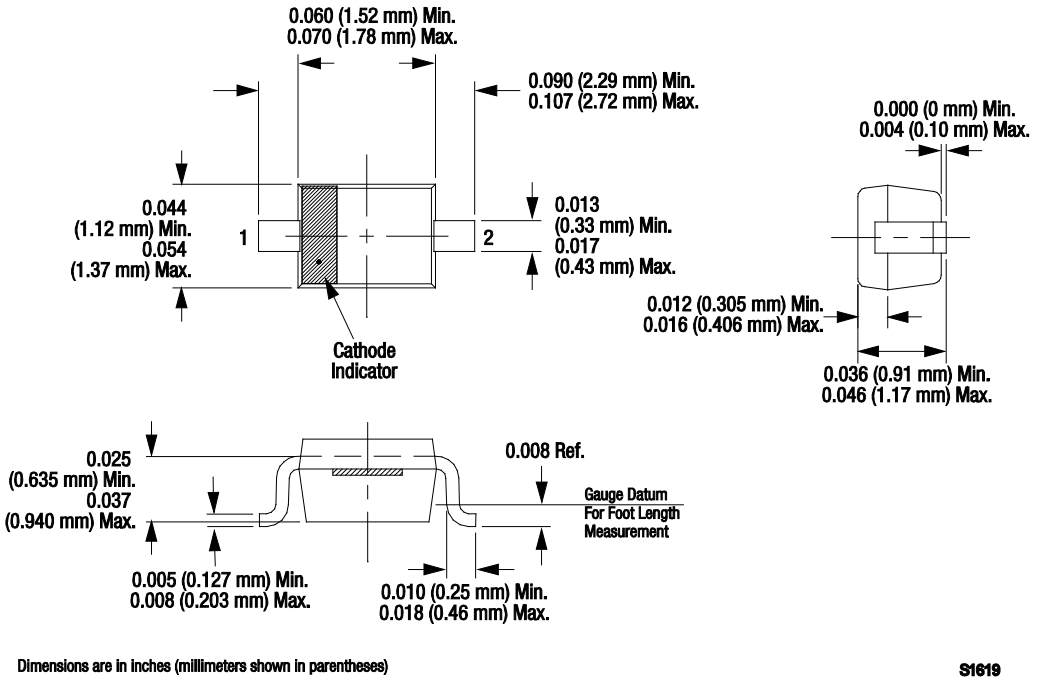

Figure 12. SOD-323 Package Dimension Drawing

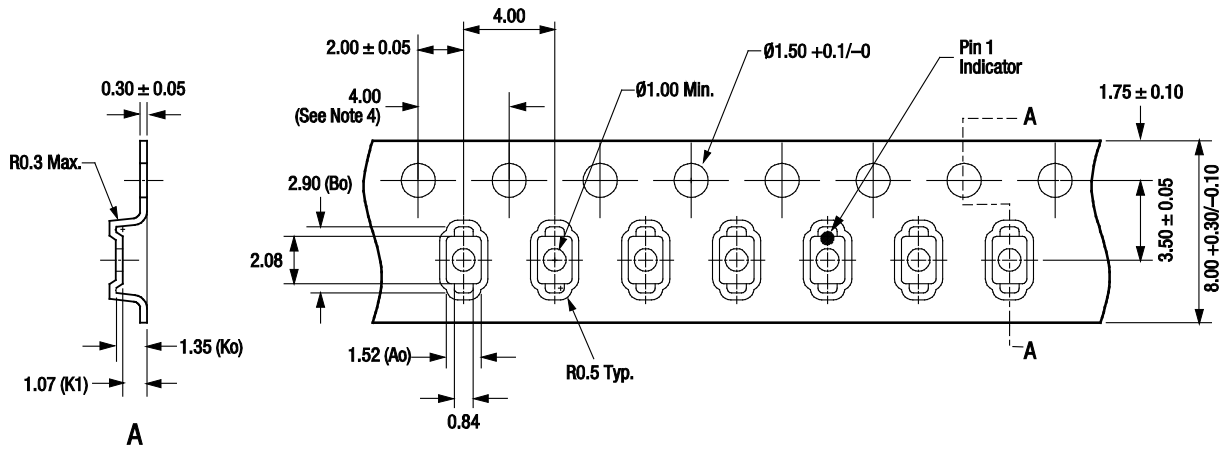

Notes:
1. *Carrier tape: black conductive polystyrene.*
2. *Cover tape: transparent conductive PSA.*
3. *Cover tape size: 5.4 mm width.*
4. *10 sprocket hole pitch cumulative tolerance: ±0.20 mm.*
5. *All measurements are in millimeters.*

S2910

Figure 13. SOD-323 Tape and Reel Dimensions

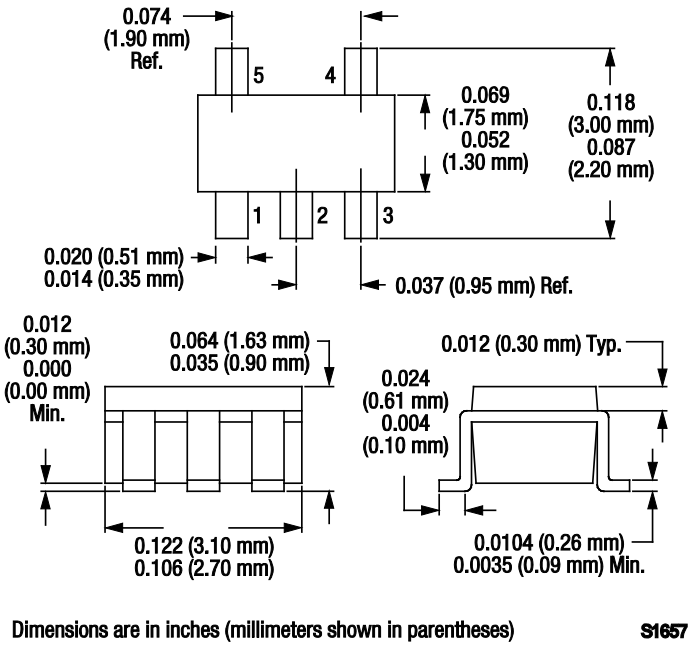

Figure 14. SOT-5 Package Dimension Drawing

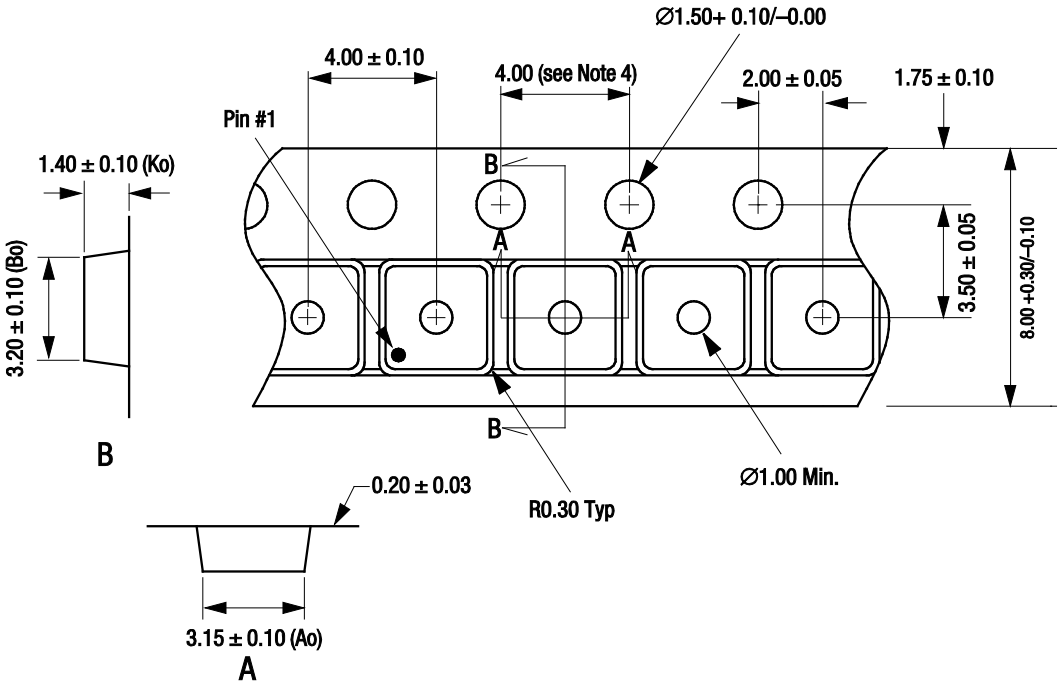

Notes:
1. *Carrier tape: black conductive polystyrene.*
2. *Cover tape material: transparent conductive HSA.*
3. *Cover tape size: 5.40 mm width.*
4. *Ten sprocket hole pitch cumulative tolerance = ±0.20 mm.*
5. *All measurements are in millimeters.*
6. *Standard reel size is 7 inches. Standard reel quantity is 3000 pcs.*

S1681

Figure 15. SOT-5 Tape and Reel Dimensions

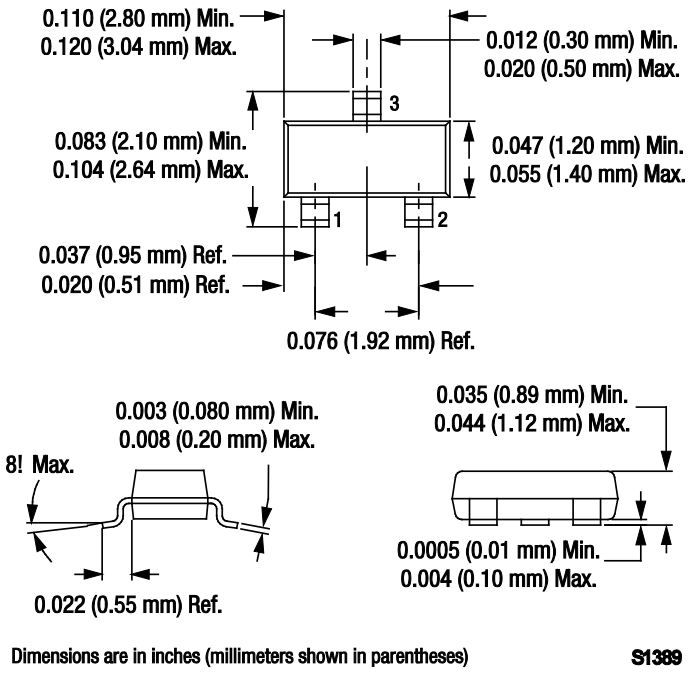

Figure 16. SOT-23 Package Dimension Drawing

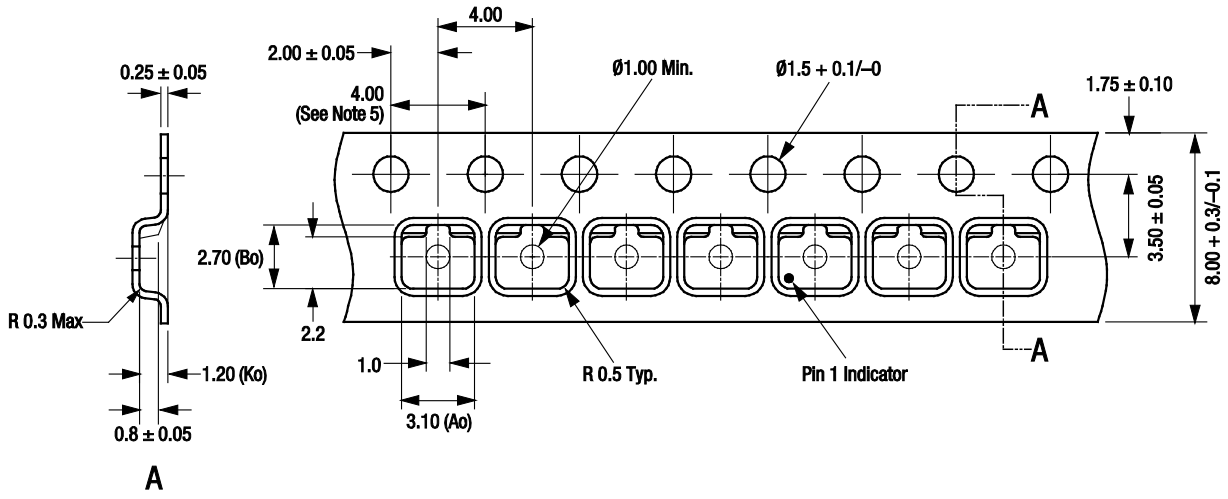

Notes:
1. *Carrier tape: black conductive polycarbonate.*
2. *Cover tape material: transparent conductive PSA.*
3. *Cover tape size: 5.40 mm width.*
4. *Tolerance ±0.10 mm.*
5. *Ten sprocket hole pitch cumulative tolerance: ±0.2 mm.*
6. *All measurements are in millimeters.*

S1684b

Figure 17. SOT-23 Tape and Reel Dimensions

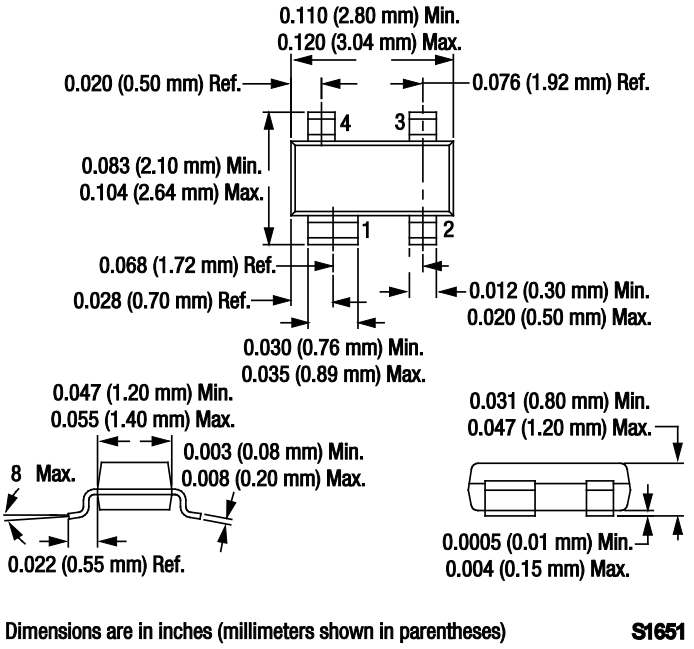

Figure 18. SOT-143 Package Dimension Drawing

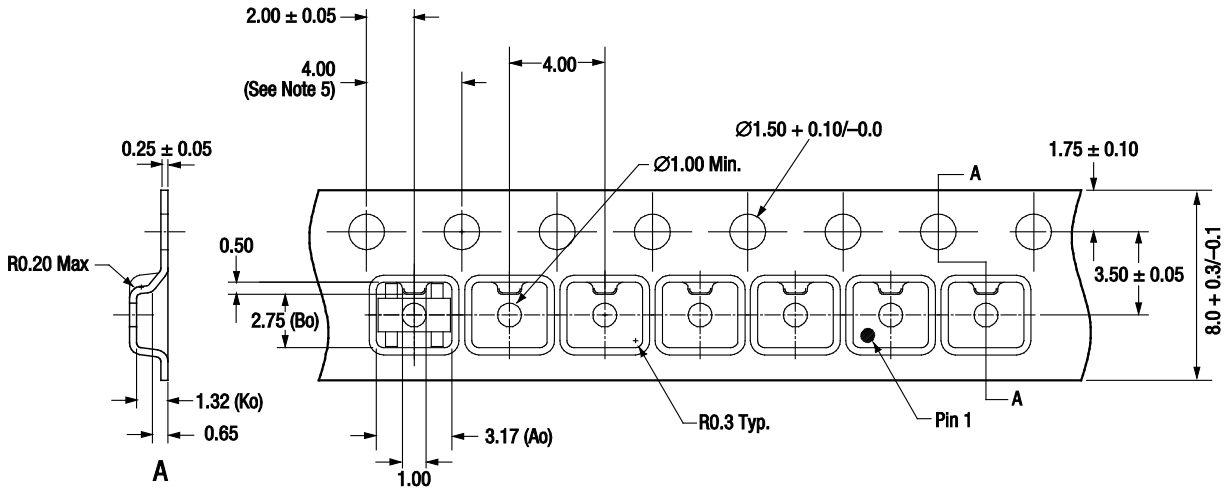

Notes:
1. *Carrier tape: black conductive polycarbonate.*
2. *Cover tape material: transparent conductive PSA.*
3. *Cover tape size: 5.4 mm width.*
4. *Tolerance: .XX = ±0.10*
5. *Ten sprocket hole pitch cumulative tolerance: ±0.2 mm.*
6. *All measurements are in millimeters.*

S2515a

Figure 19. SOT-143 Tape and Reel Dimensions

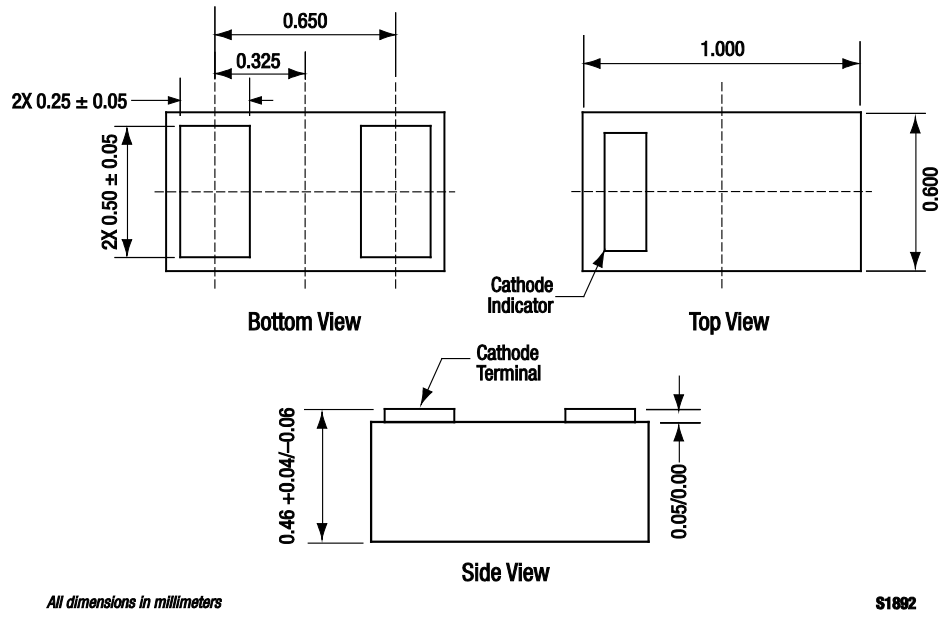

Figure 20. SOD-882 Package Dimension Drawing

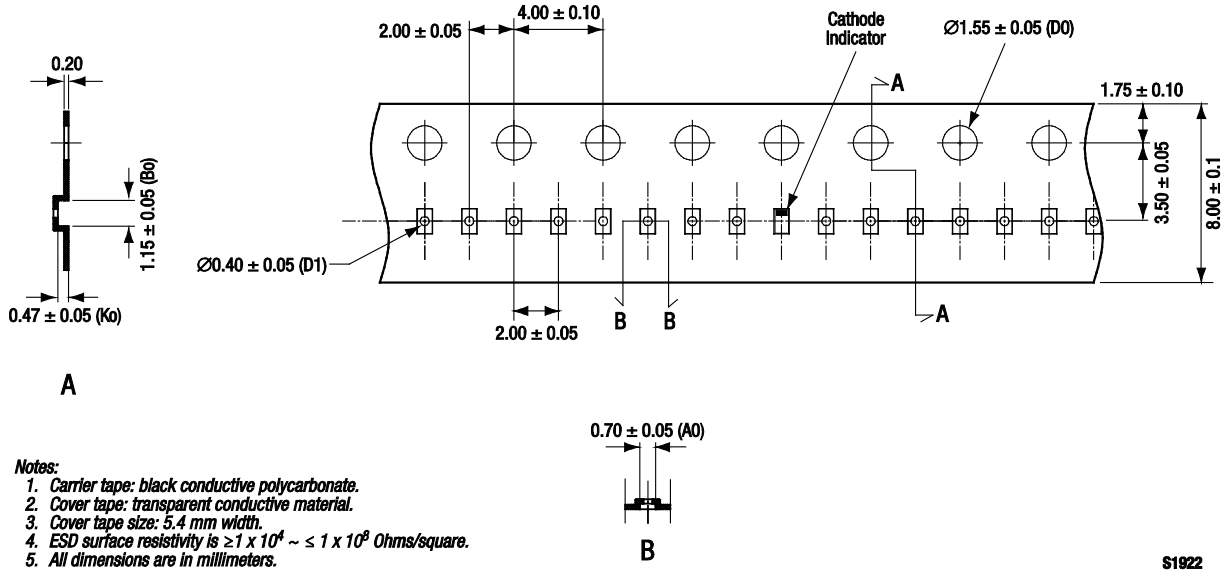

Figure 21. SOD-882 Tape and Reel Dimensions

Copyright © 2002-2011, 2012 Skyworks Solutions, Inc. All Rights Reserved.

Information in this document is provided in connection with Skyworks Solutions, Inc. (“Skyworks”) products or services. These materials, including the information contained herein, are provided by Skyworks as a service to its customers and may be used for informational purposes only by the customer. Skyworks assumes no responsibility for errors or omissions in these materials or the information contained herein. Skyworks may change its documentation, products, services, specifications or product descriptions at any time, without notice. Skyworks makes no commitment to update the materials or information and shall have no responsibility whatsoever for conflicts, incompatibilities, or other difficulties arising from any future changes.

No license, whether express, implied, by estoppel or otherwise, is granted to any intellectual property rights by this document. Skyworks assumes no liability for any materials, products or information provided hereunder, including the sale, distribution, reproduction or use of Skyworks products, information or materials, except as may be provided in Skyworks Terms and Conditions of Sale.

THE MATERIALS, PRODUCTS AND INFORMATION ARE PROVIDED “AS IS” WITHOUT WARRANTY OF ANY KIND, WHETHER EXPRESS, IMPLIED, STATUTORY, OR OTHERWISE, INCLUDING FITNESS FOR A PARTICULAR PURPOSE OR USE, MERCHANTABILITY, PERFORMANCE, QUALITY OR NON-INFRINGEMENT OF ANY INTELLECTUAL PROPERTY RIGHT; ALL SUCH WARRANTIES ARE HEREBY EXPRESSLY DISCLAIMED. SKYWORKS DOES NOT WARRANT THE ACCURACY OR COMPLETENESS OF THE INFORMATION, TEXT, GRAPHICS OR OTHER ITEMS CONTAINED WITHIN THESE MATERIALS. SKYWORKS SHALL NOT BE LIABLE FOR ANY DAMAGES, INCLUDING BUT NOT LIMITED TO ANY SPECIAL, INDIRECT, INCIDENTAL, STATUTORY, OR CONSEQUENTIAL DAMAGES, INCLUDING WITHOUT LIMITATION, LOST REVENUES OR LOST PROFITS THAT MAY RESULT FROM THE USE OF THE MATERIALS OR INFORMATION, WHETHER OR NOT THE RECIPIENT OF MATERIALS HAS BEEN ADVISED OF THE POSSIBILITY OF SUCH DAMAGE.

Skyworks products are not intended for use in medical, lifesaving or life-sustaining applications, or other equipment in which the failure of the Skyworks products could lead to personal injury, death, physical or environmental damage. Skyworks customers using or selling Skyworks products for use in such applications do so at their own risk and agree to fully indemnify Skyworks for any damages resulting from such improper use or sale.

Customers are responsible for their products and applications using Skyworks products, which may deviate from published specifications as a result of design defects, errors, or operation of products outside of published parameters or design specifications. Customers should include design and operating safeguards to minimize these and other risks. Skyworks assumes no liability for applications assistance, customer product design, or damage to any equipment resulting from the use of Skyworks products outside of stated published specifications or parameters.

Skyworks, the Skyworks symbol, and “Breakthrough Simplicity” are trademarks or registered trademarks of Skyworks Solutions, Inc., in the United States and other countries. Third-party brands and names are for identification purposes only, and are the property of their respective owners. Additional information, including relevant terms and conditions, posted at www.skyworksinc.com, are incorporated by reference.

Mouser Electronics

Authorized Distributor

Click to View Pricing, Inventory, Delivery & Lifecycle Information:

Skyworks:

SMP1302-003LF SMP1302-040LF SMP1302-074LF SMP1302-075LF