Leiditech

# SMDA12C

Bidirectional TVS Diode Array

## Features

- Ultra low leakage: nA level
- Operating voltage: 12V
- Low clamping voltage
- Complies with following standards:
  - – IEC 61000-4-2 (ESD) immunity test
    - Air discharge: ±15kV
    - Contact discharge: ±8kV
  - – IEC61000-4-4 (EFT) 40A (5/50ns)
  - – IEC61000-4-5 (Lightning) 12A (8/20μs)
- RoHS Compliant

## Dimensions SOP-08

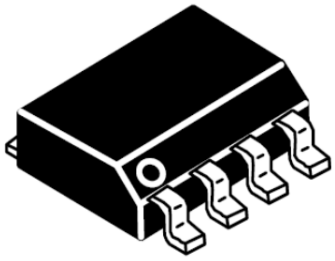

## Pin Configuration

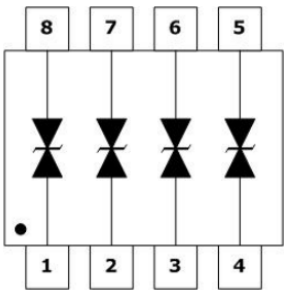


## Applications

- USB 2.0 power and data line
- Set-top box and digital TV
- Digital video interface (DVI)
- Notebook Computers
- SIM Ports
- 10/100 Ethernet

## Mechanical Characteristics

- Package: SOP-08
- Lead Finish: Lead Free
- UL Flammability Classification Rating 94V-0
- Quantity Per Reel:3,000pcs
- Reel Size:13 inch

## Absolute Maximum Ratings(Tamb=25°C unless otherwise specified)

| Parameter | Symbol | Value | Unit |
|---|---|---|---|
| Peak Pulse Power (8/20μs) | Ppp | 500 | W |
| ESD per IEC 61000−4−2 (Air) | $V_{ESD}$ | ±15 | Kv |
| ESD per IEC 61000−4−2 (Contact) | | ±8 | |
| Operating Temperature Range | $T_J$ | -55 to +125 | ℃ |
| Storage Temperature Range | $T_{STJ}$ | -55 to +150 | ℃ |



Download from alldatasheet.com

## Electrical Characteristics(TA=25°C unless otherwise specified)

| Part Number | Device Marking | $V_{RWM}$ (V) | $V_{BR}$ (V) | $I_T$ (mA) | $V_C$ @1A | Vc | | $I_R$ μA (Max) | C (Pf) (Typ.) |
|---|---|---|---|---|---|---|---|---|---|
| | | | | | | (Max) | (@A) | | |
| SMDA12C | SMDA12C | 12 | 13.3 | 1 | 19 | 25.9 | 5 | 1 | 100 |

## Characteristic Curves

**Fig1. 8/20μs Pulse Waveform**

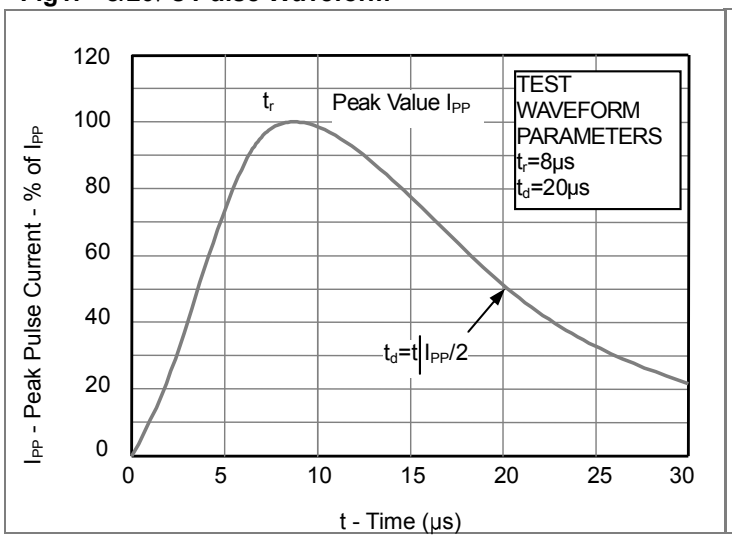


**Fig2. ESD Pulse Waveform (according to IEC 61000-4-2)**

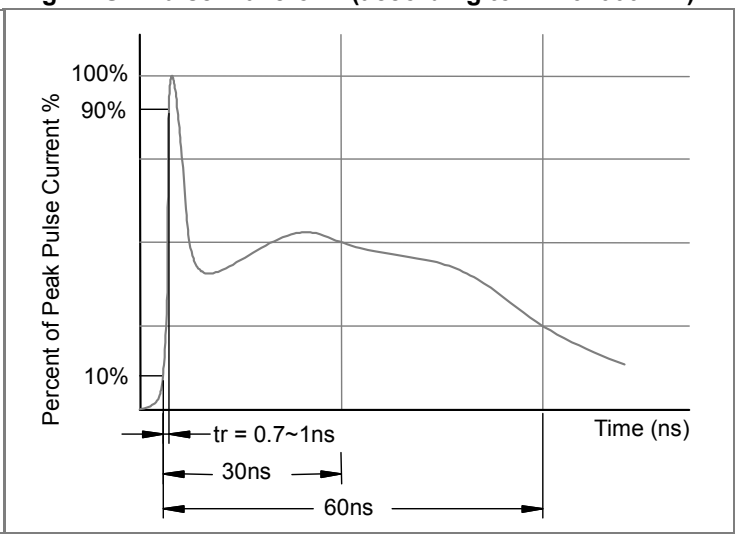


**Fig3. Power Derating Curve**

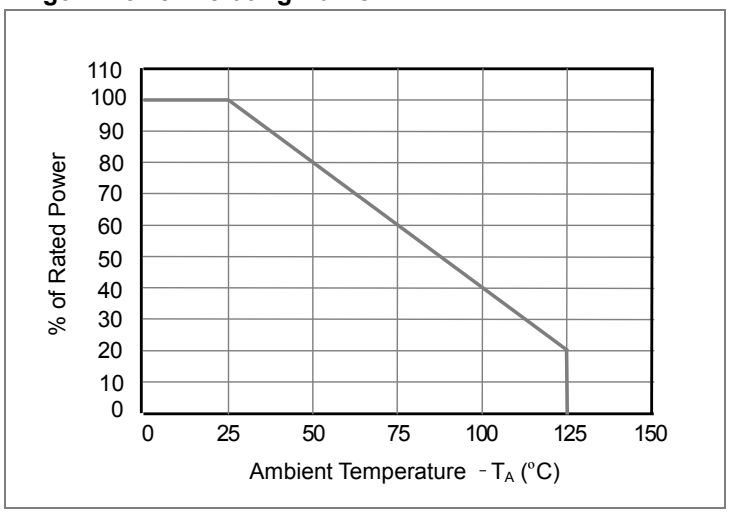




Download from alldatasheet.com

## SOP-08 Mechanical Data

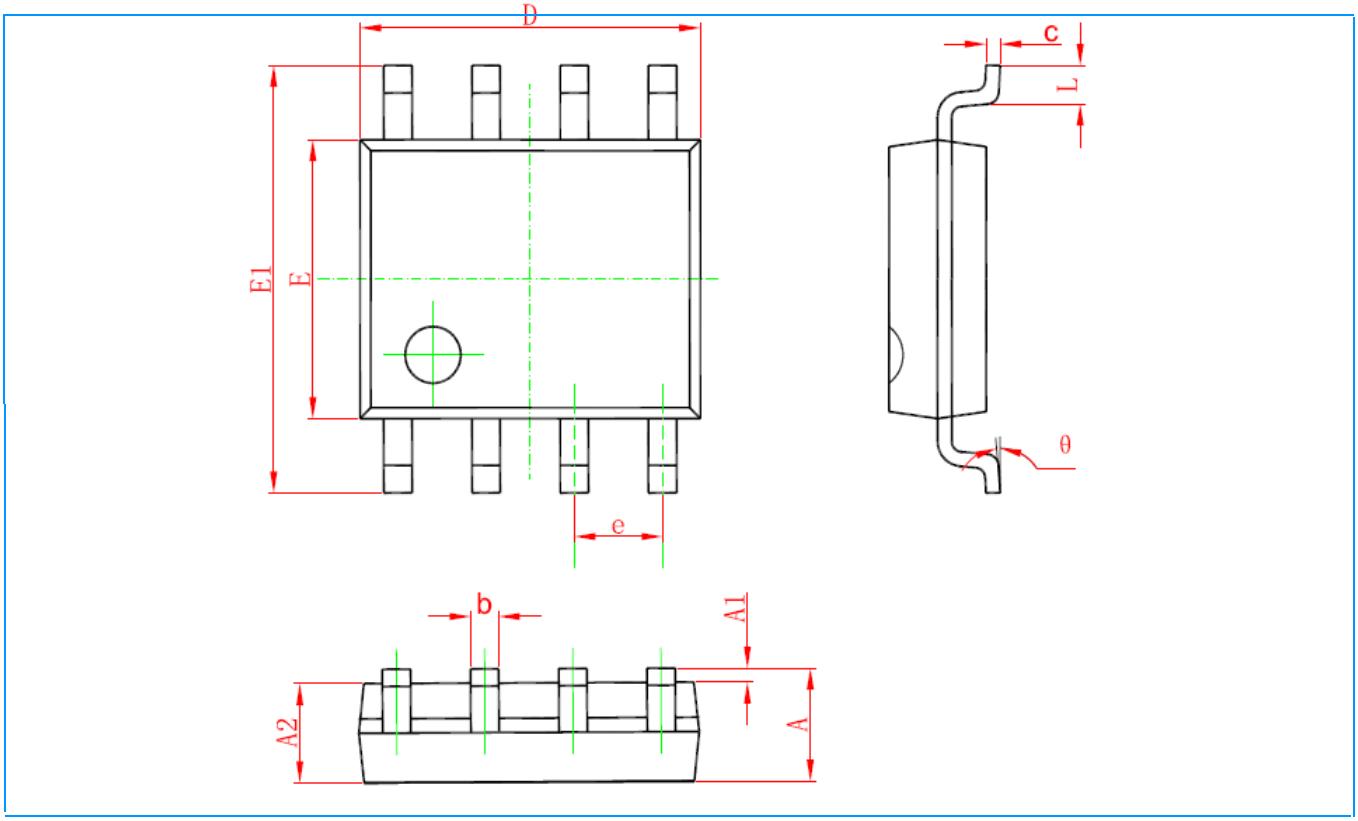


| Symbol | Dimensions In Millimeters | | Dimensions In Inches | |
|---|---|---|---|---|
| | Min | Max | Min | Max |
| A | 1.350 | 1.750 | 0.053 | 0.069 |
| A1 | 0.100 | 0.250 | 0.004 | 0.010 |
| A2 | 1.350 | 1.550 | 0.053 | 0.061 |
| b | 0.330 | 0.510 | 0.013 | 0.020 |
| c | 0.170 | 0.250 | 0.006 | 0.010 |
| D | 4.700 | 5.100 | 0.185 | 0.200 |
| E | 3.800 | 4.000 | 0.150 | 0.157 |
| E1 | 5.800 | 6.200 | 0.228 | 0.244 |
| e | 1.270 (BSC) | | 0.050 (BSC) | |
| L | 0.400 | 1.270 | 0.016 | 0.050 |
| θ | 0° | 8° | 0° | 8° |

Shanghai Leiditech Electronic Co.,Ltd
Email: sale1@leiditech.com
Tel : +86- 021 50828806
Fax : +86- 021 50477059



Download from alldatasheet.com