RUILON
ELECTRONICS



Gas Discharge Tubes

SMD4532 Series

361° Circuit Protection System

Specifications are subject to change without notice.

Please refer to http://www.ruilon.com for current information.

RUILON
ELECTRONICS

Gas Discharge Tubes - SMD4532 Series

GDT introduction:Gas discharge tubes (GDT) use noble gasses enclosed in ceramic tubes to provide an alternate circuit path for voltage spikes.The ceramic envelope and with nickel connectors allow for high loads and Ruilon offers products that function at 20KA,40KA,50KA,60KA,100KA&150KA. The breakdown voltages of the devices have a wide range (up to 20% tolerance).Major applications are high frequency telecommunication lines,stations, security systems,HID and high quality Surge Protection Devices (SPD).

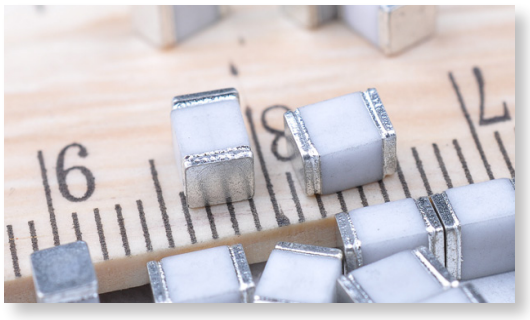

Features

1. RoHS & HF compliant
2. SMD Structure
3. DC Spark-over voltage: 70~600V
4. Low Capacitance
5. Agency Recognition : UL
6. Operating temperature : -30°C ~ +85°C
Storage temperature: -40°C ~ +115°C

Recommended Applications

1. Cable Modem
2. xDSL
3. Set-Top Box
4. TV sets
5. Power supplier
6. Consumer electronics

Part Number Code

S	M	D	4	5	3	2	-	0	7	5	N

surface mount	4.5*3.2*1.6MM	voltage	±30%

Gas Discharge Tubes - SMD4532 Series

Electriacl Characteristics

Part No.	DC Spark-over Voltage	Maximum Impulse Breakdown Voltage	Impulse Withstanding Voltage Capacity	Impulse Life	Normal Alternating Discharge Current	DC Holdover Voltage
	100V/S	8/20μs		8/20 μs,100A	@DC 100V	1MHz
	(V)	(A)		Times	(MΩ)	(pF)
SMD4532-070NF	70 (50~90)	3KA (Positive/Negative10 Times)	10/700us 6kV(Positive/ Negative10 Times)	300	Min. 100	0.5
SMD4532-075NF	75 (55~95)	3KA (Positive/Negative10 Times)	10/700us 6kV(Positive/ Negative10 Times)	300	Min. 100	0.5
SMD4532-090NF	90 (63~117)	3KA (Positive/Negative10 Times)	10/700us 6kV(Positive/ Negative10 Times)	300	Min. 100	0.5
SMD4532-120NF	120 (84~156)	3KA (Positive/Negative10 Times)	10/700us 6kV(Positive/ Negative10 Times)	300	Min. 100	0.5
SMD4532-150NF	150 (105~195)	3KA (Positive/Negative10 Times)	10/700us 6kV(Positive/ Negative10 Times)	300	Min. 100	0.5
SMD4532-200NF	200 (140~260)	3KA (Positive/Negative10 Times)	10/700us 6kV(Positive/ Negative10 Times)	300	Min. 100	0.5
SMD4532-230NF	230 (161~299)	3KA (Positive/Negative10 Times)	10/700us 6kV(Positive/ Negative10 Times)	300	Min. 100	0.5
SMD4532-300NF	300 (210~390)	3KA (Positive/Negative10 Times)	10/700us 6kV(Positive/ Negative10 Times)	300	Min. 100	0.5
SMD4532-350NF	350 (245~455)	3KA (Positive/Negative10 Times)	10/700us 6kV(Positive/ Negative10 Times)	300	Min. 100	0.5
SMD4532-400NF	400 (280~520)	3KA (Positive/Negative10 Times)	10/700us 6kV(Positive/ Negative10 Times)	300	Min. 100	0.5
SMD4532-420NF	420 (294~546)	3KA (Positive/Negative10 Times)	10/700us 6kV(Positive/ Negative10 Times)	300	Min. 100	0.5
SMD4532-470NF	470 (329~611)	3KA (Positive/Negative10 Times)	10/700us 6kV(Positive/ Negative10 Times)	300	Min. 100	0.5
SMD4532-500NF	500 (350~650)	3KA (Positive/Negative10 Times)	10/700us 6kV(Positive/ Negative10 Times)	300	Min. 100	0.5
SMD4532-600NF	600 (420~780)	3KA (Positive/Negative10 Times)	10/700us 6kV(Positive/ Negative10 Times)	300	Min. 100	0.5

Gas Discharge Tubes - SMD4532 Series

Dimension

Unit:mm

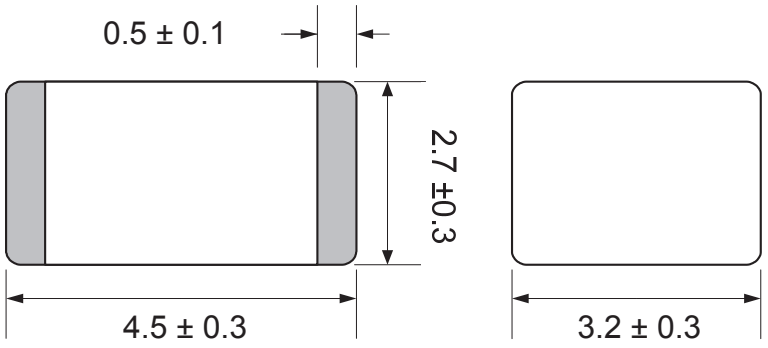

Recommended Pad Size

Unit:mm

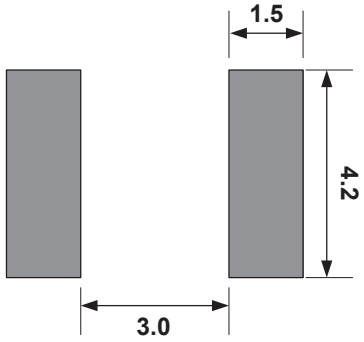

Packaging Taping

Unit:mm

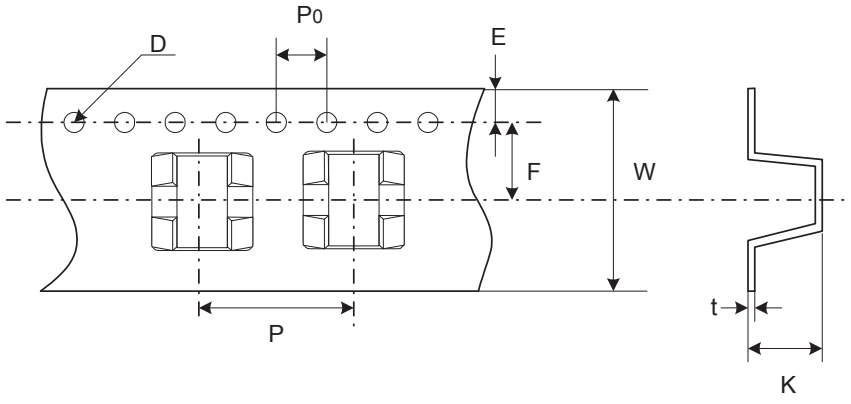

Gas Discharge Tubes - SMD4532 Series

Quantity: 900pcs per reel (13”)

Unit:mm

Item	P	PO	W	F	E	D	K	t
Spec.	8.0	4.0	12.0	5.45	1.75	Φ1.55	3.1	0.4
Tolerance	±0.1	±0.1	±0.13	±0.1	±0.1	±0.05	±0.1	±0.05

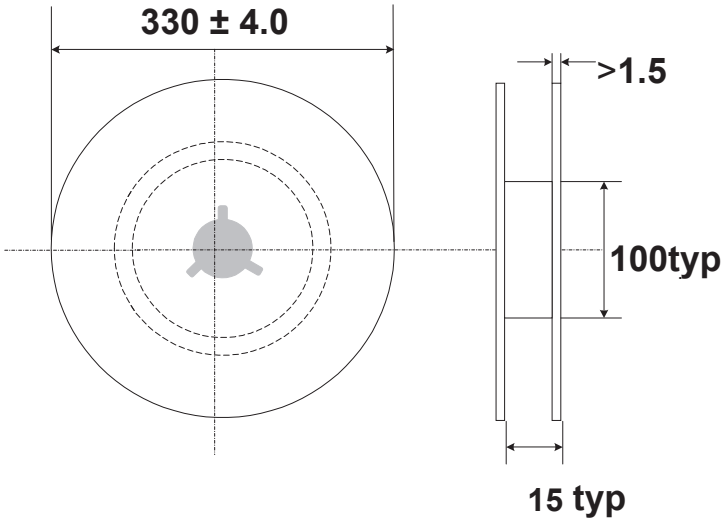

Warehouse Storage Conditions of Products

- Storage Conditions:

1. Storage Temperature: -10°C~+40°C
2. Relative Humidity:≤75%RH
3. Keep away from corrosive atmosphere and sunlight.

- Period of Storage: 1 year

RuiLongYuan Electronics Co., Ltd.

- Reproducing and modifying information of the document is prohibited without permission from Ruilongyuan International Inc.

- Ruilongyuan International Inc. reserves the rights to make changes of the content herein the document anytime without notification. Please refer to our website for the latest document.

- Ruilongyuan International Inc. disclaims any and all liability arising out of the application or use of any product including damages incidentally and consequentially occurred.

- Ruilongyuan International Inc. does not assume any and all implied warranties, including warranties of fitness for particular purpose, non-infringement and merchantability.

- Applications shown on the herein document are examples of standard use and operation. Customers are responsible in comprehending the suitable use in particular applications.Ruilongyuan International Inc. makes no representation or warranty that such applications will be suitable for the specifed use without further testing or modifcation.

- The products shown herein are not designed and authorized for equipments requiring high level of reliability or relating to human life and for any applications concerning life-saving or life-sustaining, such as medical instruments, transportation equipment,aerospace machinery et cetera. Customers using or selling these products for use in such applications do so at their own risk and agree to fullyindemnify Ruilongyuan International Inc. for any damages resulting from such improper use or sale.

Tel: +86-755-8290 8296 **Fax: +86-755-8290 8002** **E-mail: jack@ruilon.com**