SMCJ-H Series

General Information

The SMC-H series is designed to protect voltage sensitive components from high voltage, high energy transients. They have excellent clamping capability, high surge capability, low zener impedance and fast response time. The SMC-H series is supplied in YINT Semiconductor's exclusive, cost-effective, highly reliable and is ideally suited for use in communication systems, automotive, numerical controls, process controls, medical equipment, business machines, power supplies and many other industrial/consumer Applications.

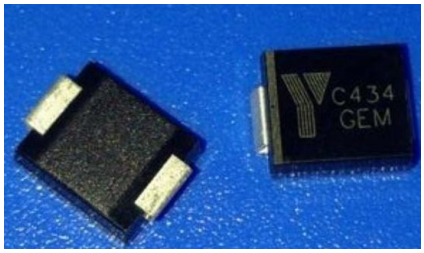

Molded plastic
glass passivated junction.

Features

- Case: DO-214AB/SMC
- For surface mounted applications in order to optimize board space.
- Polarity: Color band denoted positive end (cathode) except Bidirectional.
- Typical failure mode is short from over-specified voltage or current
- High Temperature soldering:260°C/10 seconds at terminals.
- Terminal: Solder plated, solderable per MIL-STD-750, Method 2026.

Applications

TVS devices are ideal for the protection of I/O Interfaces, V_{CC} bus and other vulnerable circuits used in Telecom, Computer, Industrial and Consumer electronic applications.

Electrical Characteristics (@ TA = 25° C Unless Otherwise Noted)

Parameter	Symbol	Value	Unit
Minimum Peak Pulse Power Dissipation (T = 1 ms) (note1;note 2)	P_{PK}	1500	Watts
Peak Forward Surge Current 8.3 ms Single Half Sine Wave Superimposed on Rated Load (JEDEC Method) (Note 3)	I_{FSM}	200	Amps
Steady State Power Dissipation @ TL = 75 ° C	$P_{M(AV)}$	6.5	Watts
Maximum Instantaneous Forward Voltage @ I PP = 50 A (For Unidirectional Units Only) (note4;note 5)	V_F	3.5/5	Volts
Operating Temperature Range	T_J	-55 to +150	° C
Storage Temperature Range	T_{STG}	-55 to +175	° C

NOTES:

1. Non-repetitive current pulse, per Pulse Waveform graph and derated above T_A = 25 °C per Pulse Derating Curve.
2. Thermal Resistance Junction to Lead.
3. 8.3 ms Single Half-Sine Wave duty cycle = 4 pulses maximum per minute (unidirectional units only).
4. Single Phase, Half Wave, 60 Hz, resistive or inductive load. For capacitive load, derate current by 20 %.
5. V_F<3.5V for V_{BR}< 200V and V_F <5.0V for V_{BR}> 201V.

Download from alldatasheet.com

Electrical Characteristics (TA = 25 °C unless otherwise noted)

Part Number (Bi)	Part Number (Uni)	MARKING		Reverse Stand off Voltage V_R (Volts)	Breakdown Voltage V_{BR} (Volts)@I_T		Test Current I_T(mA)	Maximum Reverse Leakage I_R @ V_R(μA)	Maximum Peak Pulse Current Ipp(A)	Maximum Clamping Voltage V_C @ I_{pp}(V)
		BI	UNI		Min .V	Max .V				
SMCJ5.0CA-H	SMCJ5.0A-H	BDEH	GDEH	5.0	6.40	7.00	10	500	163.0	9.2
SMCJ6.0CA-H	SMCJ6.0A-H	BDGH	GDGH	6.0	6.67	7.37	10	500	145.6	10.3
SMCJ 6.5CA-H	SMCJ6.5A-H	BDKH	GDKH	6.5	7.22	7.90	10	300	134.0	11.2
SMCJ7.0CA-H	SMCJ7.0A-H	BDMH	GDMH	7.0	7.78	8.60	10	200	125.0	12.0
SMCJ 7.5CA-H	SMCJ7.5A-H	BDPH	GDPH	7.5	8.33	9.21	1	100	116.3	12.9
SMCJ 8.0CA-H	SMCJ8.0A-H	BDRH	GDRH	8.0	8.89	9.83	1	50	110.3	13.6
SMCJ8.5 CA-H	SMCJ8.5A-H	BDTH	GDTH	8.5	9.44	10.40	1	20	104.2	14.4
SMCJ9.0 CA-H	SMCJ9.0A-H	BDVH	GDVH	9.0	10.00	11.10	1	10	97.4	15.4
SMCJ10CA-H	SMCJ10A-H	BDXH	GDXH	10.0	11.10	12.30	1	1	88.3	17.0
SMCJ11CA-H	SMCJ11A-H	BDZH	GDZH	11.0	12.20	13.50	1	1	82.5	18.2
SMCJ12CA-H	SMCJ12A-H	BEEH	GEEH	12.0	13.30	14.70	1	1	75.4	19.9
SMCJ13CA-H	SMCJ13A-H	BEGH	GEGH	13.0	14.40	15.90	1	1	69.8	21.5
SMCJ14CA-H	SMCJ14A-H	BEKH	GEKH	14.0	15.60	17.20	1	1	64.7	23.2
SMCJ15CA-H	SMCJ15A-H	BEMH	GEMH	15.0	16.70	18.50	1	1	61.5	24.4
SMCJ16CA-H	SMCJ16A-H	BEPH	GEPH	16.0	17.80	19.70	1	1	57.7	26.0
SMCJ17CA-H	SMCJ17A-H	BERH	GERH	17.0	18.90	20.90	1	1	54.4	27.6
SMCJ18CA-H	SMCJ18A-H	BETH	GETH	18.0	20.00	22.10	1	1	51.4	29.2
SMCJ20CA-H	SMCJ20A-H	BEVH	GEVH	20.0	22.20	24.50	1	1	46.3	32.4
SMCJ22CA-H	SMCJ22A-H	BEXH	GEXH	22.0	24.40	26.90	1	1	42.3	35.5
SMCJ24CA-H	SMCJ24A-H	BEZH	GEZH	24.0	26.70	29.50	1	1	38.6	38.9
SMCJ26CA-H	SMCJ26A-H	BFEH	GFEH	26.0	28.90	31.90	1	1	35.7	42.1
SMCJ28CA-H	SMCJ28A-H	BFGH	GFGH	28.0	31.10	34.40	1	1	33.1	45.4
SMCJ30CA-H	SMCJ30A-H	BFKH	GFKH	30.0	33.30	36.80	1	1	31.0	48.4
SMCJ33CA-H	SMCJ33A-H	BFMH	GFMH	33.0	36.70	40.60	1	1	28.2	53.3
SMCJ36CA-H	SMCJ36A-H	BFPH	GFPH	36.0	40.00	44.20	1	1	25.9	58.1
SMCJ40CA-H	SMCJ40A-H	BFRH	GFRH	40.0	44.40	49.10	1	1	23.3	64.5
SMCJ43CA-H	SMCJ43A-H	BFTH	GFTH	43.0	47.80	52.80	1	1	21.7	69.4
SMCJ45CA-H	SMCJ45A-H	BFVH	GFVH	45.0	50.00	55.30	1	1	20.6	72.7
SMCJ48CA-H	SMCJ48A-H	BFXH	GFXH	48.0	53.30	58.90	1	1	19.4	77.4
SMCJ51CA-H	SMCJ51A-H	BFZH	GFZH	51.0	56.70	62.70	1	1	18.2	82.4
SMCJ54CA-H	SMCJ54A-H	BGEH	GGEH	54.0	60.00	66.30	1	1	17.3	87.1
SMCJ58CA-H	SMCJ58A-H	BGGH	GGGH	58.0	64.40	71.20	1	1	16.1	93.6
SMCJ60CA-H	SMCJ60A-H	BGKH	GGKH	60.0	66.70	73.70	1	1	15.5	96.8
SMCJ64CA-H	SMCJ64A-H	BGMH	GGMH	64.0	71.10	78.60	1	1	14.6	103.0
SMCJ70CA-H	SMCJ70A-H	BGPH	GGPH	70.0	77.80	86.00	1	1	13.3	113.0
SMCJ75CA-H	SMCJ75A-H	BGRH	GGRH	75.0	83.30	92.10	1	1	12.4	121.0

Download from alldatasheet.com

Part Number (Bi)	Part Number (Uni)	MARKING		Reverse Stand off Voltage V_R (Volts)	Breakdown Voltage V_{BR} (Volts)@I_T		Test Current I_T(mA)	Maximum Reverse Leakage I_R @ V_R(μA)	Maximum Peak Pulse Current Ipp(A)	Maximum Clamping Voltage V_C @I_{pp}(V)
		BI	UNI		Min .V	Max .V				
SMCJ78CA-H	SMCJ78A-H	BGTH	GGTH	78.0	86.70	95.80	1	1	11.9	126.0
SMCJ85CA-H	SMCJ85A-H	BGVH	GGVH	85.0	94.4	104.0	1	1	11.0	137.0
SMCJ90CA-H	SMCJ90A-H	BGXH	GGXH	90.0	100.0	111.0	1	1	10.3	146.0
SMCJ100CA-H	SMCJ100A-H	BGZH	GGZH	100.0	111.0	123.0	1	1	9.3	162.0
SMCJ110CA-H	SMCJ110A-H	BHEH	GHEH	110.0	122.0	135.0	1	1	8.5	177.0
SMCJ120CA-H	SMCJ120A-H	BHGH	GHGH	120.0	133.0	147.0	1	1	7.8	193.0
SMCJ130CA-H	SMCJ130A-H	BHKH	GHKH	130.0	144.0	159.0	1	1	7.2	209.0
SMCJ150CA-H	SMCJ150A-H	BHMH	GHMH	150.0	167.0	185.0	1	1	6.2	243.0
SMCJ160CA-H	SMCJ160A-H	BHPH	GHPH	160.0	178.0	197.0	1	1	5.8	259.0
SMCJ170CA-H	SMCJ170A-H	BHRH	GHRH	170.0	189.0	209.0	1	1	5.5	275.0

I-V Curve Characteristics

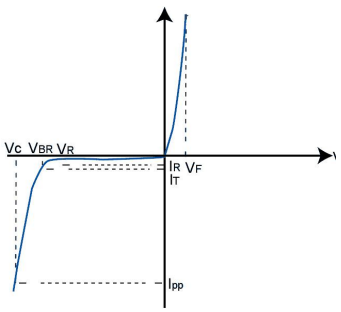

Uni-directional

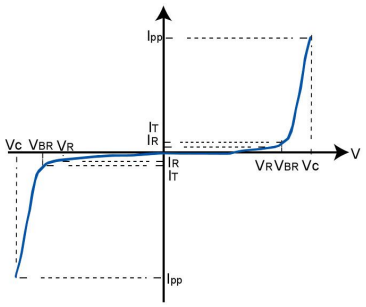

Bi-directional

Symbol	Parameter
I_{PP}	Maximum Reverse Peak Pulse Current
V_C	Clamping Voltage @ I_{PP}
V_{RWM}	Working Peak Reverse Voltage
I_R	Maximum Reverse Leakage Current @V_{RWM}
V_{BR}	Breakdown Voltage @ I_T
I_T	Test Current

Rating & Characteristic Curves

Figure 1- Pulse Derating Curve

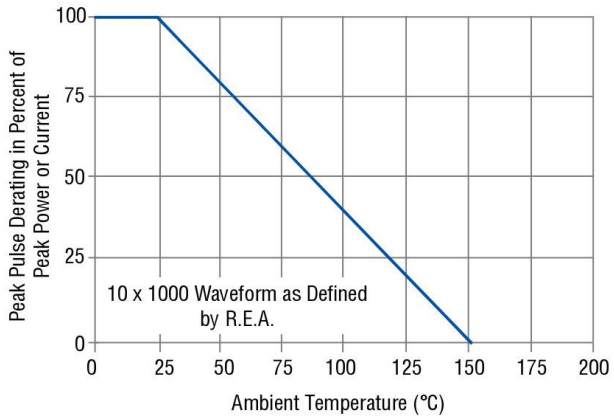

Figure 2- Maximum Non-Repetitive Surge Current

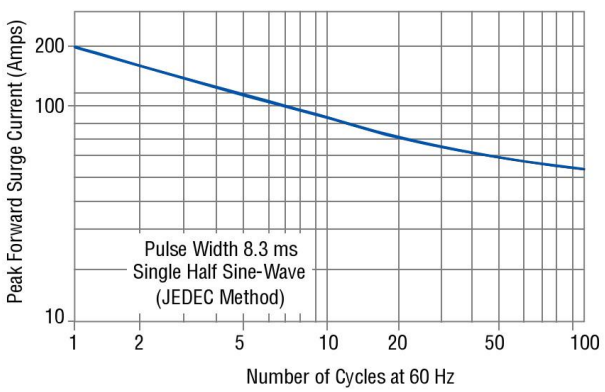

Download from alldatasheet.com

Figure 3- Typical Junction Capacitance

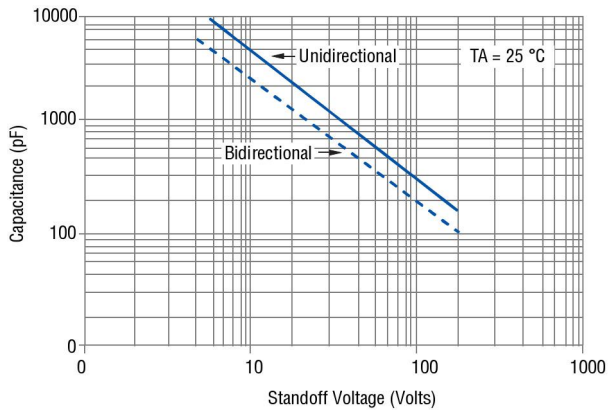

Figure 4- Pulse Waveform

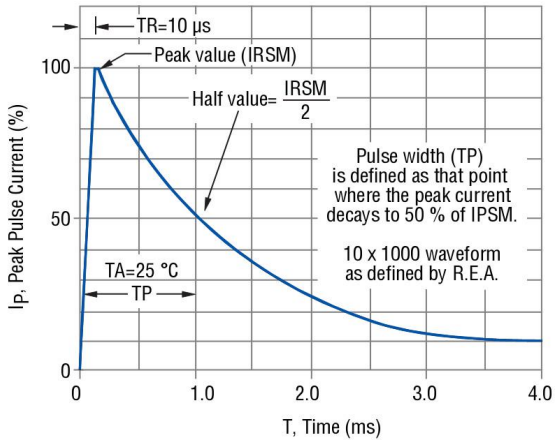

Figure 5- Steady State Power Derating Curve

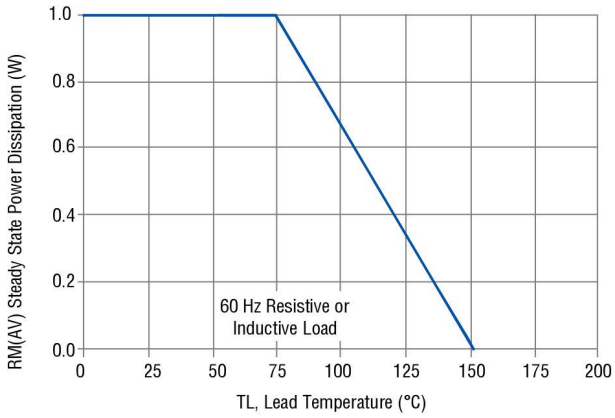

Figure 6- Pulse Rating Curve

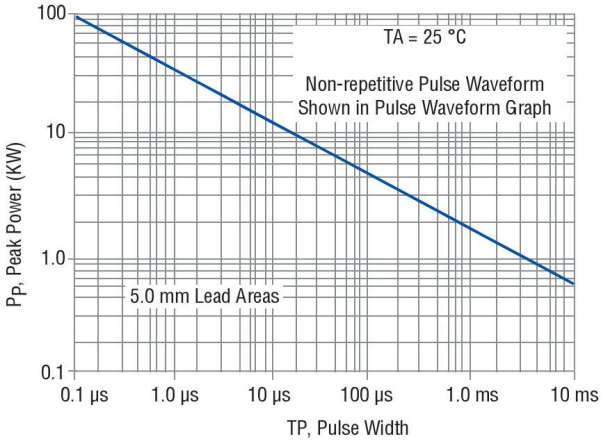

PACKAGE OUTLINE DIMENSIONS in inches (millimeters)

DO-214AB(SMC)

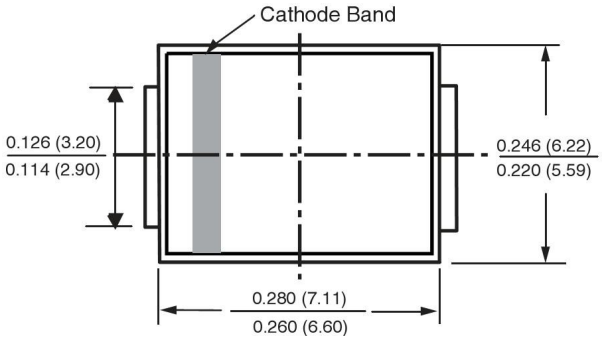

Mounting Pad Layout

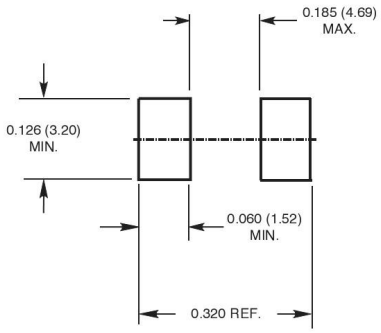

Download from alldatasheet.com

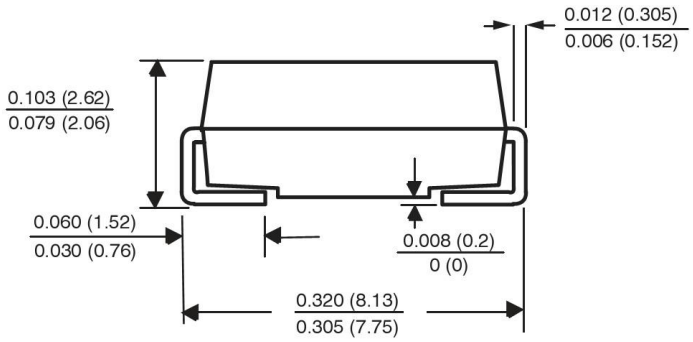

Part Numbering System

SMBJ XXX CA - H

- H: High reliability
- CA: Types A: Uni-Polar; CA: Bi-Polar
- XXX: Stand-off Voltage, e.g. 6.5=6.5V 30=30.0V
- SMBJ: Peak pulse power, e.g. SMA=400W SMB=600W SMC=1500W SMD=3000W P6SMB=600W

Part Marking System

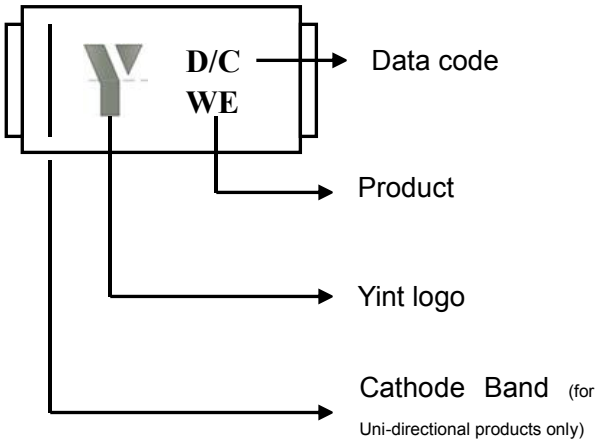

Disclaimer

Specifications are subject to change without notice.

The device characteristics and parameters in this data sheet can and do vary in different applications and actual device performance may vary over time.

Users should verify actual device performance in their specific applications.

Download from alldatasheet.com