NOTES:
1. MOUNTING: Mounts in a Ø.171±.002 [Ø4.34mm±.05] panel hole on .250 [6.35mm] centers. Panel thickness .031 [.8mm] to .094 [2.39mm]. Panel hole should be deburred, but not chamfered.
2. ASSEMBLY:Insert lens through panel hole, slide RNG 132 retainer on back of lens. PCB mounted LEDs slide into lens when the panel cover is closed or the PCB card is inserted into the case.
3. MATERIAL: Polycarbonate, UL 94-V2
4. U.S. & Foreign Pat. Issued & Pend.

REVISIONS				
ECN#	REV.	DESCRIPTION	DATE	INITIALS
	001	REVISED PER ECR111009AZ01	4-23-10	SMU

RETAINER
(ORDER SEPARATELY)

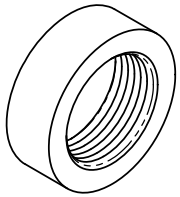

RNG 132

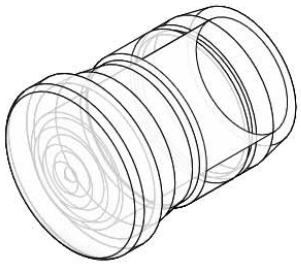

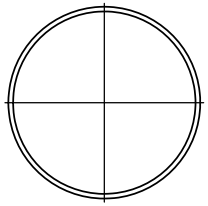

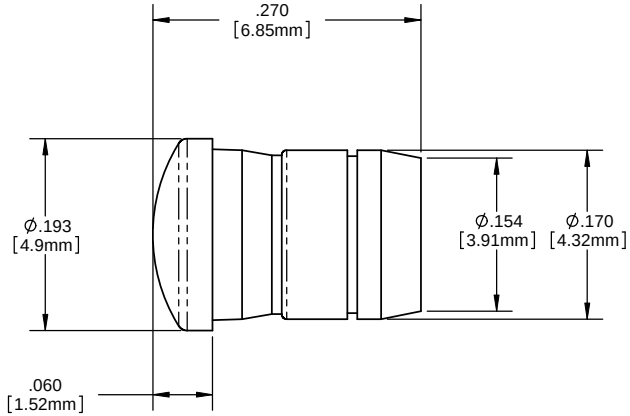

ORDERING CODE : **SMC 170 XXX**

MODEL

LENS COLOR	
RTP	RED TRANSPARENT
ATP	AMBER TRANSPARENT
GTP	GREEN TRANSPARENT
BTP	BLUE TRANSPARENT
YTP	YELLOW TRANSPARENT
CTP	CLEAR TRANSPARENT

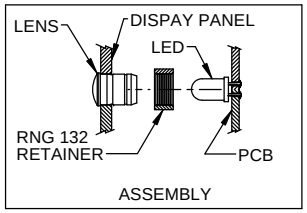

ASSEMBLY

UNLESS OTHERWISE SPECIFIED DIMENSIONS ARE IN INCHES:
ANGLES ±1°
DECIMALS .X ±.020 .XX ±.010 .XXX ±.005
FINISH
BREAK ALL CORNERS AND SHARP EDGES .030 MAX
THIRD ANGLE PROJECTION

PROPRIETARY AND CONFIDENTIAL
THE INFORMATION CONTAINED IN THIS DRAWING IS THE SOLE PROPERTY OF VISUAL COMMUNICATIONS COMPANY, INC. ANY REPRODUCTION IN PART OR AS A WHOLE WITHOUT THE WRITTEN PERMISSION OF VISUAL COMMUNICATIONS COMPANY, INC IS PROHIBITED.

MATERIAL: POLYCARBONATE, UL 94-V2

FINISH: SEE NOTES

APPROVAL	DATE
DRAWN: SMU	4-23-10
CHECKED: DZ	4-23-10

DO NOT SCALE DRAWING

VISUAL COMMUNICATIONS COMPANY, INC.
190 Bosstick Boulevard, Suite101 San Marcos, CA 92069 USA
Phone (760) 560-1300 Fax (760) 560-1301 email vccsales@vcclite.com

TITLE: 3MM ROUND FRESNEL LOW PROFILE LENS

SIZE	DWG. NO.	REV
B	SMC 170 XXX	001

SCALE: 12:1 SHEET 1 OF 1