SOLID STATE OPTRONICS



SMA4115

1 Form A
60V / 75mΩ
DC MOSFET Output Solid State Relay

Description

The SMA4115 is a DC, single-pole, single-throw, normally open solid-state relay in a 4 pin single inline package. The relay consists of an AlGaAs LED, optically coupled to a high performance Photo Diode Array (PDA), which in turn drives one low on-resistance, rugged source-to-source enhancement type DMOS transistor. The SMA4115 has an extremely low on resistance of 50mΩ (TYP) and a very high continuous load current rating of up to 3.4A. The combination of low on-resistance, small package outline and high load current capabilities make the SMA4115 a unique, unparalleled solid state relay.

The SMA4115 comes standard in a 4 pin SIP package.

Applications

- Multiplexers
- Meter reading systems
- Data Acquisition
- Medical Equipment
- Battery Monitoring
- Home/Safety Security Systems

Schematic Diagram

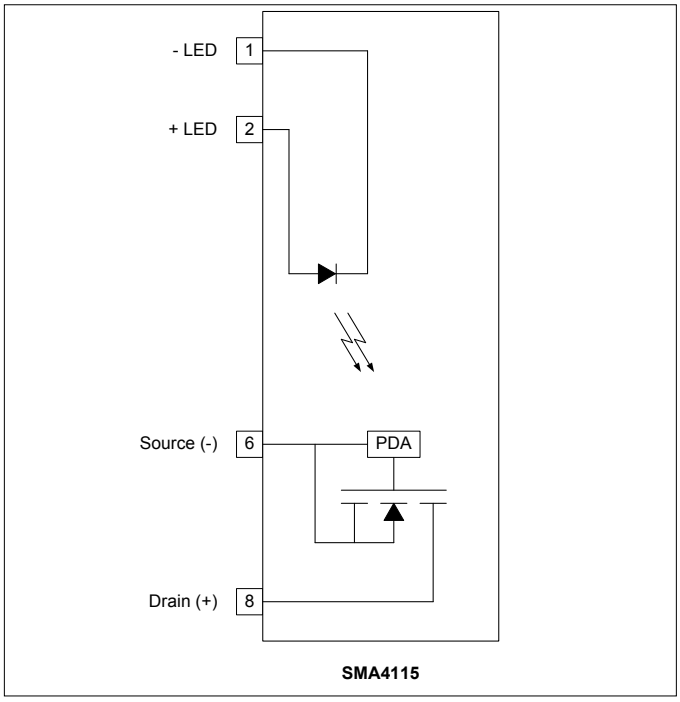

SMA4115

Features

- Low On Resistance (75mΩ MAX)
- High Continuous Load Current (3.4A)
- Low Input Control Power Consumption (2mA TYP)
- High Input-to-Output Isolation (up to 5kV MIN)
- Long Life / High Reliability
- RoHS / Pb-Free / REACH Compliant

Agency Approvals

UL/C-UL:	File # E201932
VDE:	File # 40035191 (EN 60747-5-2)

Absolute Maximum Ratings

The values indicated are absolute stress ratings. Functional operation of the device is not implied at these or any conditions in excess of those defined in electrical characteristics section of this document. Exposure to absolute Maximum Ratings may cause permanent damage to the device and may adversely affect reliability.

Storage Temperature	-55 to +125°C
Operating Temperature	-40 to +85°C
Continuous Input Current	50mA
Transient Input Current	500mA
Reverse Input Control Voltage	5V
Input Power Dissipation	40mW
Total Power Dissipation	1.2W
Solder Temperature – Wave (10sec)	260°C
Solder Temperature – IR Reflow (10sec)	260°C

Ordering Information

Part Number	Description
SMA4115	4 pin SIP, (25/Tube)
SMA4115-H	4 pin SIP, V_{ISO} = 5kV, (25/Tube)

NOTE: Suffixes listed above are not included in marking on device for part number identification

© 2014 Solid State Optronics • San José, CA

Electrical Characteristics, T_A = 25°C (unless otherwise specified)

Parameter	Symbol	Min.	Typ.	Max.	Units	Test Conditions
Input Specifications						
LED Forward Voltage	V_F	-	1.4	1.8	V	I_F = 10mA
LED Reverse Voltage	BV_R	5	-	-	V	I_R = 10µA
Input Reverse Current	I_R	-	-	10	µA	V_R = 5V
Turn-On Current	I_F	-	2	10	mA	$I_O = I_{O(MAX)}$
Turn-Off Current	I_{FOFF}	-	1	-	mA	$I_O = I_{O(MAX)}$
Output Specifications						
Blocking Voltage	V_B	60	-	-	V	I_F = 0mA, I_O = 1µA
Continuous Load Current	I_O	-	-	3.4	A	I_F = 10mA
On Resistance	R_{ON}	-	50	75	mΩ	I_F = 10mA, $I_O = I_{O(MAX)}$
Leakage Current	I_{Oleak}	-	0.1	1	µA	I_F = 0mA, V_O = 60V
Offset Voltage	V_{OFFSET}	-	-	0.2	mV	I_F = 10mA
Coupled Specifications						
Turn-On Time	T_{ON}	-	1	5	mS	I_F = 10mA, $I_O = I_{O(MAX)}$, V_O = 20V
Turn-Off Time	T_{OFF}	-	0.1	2	mS	I_F = 0mA, $I_O = I_{O(MAX)}$, V_O = 20V
Coupled Capacitance	$C_{COUPLED}$	-	2	-	pF	
Contact Transient Ratio	-	2,000	7,000	0	V/µS	dV = 50V
Isolation Specifications						
Isolation Voltage	V_{ISO}	3,750	-	-	V_{RMS}	RH ≤ 50%, t=1min
(-H Option)		5,000	-	-		
Input-Output Resistance	R_{I-O}	-	10^{12}	-	Ω	V_{I-O} = 500V_{DC}

SMA4115 Performance & Characteristics Plots, T_A = 25°C (unless otherwise specified)

Figure 1: *Typical Turn-On Time Distribution*
(N = 100, T_a = 25ºC)

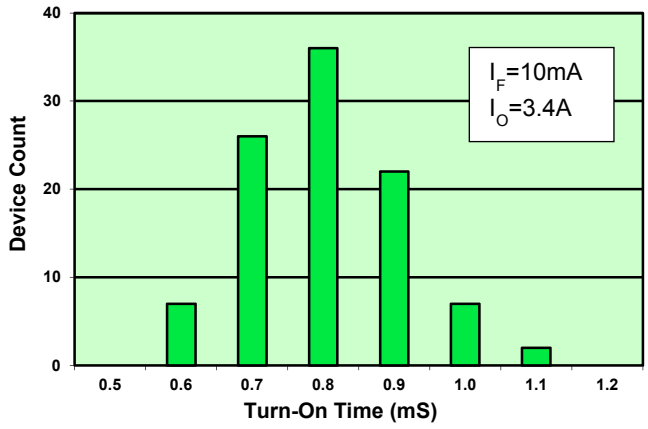

Figure 2: *Typical Turn-Off Time Distribution*
(N = 100, T_a = 25ºC)

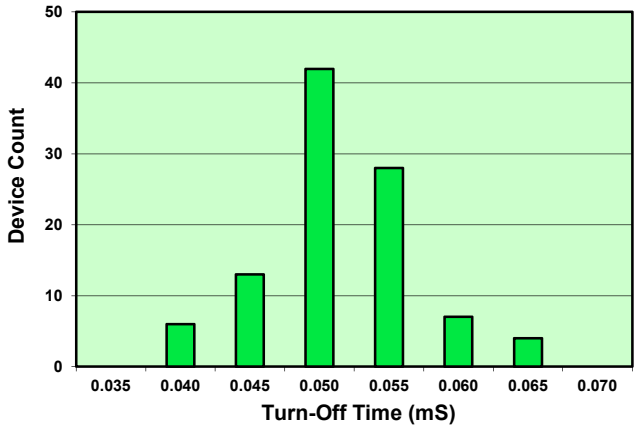

Figure 3: *Typical On-Resistance Distribution*
(N = 100, T_a = 25ºC)

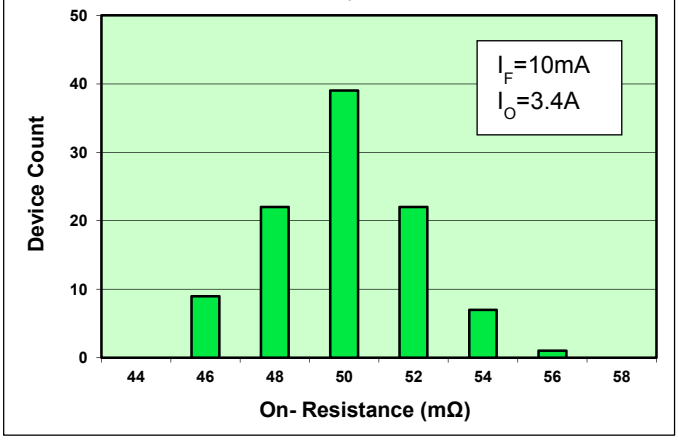

Figure 4: *Typical Output Leakage Current Distribution* (N = 100, T_a = 25ºC)

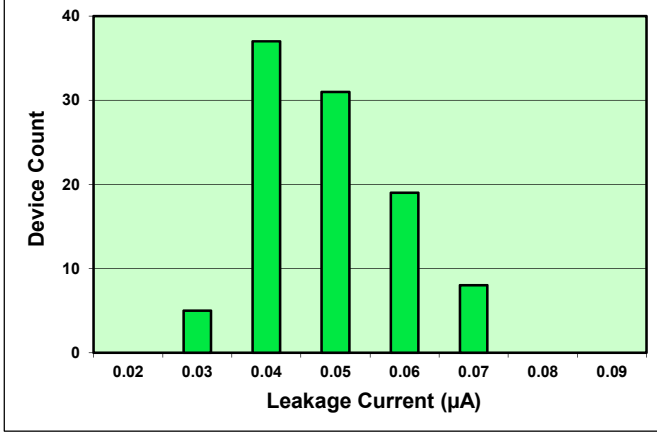

Figure 5: *Typical Blocking Voltage Distribution*
(N = 100, Ta = 25ºC)

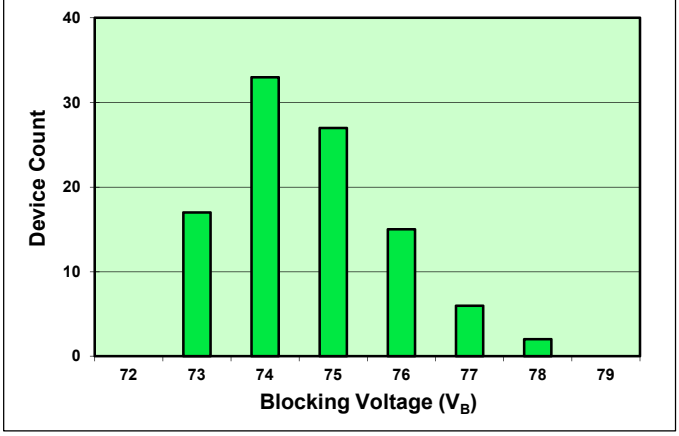

Figure 6: *Maximum Load Current vs. Temperature*

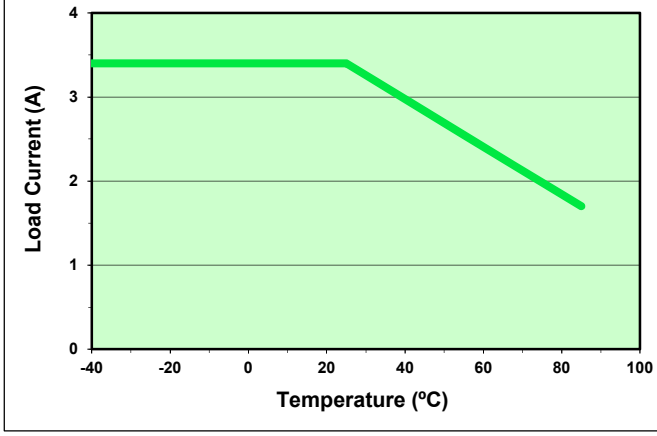

© 2014 Solid State Optronics • San José, CA

SMA4115 Solder Reflow Temperature Profile Recommendations

(1) *Infrared Reflow:*

Refer to the following figure as an example of an optimal temperature profile for single occurrence infrared reflow. Soldering process should not exceed temperature or time limits expressed herein. Surface temperature of device package should not exceed 250ºC:

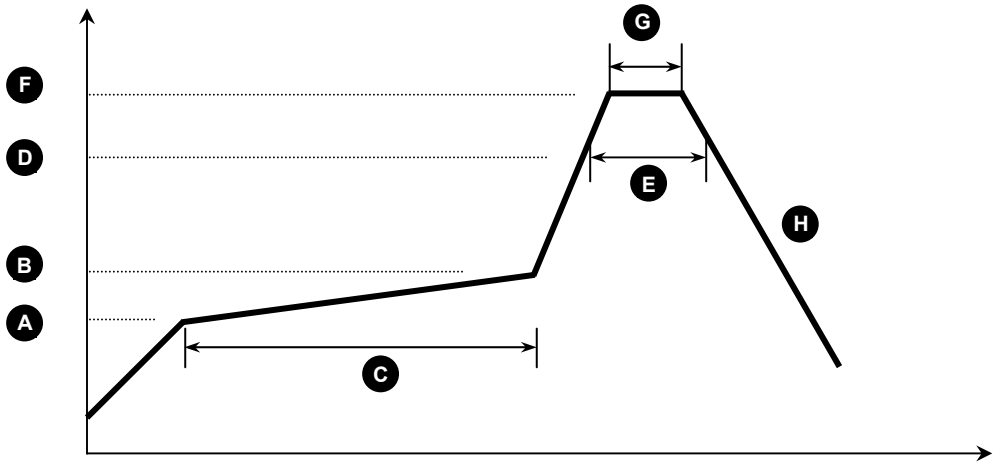

Process Step	Description	Parameter
A	Preheat Start Temperature (ºC)	150ºC
B	Preheat Finish Temperature (ºC)	180ºC
C	Preheat Time (s)	90 - 120s
D	Melting Temperature (ºC)	230ºC
E	Time above Melting Temperature (s)	30s
F	Peak Temperature, at Terminal (ºC)	260ºC
G	Dwell Time at Peak Temperature (s)	10s
H	Cool-down (ºC/s)	<6ºC/s

(2) *Wave Solder:*

Maximum Temperature:	260ºC (at terminal)
Maximum Time:	10s
Pre-heating:	100 - 150ºC (30 - 90s)
Single Occurrence	

(3) *Hand Solder:*

Maximum Temperature:	350ºC (at tip of soldering iron)
Maximum Time:	3s
Single Occurrence	

© 2014 Solid State Optronics • San José, CA

SMA4115 Package Dimensions

4 PIN SIP Package

Note: *All dimensions in inches with millimeters [mm] in parenthesis ()*

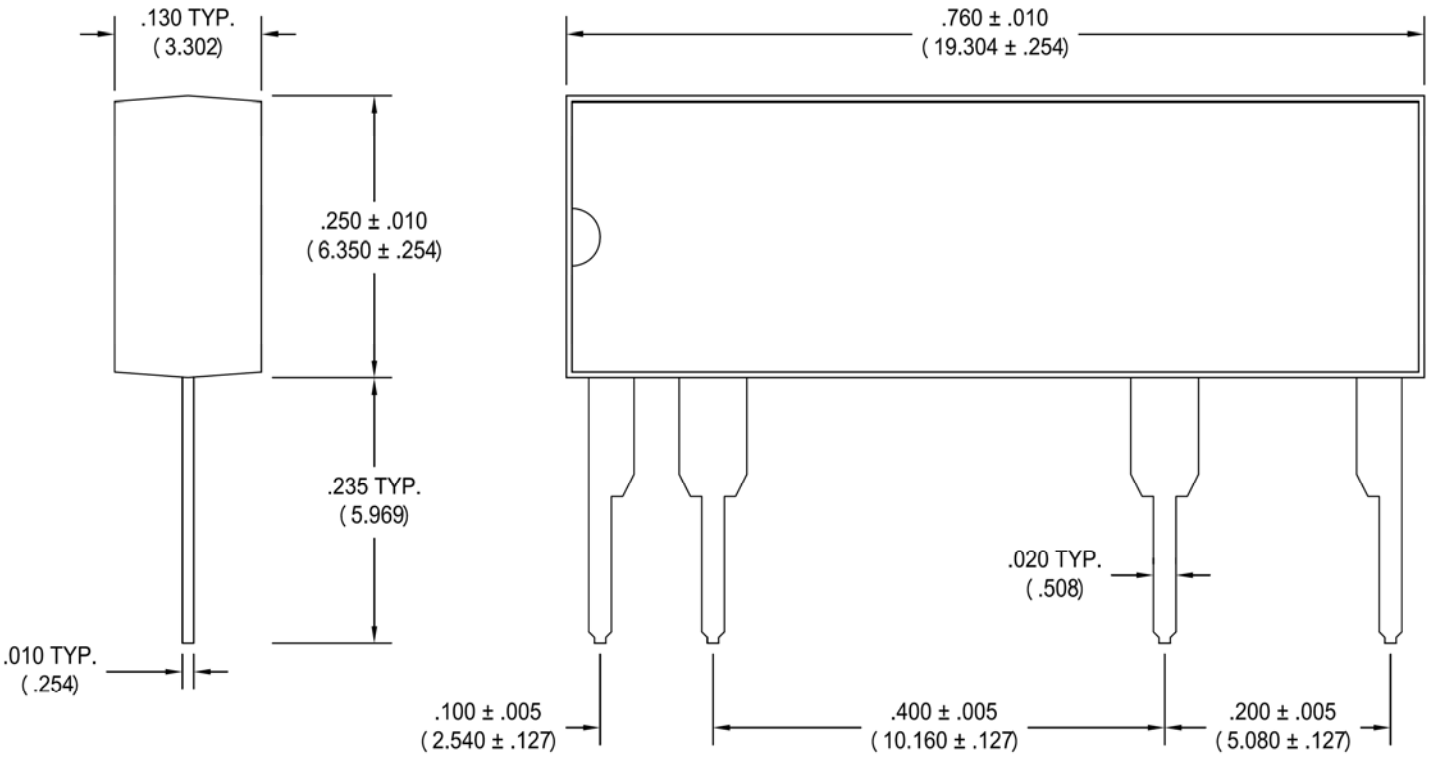

SMA4115 Package Marking

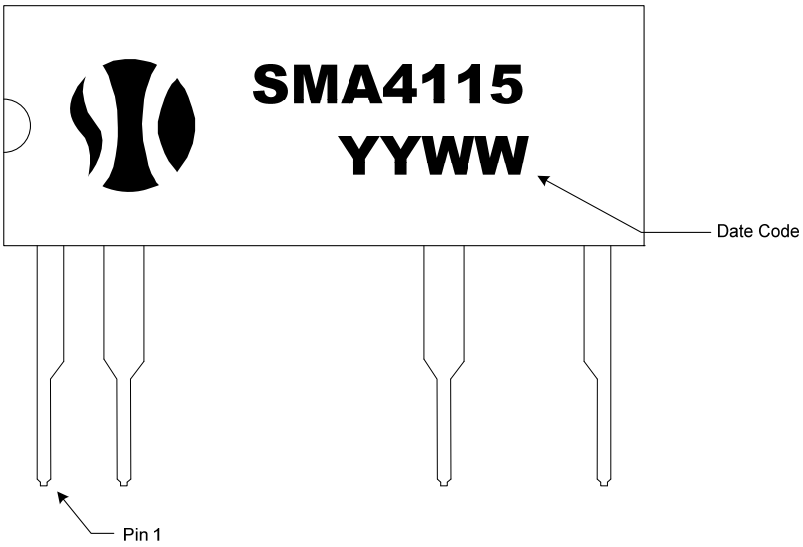

SMA4115 Package Weights

Device	Single Unit	Full Tube (25pcs)	Full Pouch (10 tubes)
SMA4115(-H)	0.88	35	370

Note: *All weights above are in GRAMS, and include packaging materials where applicable*

DISCLAIMER

Solid State Optronics (SSO) makes no warranties or representations with regards to the completeness and accuracy of this document. SSO reserves the right to make changes to product description, specifications at any time without further notices.
SSO shall not assume any liability arising out of the application or use of any product or circuit described herein. Neither circuit patent licenses nor indemnity are expressed or implied.
Except as specified in SSO's Standard Terms & Conditions, SSO disclaims liability for consequential or other damage, and we make no other warranty, expressed or implied, including merchantability and fitness for particular use.

LIFE SUPPORT POLICY

SSO does not authorize use of its devices in life support applications wherein failure or malfunction of a device may lead to personal injury or death. Users of SSO devices in life support applications assume all risks of such use and agree to indemnify SSO against any and all damages resulting from such use. Life support devices are defined as devices or systems which, (a) are intended for surgical implant into the body, or (b) support or sustain life, and (c) whose failure to perform when used properly in accordance with instructions for use can be reasonably expected to result in significant injury to the user, or (d) a critical component of a life support device or system whose failure can be reasonably expected to cause failure of the life support device or system, or to affect its safety or effectiveness.