A411 / SMA411

Cascadable Amplifier
10 to 400 MHz

Rev. V3

Features

- LOW NOISE FIGURE: 3.0 dB (TYP.)
- HIGH EFFICIENCY: 16 mA at +5 Vdc
- HIGH THIRD ORDER I.P.: +29 dBm at +8 Vdc (TYP.)
- MEDIUM OUTPUT LEVEL:+14.5 dBm at +8 Vdc (TYP.)

Description

The A411 RF amplifier is a discrete hybrid design, which uses thin film manufacturing processes for accurate performance and high reliability.
This single stage bipolar transistor feedback amplifier design displays impressive performance over a broadband frequency range. Use of an impedance transformer offers the benefit of high dynamic range and high efficiency.
Both TO-8 and Surface Mount packages are hermetically sealed, and MIL-STD-883 environmental screening is available.

Product Image

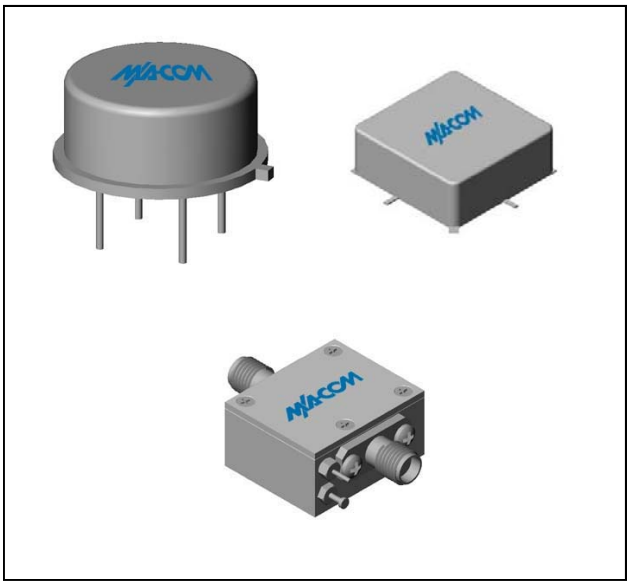

Ordering Information

Part Number	Package
A411	TO-8
SMA411	Surface Mount
CA411 **	SMA Connectorized

** The connectorized version is not RoHs compliant.

Electrical Specifications: $Z_0 = 50\Omega$, $V_{CC} = +5\ V_{DC}$

Parameter	Units	Typical	Guaranteed	
		25ºC	0º to 50ºC	-54º to +85ºC*
Frequency	MHz	5-450	10-400	10-400
Small Signal Gain (min)	dB	15.8	15.0	14.5
Gain Flatness (max)	dB	±0.3	±0.5	±0.8
Reverse Isolation	dB	20		
Noise Figure (max)	dB	3.0	3.5	4.0
Power Output @ 1 dB comp. (min)	dBm	10.0	9.0	8.5
IP3	dBm	+24		
IP2	dBm	+32		
Second Order Harmonic IP	dBm	+39		
VSWR Input / Output (max)		1.5:1 / 1.5:1	1.8:1 / 1.8:1	2.0:1 / 2.0:1
DC Current @ 5 Volts (max)	mA	16	18	20

Absolute Maximum Ratings

Parameter	Absolute Maximum
Storage Temperature	-62ºC to +125ºC
Case Temperature	125ºC
DC Voltage	+10 V
Continuous Input Power	+13 dBm
Short Term Input power (1 minute max.)	50 mW
Peak Power (3 µsec max.)	0.5 W
"S" Series Burn-In Temperature (case)	125ºC

Thermal Data: $V_{CC} = +5\ V_{DC}$

Parameter	Rating
Thermal Resistance θ_{jc}	184ºC/W
Transistor Power Dissipation P_d	0.059 W
Junction Temperature Rise Above Case T_{jc}	11ºC

* Over temperature performance limits for part number CA411, guaranteed from 0°C to +50°C only.

ADVANCED: Data Sheets contain information regarding a product M/A-COM Technology Solutions is considering for development. Performance is based on target specifications, simulated results, and/or prototype measurements. Commitment to develop is not guaranteed.
PRELIMINARY: Data Sheets contain information regarding a product M/A-COM Technology Solutions has under development. Performance is based on engineering tests. Specifications are typical. Mechanical outline has been fixed. Engineering samples and/or test data may be available. Commitment to produce in volume is not guaranteed.

• **North America** Tel: 800.366.2266 • **Europe** Tel: +353.21.244.6400
• **India** Tel: +91.80.4155721 • **China** Tel: +86.21.2407.1588
Visit www.macomtech.com for additional data sheets and product information.

M/A-COM Technology Solutions Inc. and its affiliates reserve the right to make changes to the product(s) or information contained herein without notice.

Typical Performance Curves at +25°C

Small Signal Gain

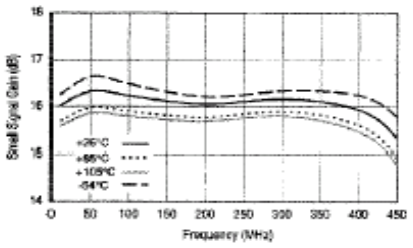

Noise Figure

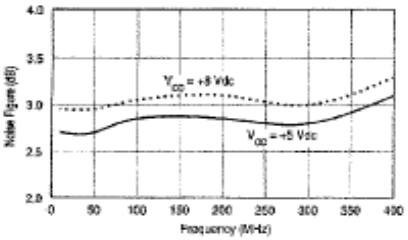

Power Output (1dB Gain Compression)

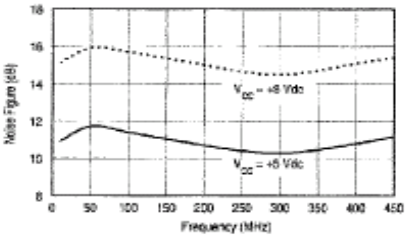

Intercept Point

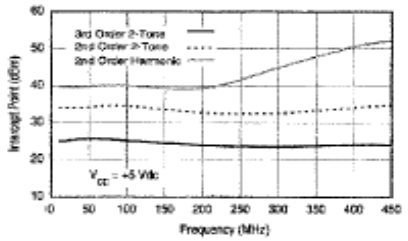

VSWR

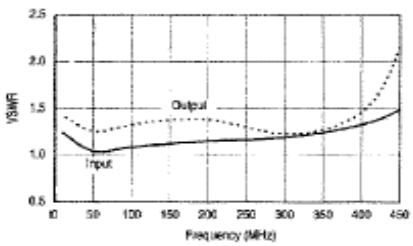

Outline Drawing: TO-8 *

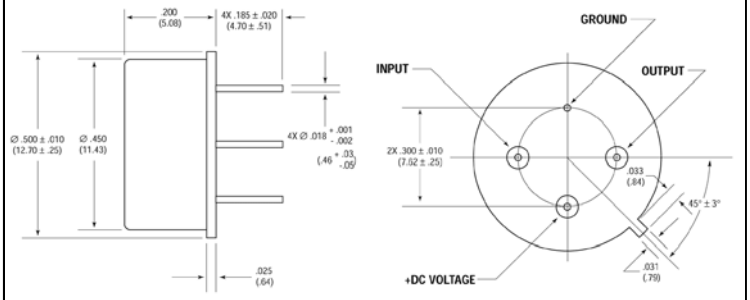

WEIGHT: 1 gram (0.04 oz.) max

Outline Drawing: Surface Mount *

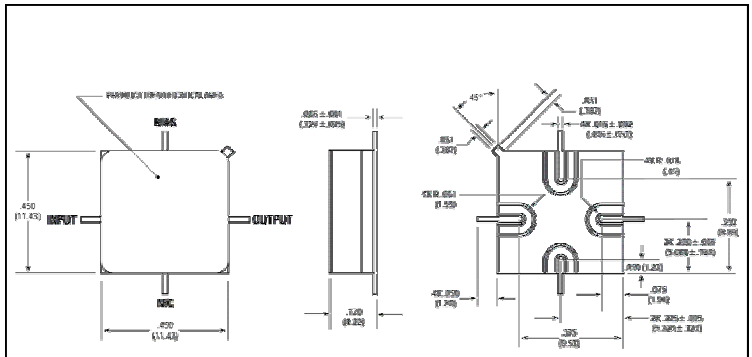

WEIGHT: 1 gram (0.04 oz.) max

Outline Drawing: SMA Connectorized *

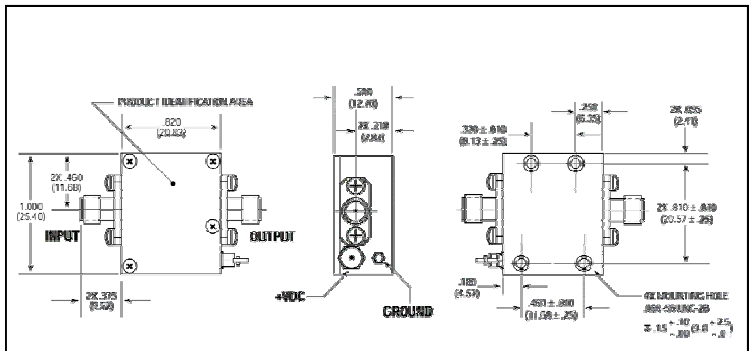

WEIGHT: 19 grams (0.67 oz.) max

* Dimensions are inches (millimeters) ±0.015 (0.38) unless otherwise specified.

ADVANCED: Data Sheets contain information regarding a product M/A-COM Technology Solutions is considering for development. Performance is based on target specifications, simulated results, and/or prototype measurements. Commitment to develop is not guaranteed.
PRELIMINARY: Data Sheets contain information regarding a product M/A-COM Technology Solutions has under development. Performance is based on engineering tests. Specifications are typical. Mechanical outline has been fixed. Engineering samples and/or test data may be available. Commitment to produce in volume is not guaranteed.

- **North America** Tel: 800.366.2266
- **Europe** Tel: +353.21.244.6400
- **India** Tel: +91.80.4155721
- **China** Tel: +86.21.2407.1588

Visit www.macomtech.com for additional data sheets and product information.

M/A-COM Technology Solutions Inc. and its affiliates reserve the right to make changes to the product(s) or information contained herein without notice.