Ordering number : ENA1431B

SMA3101

MMIC
Amplifier, 5V, 10mA, 0.1 to 3GHz, MCPH6

ON Semiconductor®
http://onsemi.com

Features

- High Gain : Gp=25dB typ. @1GHz
- Wideband response : fu=3.0GHz
- Low current : I_{CC}=10mA typ.
- Port impedance : input/output 50Ω

Specifications

Absolute Maximum Ratings at Ta=25°C

Parameter	Symbol	Conditions	Ratings	Unit
Supply Voltage	V_{CC}		6	V
Circuit Current	I_{CC}		25	mA
Allowable Power Dissipation	P_D		280	mW
Operating Temperature	Topr		−40 to +85	°C
Storage Temperature	Tstg		−55 to +150	°C

Stresses exceeding Maximum Ratings may damage the device. Maximum Ratings are stress ratings only. Functional operation above the Recommended Operating Conditions is not implied. Extended exposure to stresses above the Recommended Operating Conditions may affect device reliability.

Package Dimensions

unit : mm (typ)
7022A-018

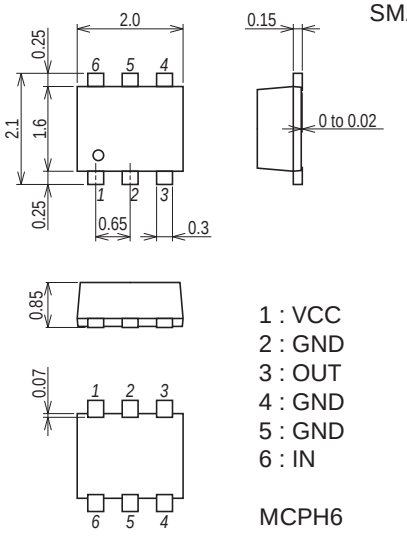

Product & Package Information

- Package : MCPH6
- JEITA, JEDEC : SC-88, SC-70-6, SOT-363
- Minimum Packing Quantity : 3,000 pcs./reel

Packing Type : TL

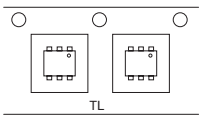

Marking

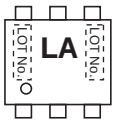

Recommended Operating Condition at Ta=25°C

Parameter	Symbol	Conditions	Ratings			Unit
			min	typ	max	
Supply Voltage	V_{CC}		4.5	5	5.5	V
Operating Ambient Temperature	Topr		−40	+25	+85	°C

Note) Pay attention to handling since it is liable to be affected by static electricity due to the high frequency process adopted.

Electrical Characteristics at Ta=25°C, V_{CC}=5V, Zs=Z_L=50Ω

Parameter	Symbol	Conditions	Ratings			Unit
			min	typ	max	
Circuit Current	I_{CC}		7.1	10.0	12.6	mA
Power Gain	Gp	f=1GHz	21.5	25.0	28.5	dB
		f=2.2GHz	21.5	25.5	28.5	
Isolation	ISL	f=1GHz	33.0	38.0		dB
		f=2.2GHz	31.0	36.0		
Input Return Loss	RLin	f=1GHz	11.0	16.0		dB
		f=2.2GHz	12.0	21.0		
Output Return Loss	RLout	f=1GHz	10.0	18.5		dB
		f=2.2GHz	8.0	12.0		
Noise Figure	NF	f=1GHz		4.0	5.3	dB
		f=2.2GHz		4.0	5.3	
Gain 1dB Compression Output Power	Po(1dB)	f=1GHz	−5.0	−2.0		dBm
		f=2.2GHz	−7.0	−4.0		
Upper Limit Operating Frequency	fu	3dB down below flat gain at f =1GHz		3.0		GHz

Ordering Information

Device	Package	Shipping	memo
SMA3101-TL-E	MCPH6	3,000pcs./reel	Pb Free

Equivalent Circuit

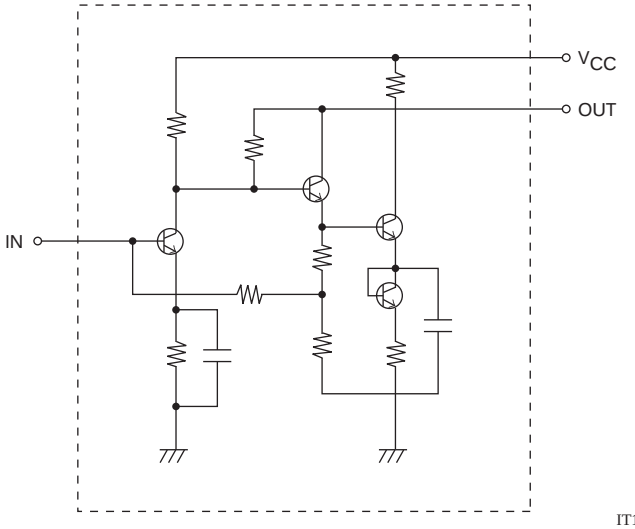

IT14496

Test Circuit

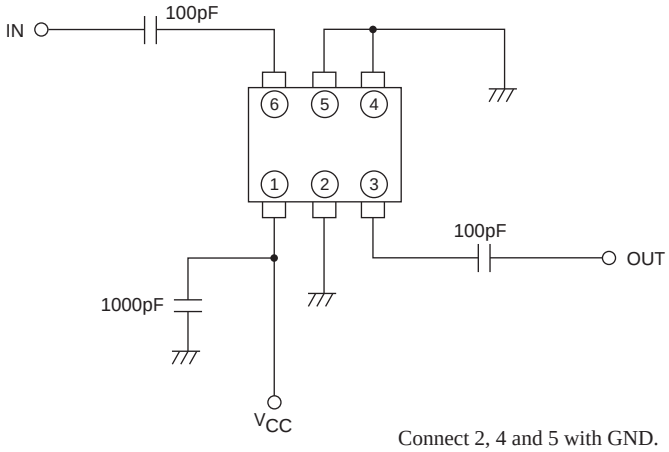

Connect 2, 4 and 5 with GND.

IT14497

Design of the Evaluation Board

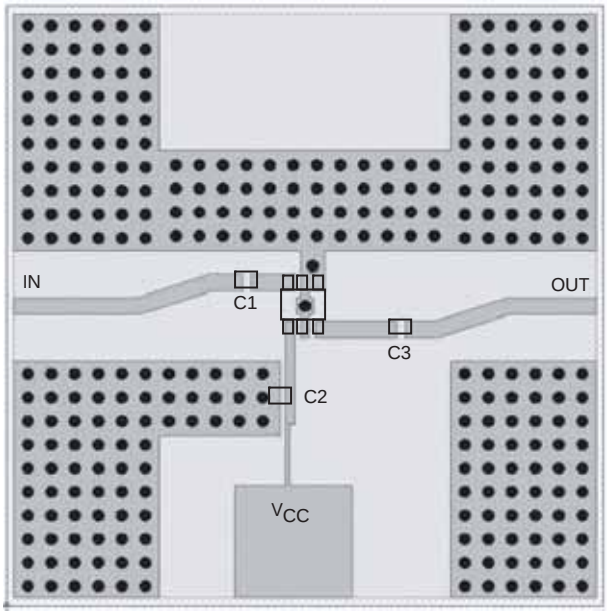

Symbol	Value
C1, C3	100pF
C2	1000pF

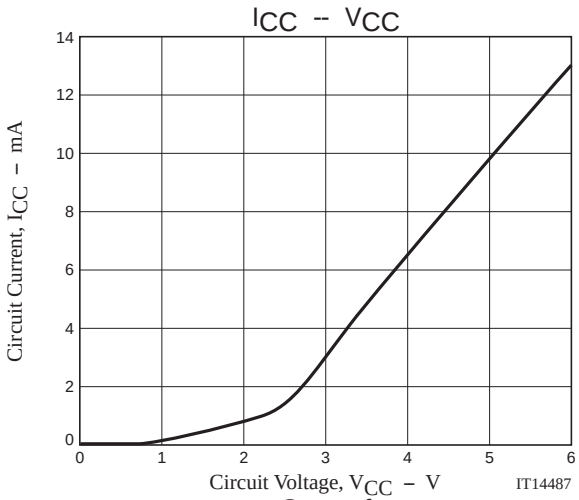
ICC -- VCC
Circuit Current, ICC – mA
Circuit Voltage, VCC – V
IT14487

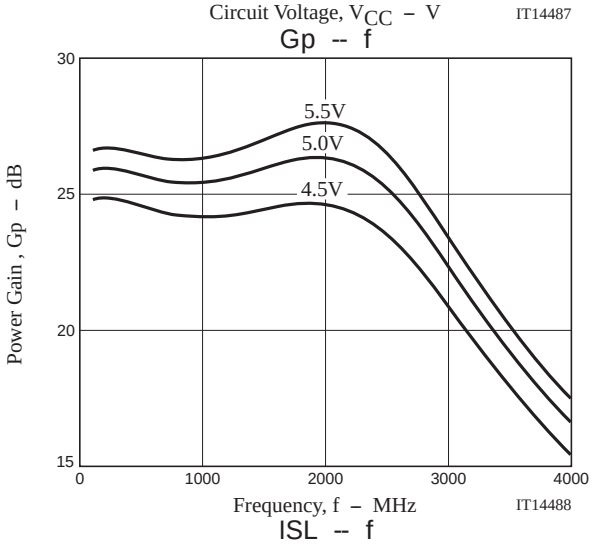
Gp -- f
5.5V
5.0V
4.5V
Power Gain , Gp – dB
Frequency, f – MHz
IT14488

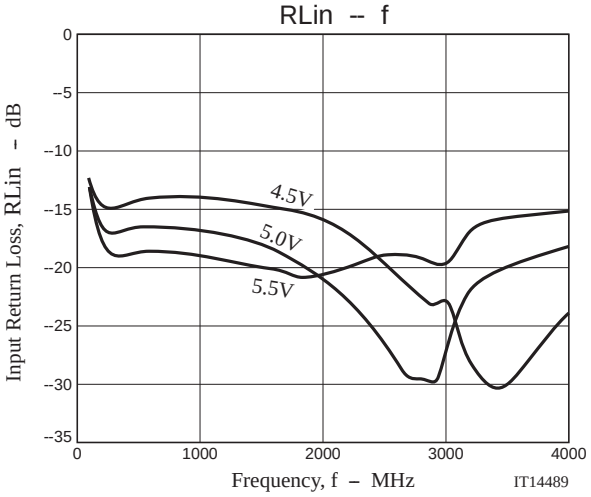
RLin -- f
4.5V
5.0V
5.5V
Input Return Loss, RLin – dB
Frequency, f – MHz
IT14489

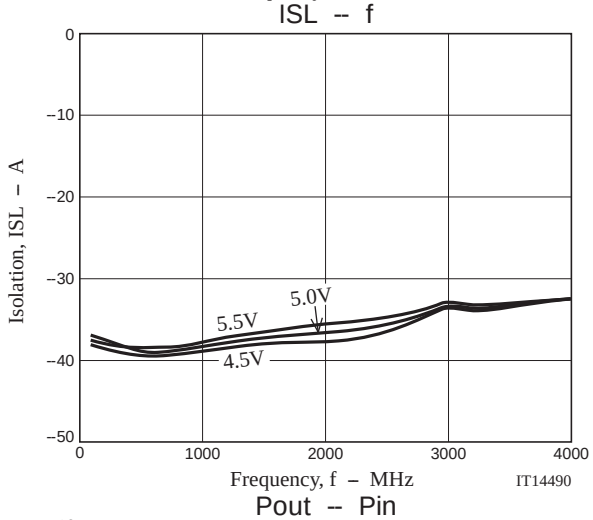
ISL -- f
5.0V
5.5V
4.5V
Isolation, ISL – A
Frequency, f – MHz
IT14490

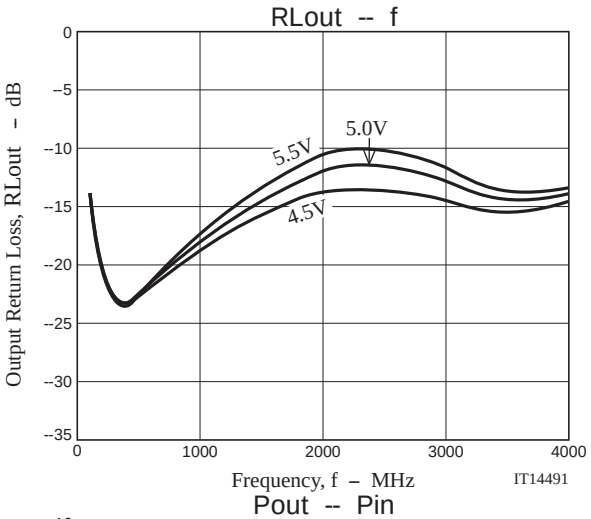
RLout -- f
5.0V
5.5V
4.5V
Output Return Loss, RLout – dB
Frequency, f – MHz
IT14491

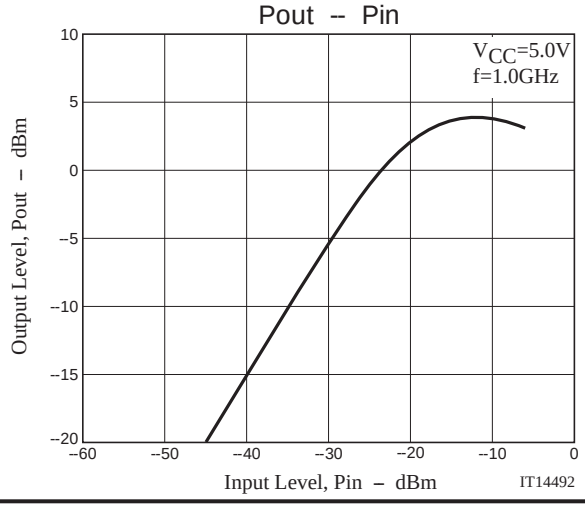
Pout -- Pin
VCC=5.0V
f=1.0GHz
Output Level, Pout – dBm
Input Level, Pin – dBm
IT14492

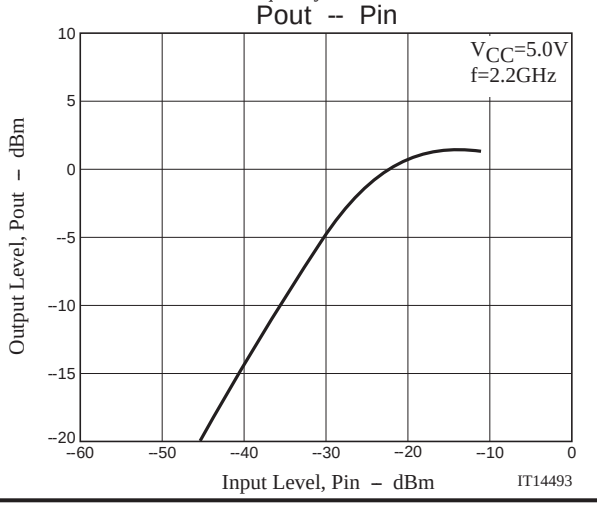
Pout -- Pin
VCC=5.0V
f=2.2GHz
Output Level, Pout – dBm
Input Level, Pin – dBm
IT14493

S Parameter

S11

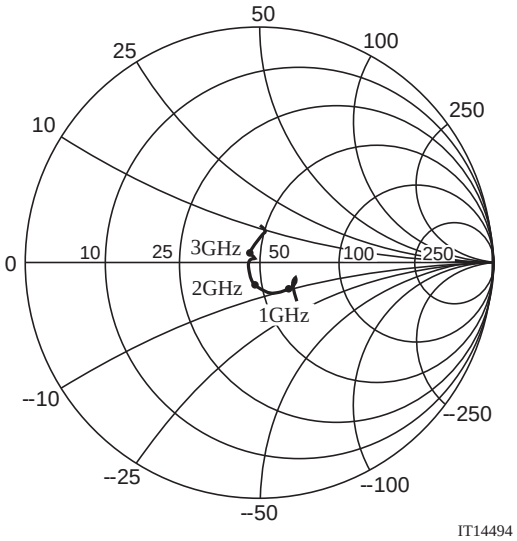

IT14494

S22

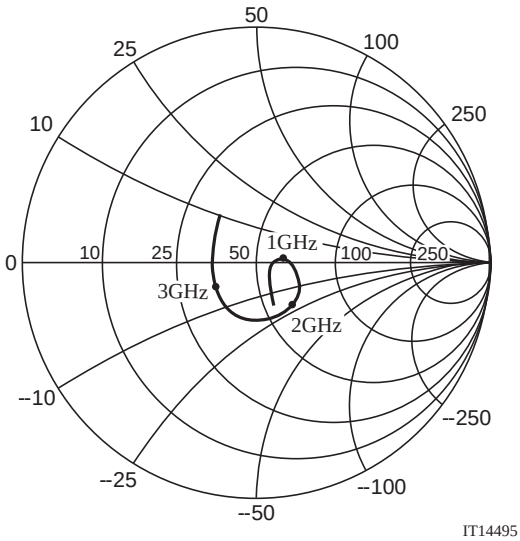

IT14495

Embossed Taping Specification

SMA3101-TL-E

1. Packing Format

Package Name	Carrier Tape Type	Maximun Number of devices contained (pcs)			Packing format	
		Reel	Inner box	Outer box	Inner BOX (C-1)	Outer BOX (A-7)
MCPH6	MCP4	3,000	15,000	90,000	5 reels contained Dimensions:mm (external) 183×72×185	6 inner boxes contained Dimensions:mm (external) 440×195×210

Packing method

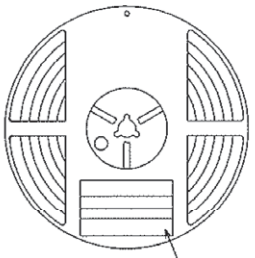

Reel label

Reel label, Inner box label

(unit:mm)

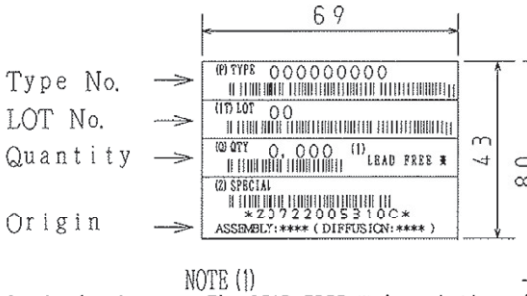

Outer box label

It is a label at the time of factory shipments. The form of a label may change in physical distribution process.

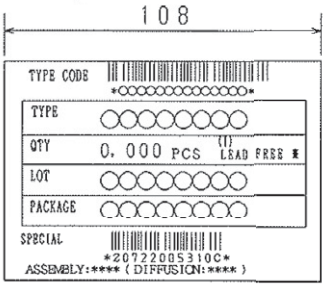

NOTE (1)
The LEAD FREE ※ description shows that the surface treatment of the terminal is lead free.

Label	JEITA Phase
LEAD FREE 3	JEITA Phase 3A
LEAD FREE 4	JEITA Phase 3

2. Taping configuration

2-1. Carrier tape size (unit:mm)

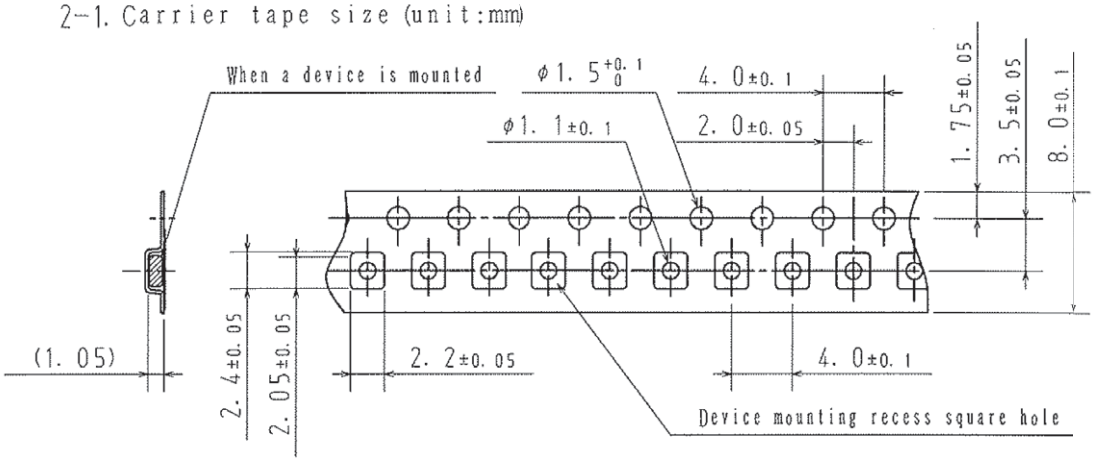

2-2. Device placement direction

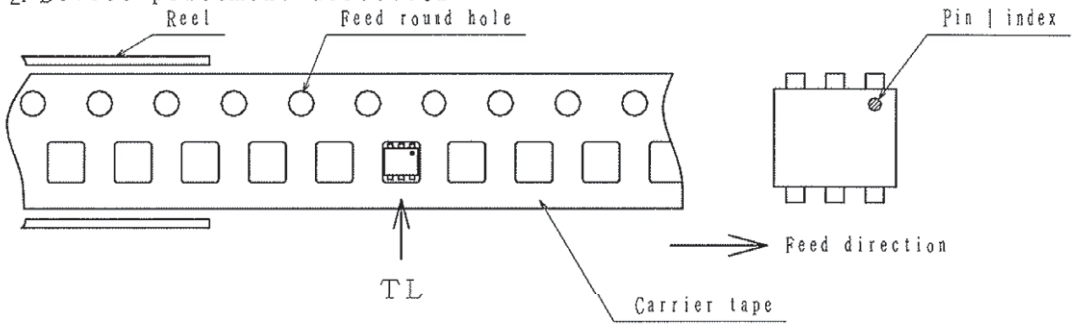

Those with pin 1 index on the feed hole side·····TL

Outline Drawing

SMA3101-TL-E

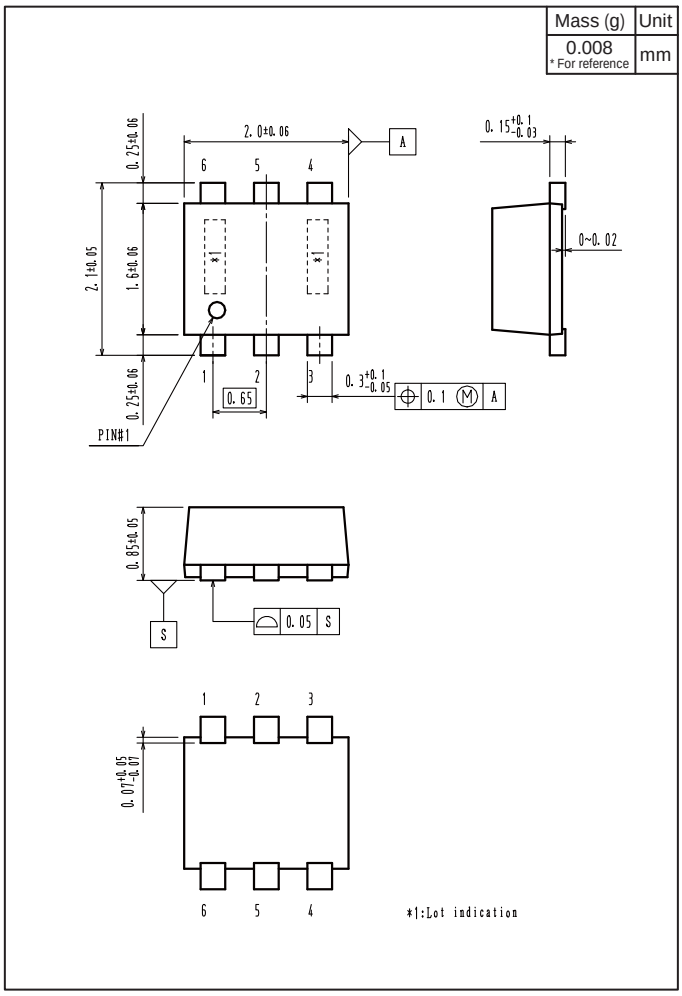

Land Pattern Example

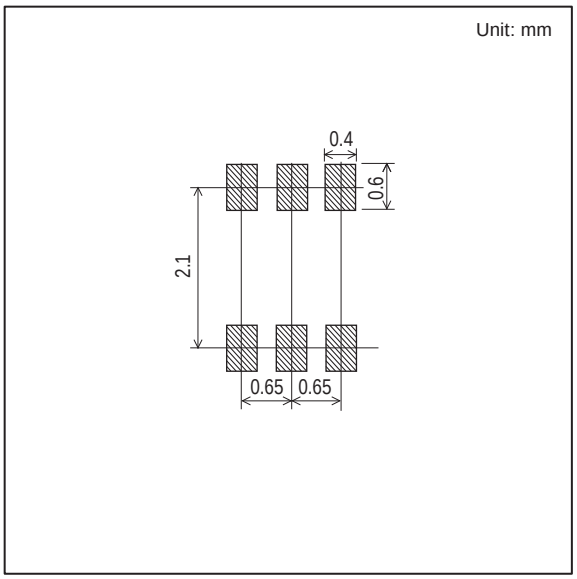

ON Semiconductor and the ON logo are registered trademarks of Semiconductor Components Industries, LLC (SCILLC). SCILLC owns the rights to a number of patents, trademarks, copyrights, trade secrets, and other intellectual property. A listing of SCILLC's product/patent coverage may be accessed at www.onsemi.com/site/pdf/Patent-Marking.pdf. SCILLC reserves the right to make changes without further notice to any products herein. SCILLC makes no warranty, representation or guarantee regarding the suitability of its products for any particular purpose, nor does SCILLC assume any liability arising out of the application or use of any product or circuit, and specifically disclaims any and all liability, including without limitation special, consequential or incidental damages. "Typical" parameters which may be provided in SCILLC data sheets and/or specifications can and do vary in different applications and actual performance may vary over time. All operating parameters, including "Typicals" must be validated for each customer application by customer's technical experts. SCILLC does not convey any license under its patent rights nor the rights of others. SCILLC products are not designed, intended, or authorized for use as components in systems intended for surgical implant into the body, or other applications intended to support or sustain life, or for any other application in which the failure of the SCILLC product could create a situation where personal injury or death may occur. Should Buyer purchase or use SCILLC products for any such unintended or unauthorized application, Buyer shall indemnify and hold SCILLC and its officers, employees, subsidiaries, affiliates, and distributors harmless against all claims, costs, damages, and expenses, and reasonable attorney fees arising out of, directly or indirectly, any claim of personal injury or death associated with such unintended or unauthorized use, even if such claim alleges that SCILLC was negligent regarding the design or manufacture of the part. SCILLC is an Equal Opportunity/Affirmative Action Employer. This literature is subject to all applicable copyright laws and is not for resale in any manner.