PLETRONICS
www.pletronics.com 425-776-1880



SM55 Series
Miniature SMD Crystal

January 2009

- The Pletronics' SM55 Series is a miniature surface mount crystal
- The package is ideal for automated surface mount assembly and reflow practices.
- Tape and Reel packaging
- 3 MHz to 70 MHz
- 5 x 13 x 5.7 mm 4 pad
- AT Cut Crystal

Pletronics Inc. certifies this device is in accordance with the RoHS 5/6 (2002/95/EC) and WEEE (2002/96/EC) directives.

Pletronics Inc. guarantees the device does not contain the following:
Cadmium, Hexavalent Chromium, Lead (<1000 ppm), Mercury, PBB's, PBDE's
Weight of the Device: 0.65 grams
Moisture Sensitivity Level: 1 As defined in J-STD-020C
Second Level Interconnect code: e1, e2 or e3

Electrical Specification:

Item	Min	Max	Unit	Condition	
Frequency Range	3	70	MHz	AT cut	
Calibration Frequency Tolerance	-	-	ppm	at +25°C ± 3°C	see table on page 3 for available options
Frequency Stability over OTR	-	-	ppm		
Equivalent Series Resistance (ESR)	-	200	Ohms	3 MHz to 4 MHz	Fundamental
	-	150	Ohms	4 MHz to 5 MHz	
	-	120	Ohms	5 MHz to 6 MHz	
	-	100	Ohms	6 MHz to 7 MHz	
	-	80	Ohms	7 MHz to 8 MHz	
	-	50	Ohms	8 MHz to13 MHz	
	-	40	Ohms	13 MHz to 30 MHz	
	-	100	Ohms	25 MHz to 70 MHz	3rd Overtone
Drive Level	-	1	mW	use 10 µW for testing	
Shunt Capacitance (C0)	-	7	pF	Pad to Pad capacitance	
Aging	-5	+5	ppm /Yr	at +25°C ± 3°C	
Specified Temperature Range	-40	+85	°C	see table on page 3 for available options	
Storage Temperature Range	-55	+125	°C		

Product information is current as of publication date. The product conforms to specifications per the terms of the Pletronics limited warranty. Production processsing does not necessarily include testing of all parameters.

Copyright © 2006, 2007, 2009, Pletronics Inc.

AT Cut Crystal Frequency versus Temperature Typical Performance:

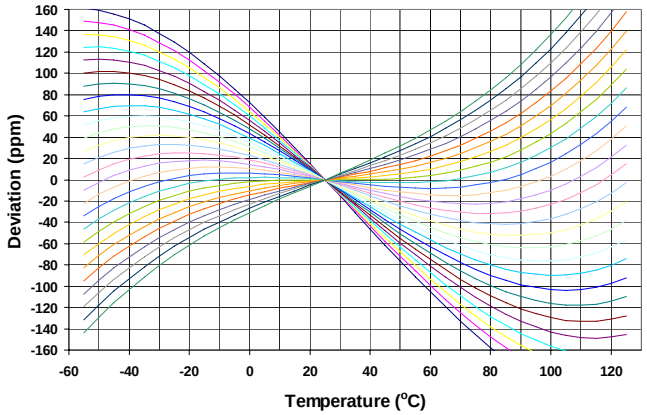

Part Marking:

1x*FFFFF*P*ymdz* **or** **L1x*FFFFzywwz***

Legend:

1 = Model code for SM55
x = Capacitance load code from below
FFFFF = Frequency coded
P or L = Pletronics
ymd or yww = Date of Manufacture (year, month and day) or year, week week
All other marking is internal factory codes

Some frequency marking examples: 3.579545M = 03579, 14.31818M = 14181, 24.0M = 24000

Specifications such as frequency tolerance and operating temperature range, etc. are not identified from the marking. External packaging labels and packing list will correctly identify the ordered Pletronics part number.

Code	A	B	C	D	E	F	G	H	J	K	L	M	N	P	Q	R	S	T	U	V	W	X	Y
pF	10	12	13	8	15	18	20	22	24	26	28	30	32	34	36	27	series	33	50	19	16	17	14

Codes for Date Code YMD

Code	6	7	8	9	0	1	2
Year	2006	2007	2008	2009	2010	2011	2012

Code	A	B	C	D	E	F	G	H	J	K	L	M
Month	JAN	FEB	MAR	APR	MAY	JUN	JUL	AUG	SEP	OCT	NOV	DEC

Code	1	2	3	4	5	6	7	8	9	A	B	C
Day	1	2	3	4	5	6	7	8	9	10	11	12
Code	D	E	F	G	H	J	K	L	M	N	P	R
Day	13	14	15	16	17	18	19	20	21	22	23	24
Code	T	U	V	W	X	Y	Z					
Day	25	26	27	28	29	30	31					

SM55 Series
Miniature SMD Crystal

January 2009

Part Number:

SM55	-18	-14.31818M	-50	H	1	G	G	-XX

See chart below for available options

Internal code or blank
Highest Specified Operating Temperature **A** = 40°C **G** = 70°C **B** = 45°C **H** = 75°C **C** = 50°C **J** = 80°C **D** = 55°C **K** = 85°C **E** = 60°C **F** = 65°C
Lowest Specified Operating Temperature **A** = +10°C **F** = -15°C **L** = -40°C **B** = +5°C **G** = -20°C **C** = 0°C **H** = -25°C **D** = -5°C **J** = -30°C **E** = -10°C **K** = -35°C
Mode: **1** = Fundamental **3** =3rd Overtone
Frequency Stability See chart below
Calibration Frequency Tolerance **15** = ± 15 ppm at 25°C ± 3°C **20** = ± 20 ppm at 25°C ± 3°C **30** = ± 30 ppm at 25°C ± 3°C (Standard)
Frequency in MHz
Cload in pF Parallel Resonance from **09** to **44** pF or **SR** = Series Resonance
Series Model

Operating Temperature Range		Available Frequency Stability versus Temperature in ppm					
		D	**E**	**F**	**G**	**H**	**J**
	CODE	± 10	± 15	± 20	± 30	± 50	± 100
0 to +45°C	**CB**	●	●	●	●	●	●
0 to +50°C	**CC**	●	●	●	●	●	●
0 to +60°C	**CE**	●	●	●	●	●	●
0 to +70°C	**CG**	●	●	●	●	**STD**	●
-10 to +50°C	**EC**	●	●	●	●	●	●
-10 to +60°C	**EE**	●	●	●	●	●	●
-10 to +75°C	**EH**	●	●	●	●	●	●
-20 to +70°C	**GG**	●	●	●	●	●	●
-20 to +75°C	**GH**	●	●	●	●	●	●
-30 to +75°C	**JH**	●	●	●	●	●	●
-30 to +80°C	**JJ**	●	●	●	●	●	●
-30 to +85°C	**JK**	●	●	●	●	●	●
-35 to +80°C	**KJ**		●	●	●	●	●
-40 to +85°C	**LK**		●	●	●	●	●

Legacy Part Number (not for new designs):

SM55	B	E	-18	-11.0592M	-XX

Internal code or blank
Frequency in MHz
Cload in pF Parallel Resonance in pF or **SR** = Series Resonance
Operating Temperature Range Blank = 0 to + 70°C (STD) **E** = -40 to +85°C
Calibration Tolerance / Frequency Stability Blank = 30/50 (STD) **B** = 30/30 **C** = 15/30 **D** = 10/20 (not all frequencies)
Series Model

Reliability: Environmental Compliance

Parameter	Condition
Mechanical Shock	MIL-STD-883 Method 2002, Condition B
Vibration	MIL-STD-883 Method 2007, Condition A
Solderability	MIL-STD-883 Method 2003
Thermal Shock	MIL-STD-883 Method 1011, Condition A

Package Labeling

Label is 1" x 2.6" (25.4mm x 66.7mm)
Font is Courier New
Bar code is 39-Full ASCII



Label is 1" x 2.6" (25.4mm x 66.7mm)
Font is Arial

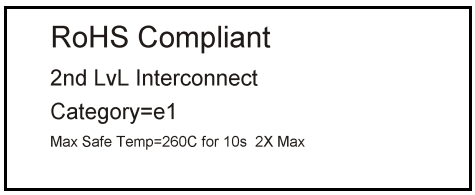

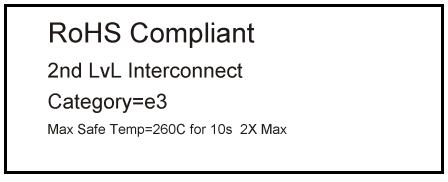

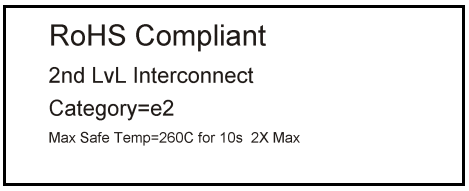

Mechanical:

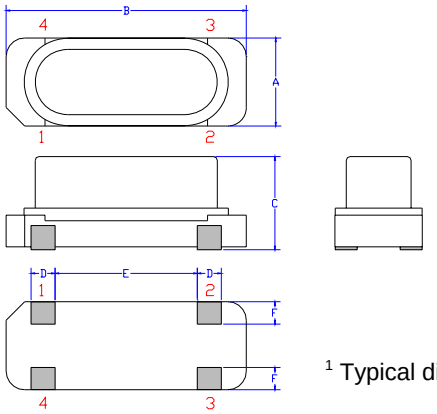

	Inches	mm
A	0.189 max	4.8 max
B	0.512 max	13.0 max
C	0.224 max	5.7 max
D[1]	0.051	1.3
E[1]	0.303	7.7
F[1]	0.047	1.2

Not to Scale

[1] Typical dimensions

Contacts : Matte Tin (Sn) -or- Tin over Copper (SnCu) or SAC (SnAgCu)

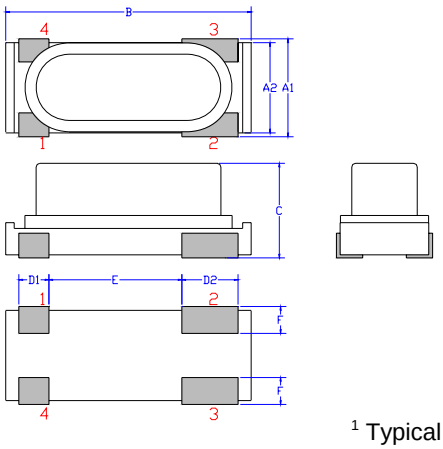

	Inches	mm
A_1	0.197 max	5.0 max
A_2	0.181	4.6
B	0.516 max	13.1 max
C	0.224 max	5.7 max
D_1[1]	0.063	1.6
D_2[1]	0.118	3.0
E[1]	0.280	7.1
F[1]	0.039	1.0

Not to Scale

[1] Typical dimensions

Contacts : Matte Tin (Sn) -or- Tin over Copper (SnCu) or SAC (SnAgCu)

Connection (bottom view) Pin 2 & 3 connected to metal case:

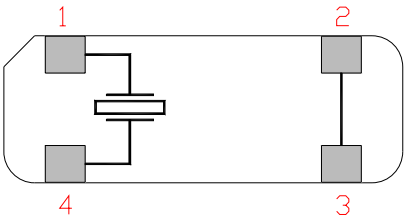

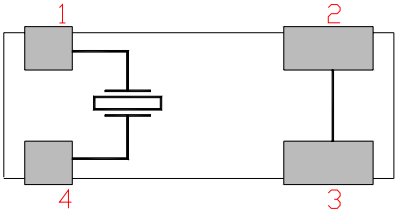

Layout and application information

- Trace lengths to the crystal should be kept as short as possible.
- The crystal connections are sensitive to noise.
- The package should be grounded for optimum performance.

Reflow Cycle (typical for lead free processing)

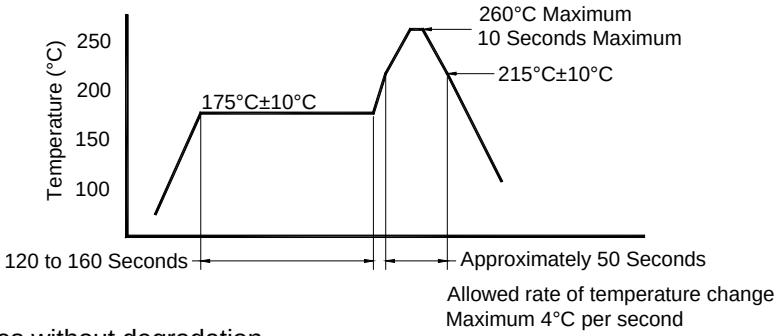

The part may be reflowed 2 times without degradation.

Tape and Reel: available for quantities of 1000 per reel

Constant Dimensions Table 1

Tape Size	D0	D1 Min	E1	P0	P2	S1 Min	T Max	T1 Max
8mm	1.5 +0.1 -0.0	1.0	1.75 ±0.1	4.0 ±0.1	2.0 ±0.05	0.6	0.25	0.1
12mm		1.5						
16mm		1.5			2.0 ±0.1			
24mm		1.5						

Variable Dimensions Table 2

Tape Size	B1 Max	E2 Min	F	P1	T2 Max	W Max	Ao, Bo & Ko
24 mm	18	14.25	7.5 ±0.1	12.0 ±0.1	8	16.3	Note 1

Note 1: Embossed cavity to conform to EIA-481-B Dimensions in mm Not to scale

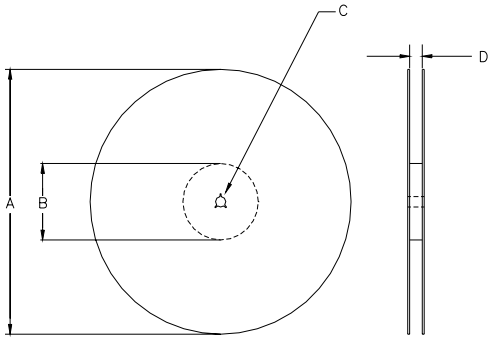

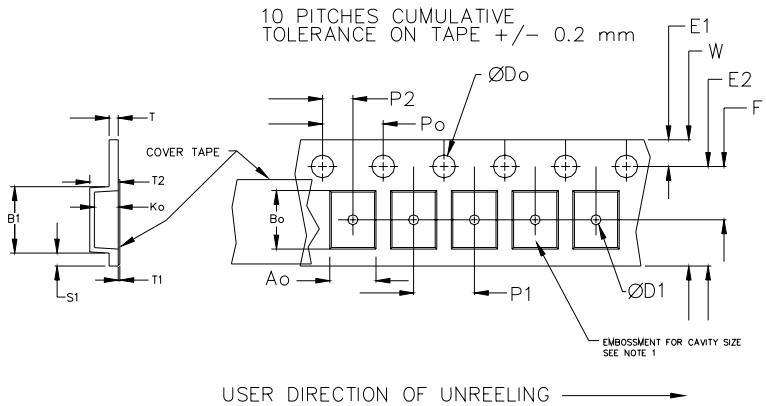

		REEL DIMENSIONS			
A	inches	7.0	10.0	13.0	
	mm	177.8	254.0	330.2	
B	inches	2.50	4.00	3.75	
	mm	63.5	101.6	95.3	Tape Width
C	mm	13.0 +0.5 / -0.2			
D	mm	24.4 +2.0 -0.0	24.4 +2.0 -0.0	24.4 +2.0 -0.0	24.0

Reel dimensions may vary from the above

IMPORTANT NOTICE

Pletronics Incorporated (PLE) reserves the right to make corrections, improvements, modifications and other changes to this product at anytime. PLE reserves the right to discontinue any product or service without notice. Customers are responsible for obtaining the latest relevant information before placing orders and should verify that such information is current and complete. All products are sold subject to PLE's terms and conditions of sale supplied at the time of order acknowledgment.

PLE warrants performance of this product to the specifications applicable at the time of sale in accordance with PLE's limited warranty. Testing and other quality control techniques are used to the extent PLE deems necessary to support this warranty. Except where mandated by specific contractual documents, testing of all parameters of each product is not necessarily performed.

PLE assumes no liability for application assistance or customer product design. Customers are responsible for their products and applications using PLE components. To minimize the risks associated with the customer products and applications, customers should provide adequate design and operating safeguards.

PLE products are not designed, intended, authorized or warranted to be suitable for use in life support applications, devices or systems or other critical applications that may involve potential risks of death, personal injury or severe property or environmental damage. Inclusion of PLE products in such applications is understood to be fully at the risk of the customer. Use of PLE products in such applications requires the written approval of an appropriate PLE officer. Questions concerning potential risk applications should be directed to PLE.

PLE does not warrant or represent that any license, either express or implied, is granted under any PLE patent right, copyright, artwork or other intellectual property right relating to any combination, machine or process which PLE product or services are used. Information published by PLE regarding third-party products or services does not constitute a license from PLE to use such products or services or a warranty or endorsement thereof. Use of such information may require a license from a third party under the patents or other intellectual property of the third party, or a license from PLE under the patents or other intellectual property of PLE.

Reproduction of information in PLE data sheets or web site is permissible only if the reproduction is without alteration and is accompanied by associated warranties, conditions, limitations and notices. Reproduction of this information with alteration is an unfair and deceptive business practice. PLE is not responsible or liable for such altered documents.

Resale of PLE products or services with statements different from or beyond the parameters stated by PLE for that product or service voids all express and implied warranties for the associated PLE product or service and is an unfair or deceptive business practice. PLE is not responsible for any such statements.

Contacting Pletronics Inc.

Pletronics Inc.
19013 36th Ave. West
Lynnwood, WA 98036-5761 USA

Tel: 425-776-1880
Fax: 425-776-2760
E-mail: ple-sales@pletronics.com
URL: www.pletronics.com

Copyright © 2005, 2006, 2007, 2008, 2009 Pletronics Inc.