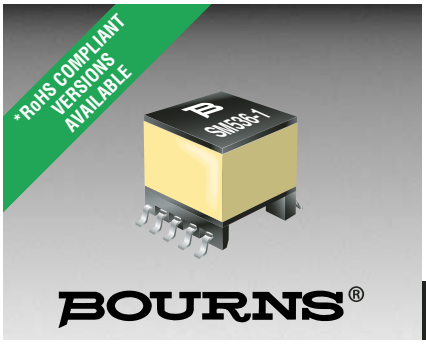

Features

- For use with Globespan G7000 ADSL chipset in customer premise applications
- Excellent Total Harmonic Distortion (THD) performance in a small size
- SMT and small size package
- Operating temperature -40 °C to +85 °C
- Designed to meet UL1950 and EN60950 supplementary insulation requirements for operating voltages up to 250 Vrms
- Lead free version available (see How to Order)
- Lead free versions are RoHS compliant*

Applications

- ADSL - Globespan G7000

SM536-1 ADSL Line Transformers

Electrical Specifications @ 25 °C

Turns Ratio .....1:1 ±2 %
OCL @ 10 kHz, 0.1 V
(1-5) with (2-4) shorted
.....430 µH ±10 %
(10-6) with (9-7) shorted
.....430 µH ±10 %
Leakage Inductance @ 100 kHz 0.1 V
(1-5) with (2-4), (7-9), (10-6) shorted
.....10.0 µH max.
Longitudinal Balance
25 kHz to 1.1 MHz .....40 dB min.
Insertion Loss @ 772 kHz .....< 0.5 dB
Isolation Voltage .....1875 Vrms max.
Load Resistance .....100 Ω
DC Resistance
(1-4) = (2-5) .....0.45 Ω max.
(10-7) = (9-6) .....0.35 Ω max.
THD Linearity @ 100 kHz.....-80 dB typ.

Packaging Specifications

Tape & Reel* .....200 pcs./reel

*"E" suffix at end of part number designates tape & reel packaging, e.g. SM536-1E.

Product Dimensions

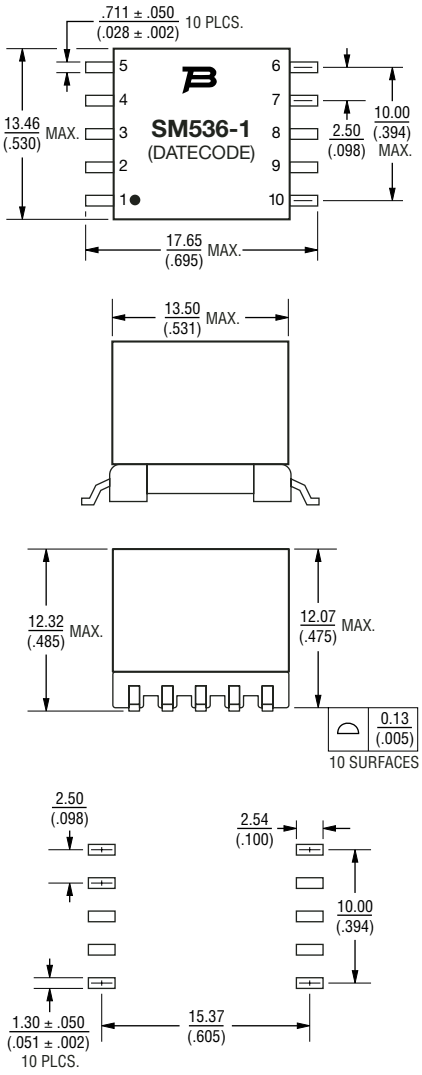

Recommended PAD layout

DIMENSIONS ARE: MM (INCHES)

TOLERANCE: ± 0.25 (.010)

Electrical Schematic

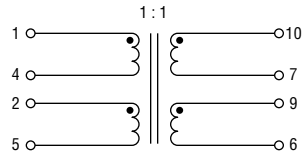

How to Order

SM536-1E

Model
Termination
Blank = Tin-lead
L = Tin only (lead free)

03/05

*RoHS Directive 2002/95/EC Jan 27 2003 including Annex
Specifications are subject to change without notice.
Customers should verify actual device performance in their specific applications.