SM4205

Optically Coupled
MOSFET Driver
w/Discharge Circuit

Description

The SM4205 consists of an input drive LED optically coupled to a photodiode array output designed to drive highly capacitive loads, including the gate of a power MOSFET. The active discharge circuit of the PDA assures quick discharge of MOSFETs, providing fast turn-off times. This device can be used in a wide variety of applications for which high levels of input are required for a MOSFET output.

The SM4205 comes standard in a miniature 4 pin SOP package.

Applications

- Isolated means to drive discrete power MOSFETs
- Lighting Controls
- Process Control Modules
- Solid State Relays
- Solenoid Controls

Schematic Diagram

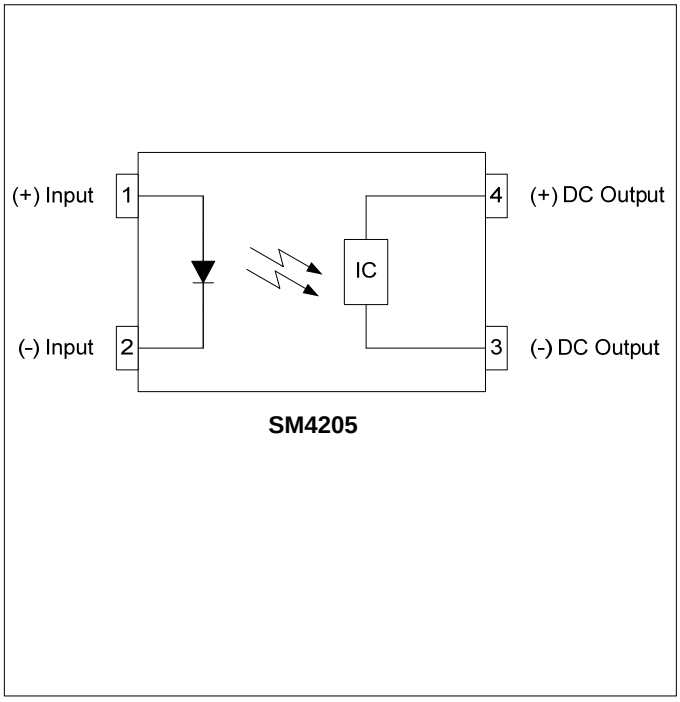

SM4205

Features

- Miniature 4 pin SOP package
- Built in active discharge circuit for fast turn-off
- Fast Turn-On
- 6.5V Gate Drive Voltage
- High Input-to-Output Isolation ($1.5kV_{RMS}$)
- Long Life / High Reliability
- RoHS / Pb-Free / REACH Compliant

Agency Approvals

UL / C-UL:	File # E201932
VDE:	File # 40035191 (EN 60747-5-2)

Absolute Maximum Ratings

The values indicated are absolute stress ratings. Functional operation of the device is not implied at these or any conditions in excess of those defined in electrical characteristics section of this document. Exposure to absolute Maximum Ratings may cause permanent damage to the device and may adversely affect reliability.

Storage Temperature	-55 to +125°C
Operating Temperature	-40 to +85°C
Continuous Input Current	50mA
Transient Input Current	500mA
Reverse Input Control Voltage	5V
Input Power Dissipation	70mW
Total Power Dissipation	170mW
Solder Temperature – Wave (10sec)	260°C
Solder Temperature – IR Reflow (10sec)	260°C

Ordering Information

Part Number	Description
SM4205	4 pin SOP, (100/Tube)
SM4205-TR	4 pin SOP, Tape and Reel (2000/Reel)

NOTES: Suffixes listed above are not included in marking on device for part number identification

© 2013 Solid State Optronics • San José, CA

Electrical Characteristics, T_A = 25°C (unless otherwise specified)

Parameter	Symbol	Min.	Typ.	Max.	Units	Test Conditions
Input Specifications						
LED Forward Voltage	V_F	-	2.8	3.5	V	I_F = 10mA
LED Reverse Voltage	BV_R	5	-	-	V	I_R = 10µA
Reverse Leakage Current	$I_{InRleak}$	-	-	10	µA	V_R = 5V
Turn-On Current	I_F	-	5	10	mA	V_{OUT} = 5V
Turn-Off Current	$I_{F(OFF)}$	-	0.5	-	mA	V_{OUT} = 2V
Output Specifications						
Open Circuit Voltage	V_{OC}	6.5	7	-	V	I_F = 10mA
Short Circuit Voltage	I_{SC}	20	25	-	µA	I_F = 10mA
Isolation Specifications						
Isolation Voltage	V_{ISO}	1500	-	-	V_{RMS}	RH ≤ 50%, t=1min
Input-Output Resistance	R_{I-O}	-	10^{12}	-	Ω	V_{I-O} = 500V_{DC}

© 2013 Solid State Optronics • San José, CA

SM4205 Solder Reflow Temperature Profile Recommendations

(1) *Infrared Reflow:*

Refer to the following figure as an example of an optimal temperature profile for single occurrence infrared reflow. Soldering process should not exceed temperature or time limits expressed herein. Surface temperature of device package should not exceed 250ºC:

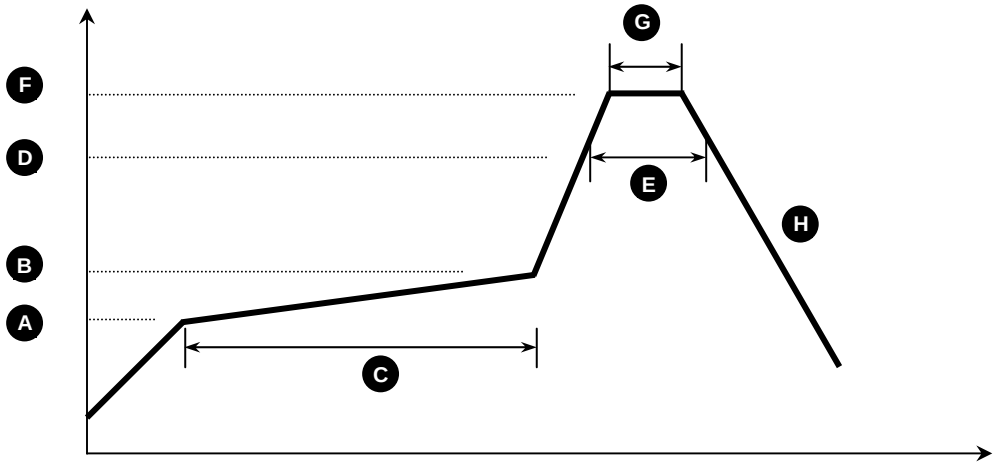

Process Step	Description	Parameter
A	Preheat Start Temperature (ºC)	150ºC
B	Preheat Finish Temperature (ºC)	180ºC
C	Preheat Time (s)	90 - 120s
D	Melting Temperature (ºC)	230ºC
E	Time above Melting Temperature (s)	30s
F	Peak Temperature, at Terminal (ºC)	260ºC
G	Dwell Time at Peak Temperature (s)	10s
H	Cool-down (ºC/s)	<6ºC/s

(2) *Wave Solder:*

Maximum Temperature:	260ºC (at terminal)
Maximum Time:	10s
Pre-heating:	100 - 150ºC (30 - 90s)
Single Occurrence	

(3) *Hand Solder:*

Maximum Temperature:	350ºC (at tip of soldering iron)
Maximum Time:	3s
Single Occurrence	

© 2013 Solid State Optronics • San José, CA

SM4205 Package Dimensions

4 PIN SOP Package

Note: *All dimensions in millimeters [mm]*

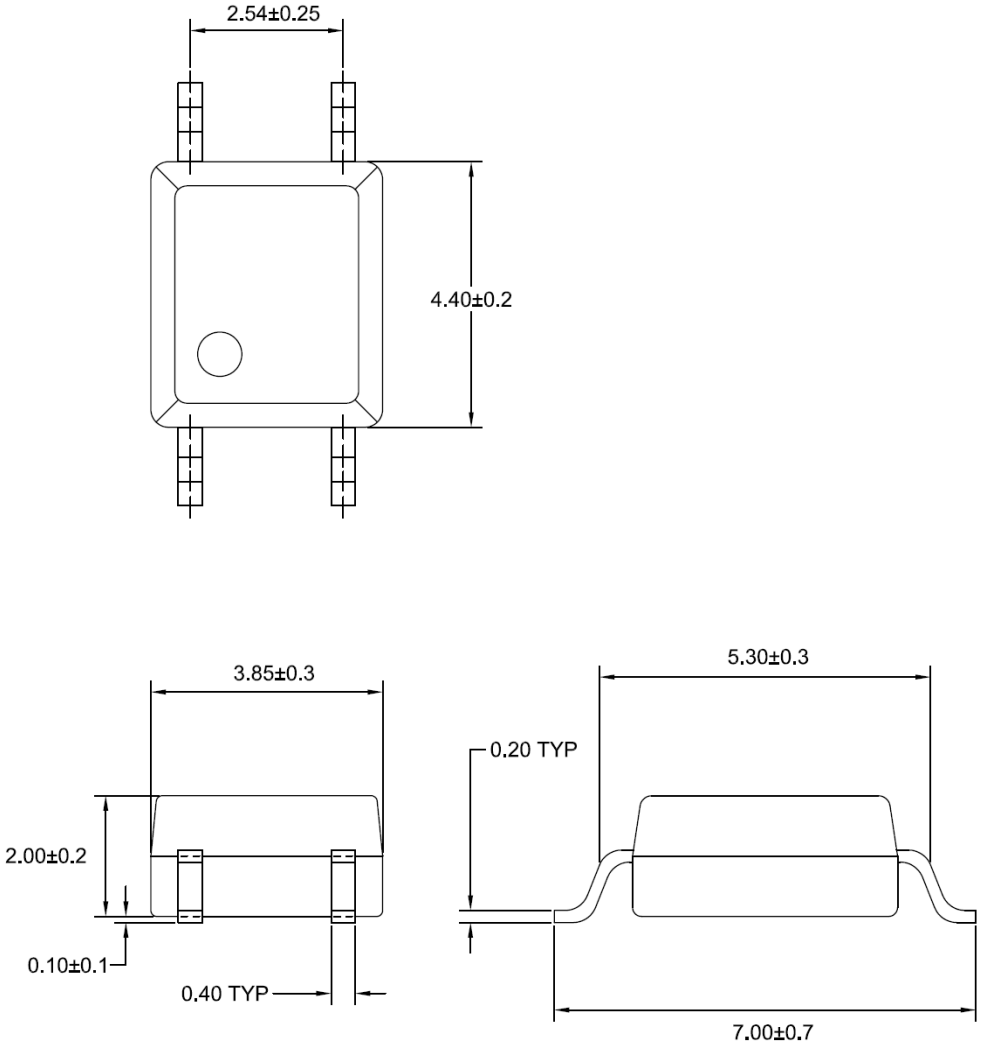

4 PIN SOP Footprint

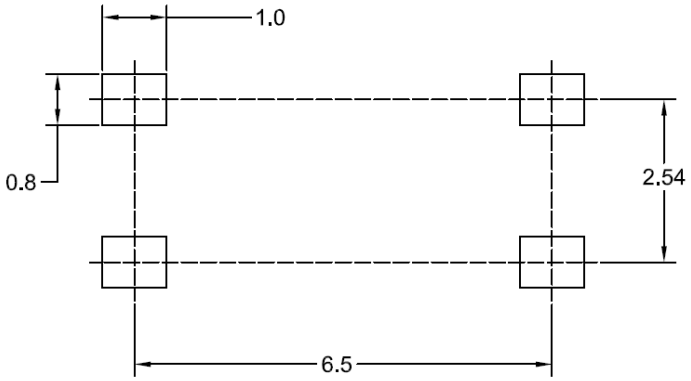

© 2013 Solid State Optronics • San José, CA

SM4205 Packaging Specifications

Tape & Reel Specifications (T&R)

Note: *All dimensions in millimeters [mm]*

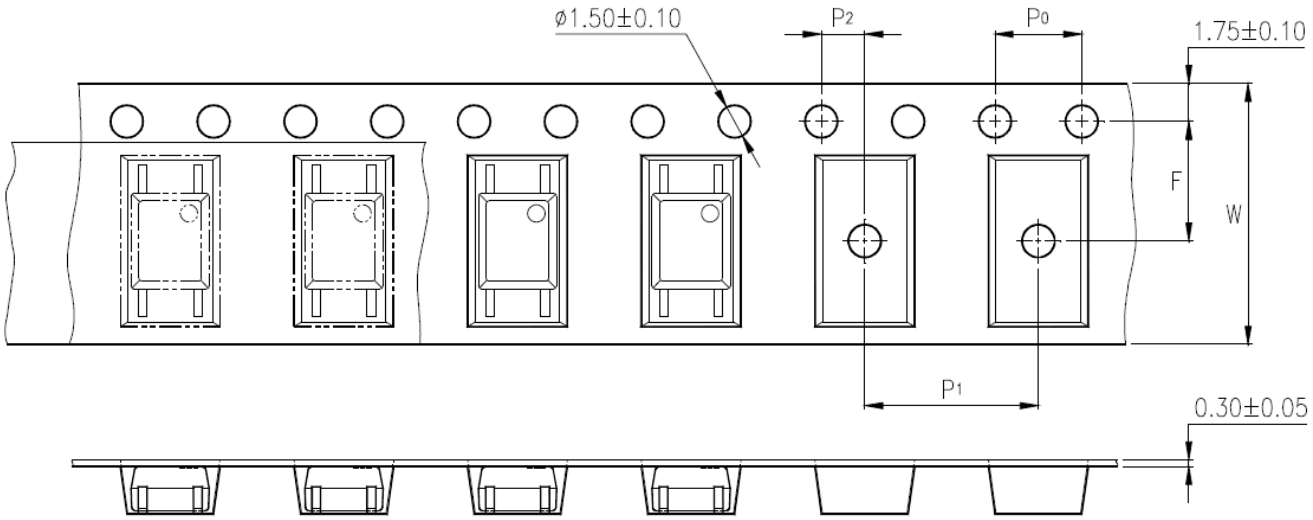

Specification	Symbol	Dimensions, mm (inches)
Tape Width	W	12 ± 0.3 (0.47)
Sprocket Hole Pitch	P0	4 ± 0.1 (0.15)
Compartment Location	F P2	5.5 ± 0.1 (0.217) 2 ± 0.1 (0.079)
Compartment Pitch	P1	8 ± 0.1 (0.315)

© 2013 Solid State Optronics • San José, CA

SM4205 Packaging Specifications

Tape & Reel Specifications (T&R)

Note: *All dimensions in millimeters [mm*

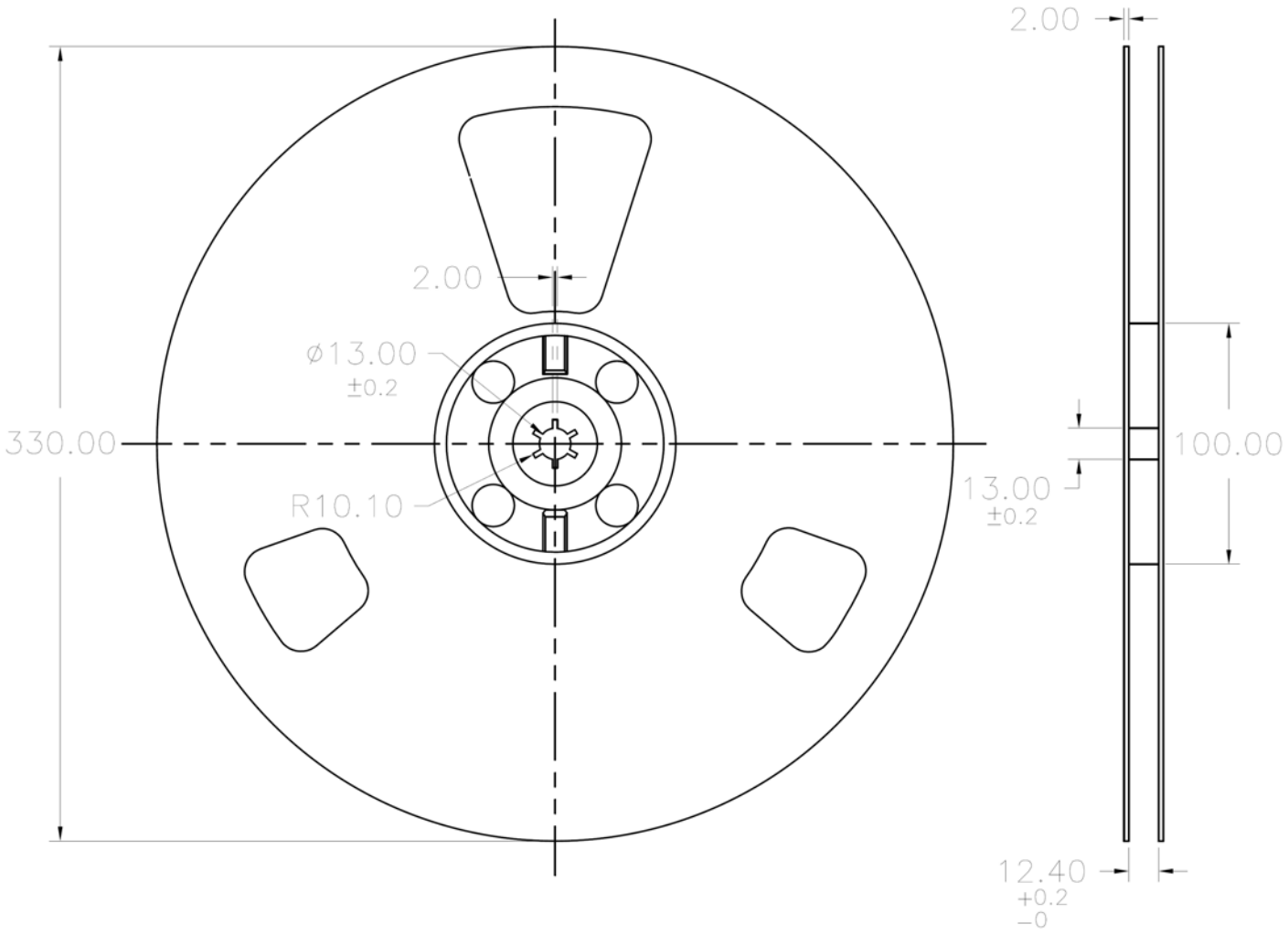

SM4205 Package Marking

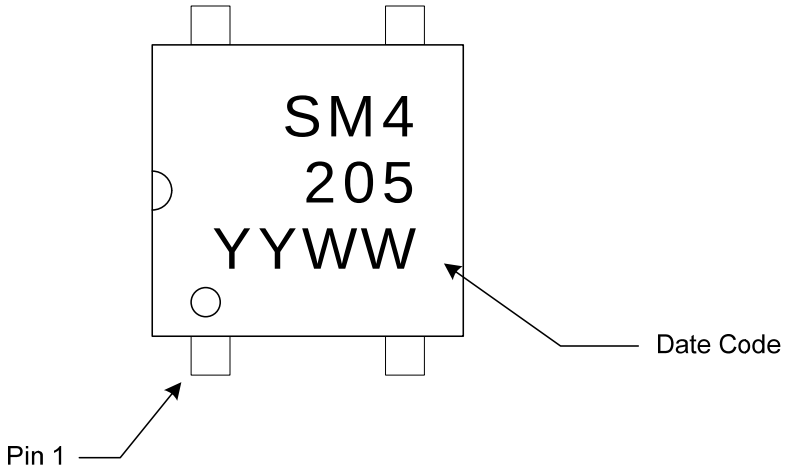

SM4205 Package Weights

Device	Single Unit	Full Tube (100pcs)	Full Pouch (10 tubes)	Full Reel (2000pcs)
SM4205	0.10	23	240	-
SM4205-TR	0.10	-	-	500

Note: *All weights above are in GRAMS, and include packaging materials where applicable*

DISCLAIMER

Solid State Optronics (SSO) makes no warranties or representations with regards to the completeness and accuracy of this document. SSO reserves the right to make changes to product description, specifications at any time without further notices.
SSO shall not assume any liability arising out of the application or use of any product or circuit described herein. Neither circuit patent licenses nor indemnity are expressed or implied.
Except as specified in SSO's Standard Terms & Conditions, SSO disclaims liability for consequential or other damage, and we make no other warranty, expressed or implied, including merchantability and fitness for particular use.

LIFE SUPPORT POLICY

SSO does not authorize use of its devices in life support applications wherein failure or malfunction of a device may lead to personal injury or death. Users of SSO devices in life support applications assume all risks of such use and agree to indemnify SSO against any and all damages resulting from such use. Life support devices are defined as devices or systems which, (a) are intended for surgical implant into the body, or (b) support or sustain life, and (c) whose failure to perform when used properly in accordance with instructions for use can be reasonably expected to result in significant injury to the user, or (d) a critical component of a life support device or system whose failure can be reasonably expected to cause failure of the life support device or system, or to affect its safety or effectiveness.